FANUC

GE Fanuc Automation

Computer Numerical Control Products

Series 16i/160i/160is-Model B
Series 18i/180i/180is-Model B
Series 21i/210i/210is-Model B

Maintenance Manual

GFZ-63525EN/02 *April 2002*

Warnings, Cautions, and Notes as Used in this Publication

Warning

Warning notices are used in this publication to emphasize that hazardous voltages, currents, temperatures, or other conditions that could cause personal injury exist in this equipment or may be associated with its use.

In situations where inattention could cause either personal injury or damage to equipment, a Warning notice is used.

Caution

Caution notices are used where equipment might be damaged if care is not taken.

Note

Notes merely call attention to information that is especially significant to understanding and operating the equipment.

This document is based on information available at the time of its publication. While efforts have been made to be accurate, the information contained herein does not purport to cover all details or variations in hardware or software, nor to provide for every possible contingency in connection with installation, operation, or maintenance. Features may be described herein which are not present in all hardware and software systems. GE Fanuc Automation assumes no obligation of notice to holders of this document with respect to changes subsequently made.

GE Fanuc Automation makes no representation or warranty, expressed, implied, or statutory with respect to, and assumes no responsibility for the accuracy, completeness, sufficiency, or usefulness of the information contained herein. No warranties of merchantability or fitness for purpose shall apply.

©Copyright 2002 GE Fanuc Automation North America, Inc.

All Rights Reserved.

SAFETY PRECAUTIONS

This section describes the safety precautions related to the use of CNC units. It is essential that these precautions be observed by users to ensure the safe operation of machines equipped with a CNC unit (all descriptions in this section assume this configuration).
CNC maintenance involves various dangers. CNC maintenance must be undertaken only by a qualified technician.
Users must also observe the safety precautions related to the machine, as described in the relevant manual supplied by the machine tool builder.
Before checking the operation of the machine, take time to become familiar with the manuals provided by the machine tool builder and FANUC.

Contents

1. DEFINITION OF WARNING, CAUTION, AND NOTE s–2

2. WARNINGS RELATED TO CHECK OPERATION s–3

3. WARNINGS RELATED TO REPLACEMENT s–5

4. WARNINGS RELATED TO PARAMETERS s–6

5. WARNINGS AND NOTES RELATED TO DAILY MAINTENANCE s–7

1 DEFINITION OF WARNING, CAUTION, AND NOTE

This manual includes safety precautions for protecting the maintenance personnel (herein referred to as the user) and preventing damage to the machine. Precautions are classified into Warnings and Cautions according to their bearing on safety. Also, supplementary information is described as a Note. Read the Warning, Caution, and Note thoroughly before attempting to use the machine.

WARNING

Applied when there is a danger of the user being injured or when there is a danger of both the user being injured and the equipment being damaged if the approved procedure is not observed.

CAUTION

Applied when there is a danger of the equipment being damaged, if the approved procedure is not observed.

NOTE

The Note is used to indicate supplementary information other than Warning and Caution.

❍ **Read this manual carefully, and store it in a safe place.**

2 WARNINGS RELATED TO CHECK OPERATION

WARNING

1. When checking the operation of the machine with the cover removed

(1) The user's clothing could become caught in the spindle or other components, thus presenting a danger of injury. When checking the operation, stand away from the machine to ensure that your clothing does not become tangled in the spindle or other components.

(2) When checking the operation, perform idle operation without workpiece. When a workpiece is mounted in the machine, a malfunction could cause the workpiece to be dropped or destroy the tool tip, possibly scattering fragments throughout the area. This presents a serious danger of injury. Therefore, stand in a safe location when checking the operation.

2. When checking the machine operation with the power magnetics cabinet door opened

(1) The power magnetics cabinet has a high–voltage section (carrying a ⚠ mark). Never touch the high–voltage section. The high–voltage section presents a severe risk of electric shock. Before starting any check of the operation, confirm that the cover is mounted on the high–voltage section. When the high–voltage section itself must be checked, note that touching a terminal presents a severe danger of electric shock.

(2) Within the power magnetics cabinet, internal units present potentially injurious corners and projections. Be careful when working inside the power magnetics cabinet.

3. Never attempt to machine a workpiece without first checking the operation of the machine. Before starting a production run, ensure that the machine is operating correctly by performing a trial run using, for example, the single block, feedrate override, or machine lock function or by operating the machine with neither a tool nor workpiece mounted. Failure to confirm the correct operation of the machine may result in the machine behaving unexpectedly, possibly causing damage to the workpiece and/or machine itself, or injury to the user.

4. Before operating the machine, thoroughly check the entered data.
Operating the machine with incorrectly specified data may result in the machine behaving unexpectedly, possibly causing damage to the workpiece and/or machine itself, or injury to the user.

WARNING

5. Ensure that the specified feedrate is appropriate for the intended operation. Generally, for each machine, there is a maximum allowable feedrate. The appropriate feedrate varies with the intended operation. Refer to the manual provided with the machine to determine the maximum allowable feedrate. If a machine is run at other than the correct speed, it may behave unexpectedly, possibly causing damage to the workpiece and/or machine itself, or injury to the user.

6. When using a tool compensation function, thoroughly check the direction and amount of compensation.
Operating the machine with incorrectly specified data may result in the machine behaving unexpectedly, possibly causing damage to the workpiece and/or machine itself, or injury to the user.

3 WARNINGS RELATED TO REPLACEMENT

WARNING

1. Always turn off the power to the CNC and the main power to the power magnetics cabinet. If only the power to the CNC is turned off, power may continue to be supplied to the serve section. In such a case, replacing a unit may damage the unit, while also presenting a danger of electric shock.
2. When a heavy unit is to be replaced, the task must be undertaken by two persons or more. If the replacement is attempted by only one person, the replacement unit could slip and fall, possibly causing injury.
3. After the power is turned off, the servo amplifier and spindle amplifier may retain voltages for a while, such that there is a danger of electric shock even while the amplifier is turned off. Allow at least twenty minutes after turning off the power for these residual voltages to dissipate.
4. When replacing a unit, ensure that the new unit has the same parameter and other settings as the old unit. (For details, refer to the manual provided with the machine.) Otherwise, unpredictable machine movement could damage the workpiece or the machine itself, and present a danger of injury.

4 WARNINGS RELATED TO PARAMETERS

WARNING

1. When machining a workpiece for the first time after modifying a parameter, close the machine cover. Never use the automatic operation function immediately after such a modification. Instead, confirm normal machine operation by using functions such as the single block function, feedrate override function, and machine lock function, or by operating the machine without mounting a tool and workpiece. If the machine is used before confirming that it operates normally, the machine may move unpredictably, possibly damaging the machine or workpiece, and presenting a risk of injury.
2. The CNC and PMC parameters are set to their optimal values, so that those parameters usually need not be modified. When a parameter must be modified for some reason, ensure that you fully understand the function of that parameter before attempting to modify it. If a parameter is set incorrectly, the machine may move unpredictably, possibly damaging the machine or workpiece, and presenting a risk of injury.

5 WARNINGS AND NOTES RELATED TO DAILY MAINTENANCE

WARNING

1. Memory backup battery replacement

When replacing the memory backup batteries, keep the power to the machine (CNC) turned on, and apply an emergency stop to the machine. Because this work is performed with the power on and the cabinet open, only those personnel who have received approved safety and maintenance training may perform this work.
When replacing the batteries, be careful not to touch the high–voltage circuits (marked ⚠ and fitted with an insulating cover).
Touching the uncovered high–voltage circuits presents an extremely dangerous electric shock hazard.

NOTE

The CNC uses batteries to preserve the contents of its memory, because it must retain data such as programs, offsets, and parameters even while external power is not applied.
If the battery voltage drops, a low battery voltage alarm is displayed on the machine operator's panel or CRT screen.
When a low battery voltage alarm is displayed, replace the batteries within a week. Otherwise, the contents of the CNC's memory will be lost.
To replace the battery, see the procedure described in Section 2.10 of this manual.

WARNING

2. Absolute pulse coder battery replacement

When replacing the memory backup batteries, keep the power to the machine (CNC) turned on, and apply an emergency stop to the machine. Because this work is performed with the power on and the cabinet open, only those personnel who have received approved safety and maintenance training may perform this work.
When replacing the batteries, be careful not to touch the high–voltage circuits (marked ⚠ and fitted with an insulating cover).
Touching the uncovered high–voltage circuits presents an extremely dangerous electric shock hazard.

NOTE

The absolute pulse coder uses batteries to preserve its absolute position.
If the battery voltage drops, a low battery voltage alarm is displayed on the machine operator's panel or CRT screen.
When a low battery voltage alarm is displayed, replace the batteries within a week. Otherwise, the absolute position data held by the pulse coder will be lost.
To replace the battery, see the procedure described in Section 2.10 of this manual.

WARNING

3. Fuse replacement

Before replacing a blown fuse, however, it is necessary to locate and remove the cause of the blown fuse.
For this reason, only those personnel who have received approved safety and maintenance training may perform this work.
When replacing a fuse with the cabinet open, be careful not to touch the high–voltage circuits (marked ⚠ and fitted with an insulating cover).
Touching an uncovered high–voltage circuit presents an extremely dangerous electric shock hazard.

PREFACE

Description of this manual

1. Display and operation

This chapter covers those items, displayed on the screen, that are related to maintenance. A list of all supported operations is also provided at the end of this chapter.

2. LCD–mounted type *i* series hardware

3. LCD–mounted type *i*s series hardware

4. Stand–alone type *i* series hardware

5. Matters common to both LCD–mounted type and Stand–alone type *i* series hardware

Chapters 2 to 5 describes the configuration of the hardware, lists the hardware units, and explains how to replace printed–circuit boards.

6. Data input/output

This chapter describes the input/output of data, including programs, parameters, and tool compensation data, aswell as the input/output procedures for conversational data.

7. Interface between the CNC and PMC

This chapter describes the PMC specifications, the system configuration, and the signals used by the PMC.

8. Embedded ethernet

This chapter describes the embedded ethernet.

9. Digital servo

This chapter describes the servo tuning screen and how to adjust the reference position return position.

10. AC spindles

These chapters describe the spindle amplifier checkpoints, as well as the spindle tuning screen.

11. Trouble shooting

This chapter describes the procedures to be followed in the event of certain problems occurring, for example, if the power cannot be turned on or if manual operation cannot be performed. Countermeasures to be applied in the event of alarms being output are also described.

Appendix

A. Alarm list
B. List of maintenance parts
C. Boot system
D. Memory card slot
E. LED display and maintenance of stand–alone type unit
F. Maintenance of open CNC (boot–up and IPL)
G. FSSB start–up procedure/materials
H. Notation of MDI keys

This manual does not provide a parameter list. If necessary, refer to the separate PARAMETER MANUAL.

This manual can be used with the following models. The abbreviated names may be used.

Applicable models

Model name	Abbreviation	
FANUC Series 16*i*–TB	16*i*–TB	T series or T series (2–path control) *1 T series (3–path control) *2
FANUC Series 160*i*–TB	160*i*–TB	
FANUC Series 160*is*–TB	160*is*–TB	
FANUC Series 16*i*–MB	16*i*–MB	M series or M series (2–path control) *1
FANUC Series 160*i*–MB	160*i*–MB	
FANUC Series 160*is*–MB	160*is*–MB	
FANUC Series 18*i*–TB	18*i*–TB	T series or T series (2–path control) *1
FANUC Series 180*i*–TB	180*i*–TB	
FANUC Series 180*is*–TB	180*is*–TB	
FANUC Series 18*i*–MB5	18*i*–MB5	M series
FANUC Series 180*i*–MB5	180*i*–MB5	
FANUC Series 180*is*–MB5	180*is*–MB5	
FANUC Series 18*i*–MB	18*i*–MB	M series
FANUC Series 180*i*–MB	180*i*–MB	
FANUC Series 180*is*–MB	180*is*–MB	
FANUC Series 21*i*–TB	21*i*–TB	T series
FANUC Series 210*i*–TB	210*i*–TB	
FANUC Series 210*is*–TB	210*is*–TB	
FANUC Series 21*i*–MB	21*i*–MB	M series
FANUC Series 210*i*–MB	210*i*–MB	
FANUC Series 210*is*–MB	210*is*–MB	

*1) With two–path control function

*2) With three–path control function (three–path with 2 CPUs)

NOTE
Some function described in this manual may not be applied to some products.
For details, refer to the DESCRIPTIONS manual (B–63522EN)

Related manuals of Series 16*i*/18*i*/21*i*/160*i*/180*i*/210*i*/160*is*/180*is*/210*is*–MODEL B

The following table lists the manuals related to Series 16*i*, Series 18*i*, Series 21*i*, Series 160*i*, Series 180*i*, Series 210*i*, Series 160*is*, Series 180*is*, Series 210*is*–MODEL B. This manual is indicated by an asterisk(*).

Related manuals of Series 16*i*/18*i*/21*i*/160*i*/180*i*/210*i*/160*is*/180*is*/210*is* MODEL B

Manual name	Specification number	
DESCRIPTIONS	B–63522EN	*
CONNECTION MANUAL (HARDWARE)	B–63523EN	
CONNECTION MANUAL (FUNCTION)	B–63523EN–1	
Series 16*i*/18*i*/160*i*/180*i*/160*is*/180*is*–TB OPERATOR'S MANUAL	B–63524EN	
Series 16*i*/160*i*/160*is*–MB, Series 18*i*/180*i*/180*is*–MB5, Series 18*i*/180*i*/180*is*–MB OPERATOR'S MANUAL	B–63534EN	
Series 21*i*/210*i*/210*is*–TB OPERATOR'S MANUAL	B–63604EN	
Series 21*i*/210*i*/210*is*–MB OPERATOR'S MANUAL	B–63614EN	
MAINTENANCE MANUAL	B–63525EN	
Series 16*i*/18*i*/160*i*/180*i*/160*is*/180*is*–MODEL B PARAMETER MANUAL	B–63530EN	
Series 21*i*/210*i*/210*is*–MODEL B PARAMETER MANUAL	B–63610EN	
PROGRAMMING MANUAL		
Macro Compiler/Macro Executor PROGRAMMING MANUAL	B–61803E–1	
C Language Executor PROGRAMMING MANUAL	B–62443EN–3	
FAPT MACRO COMPILER (For Personal Computer) PROGRAMMING MANUAL	B–66102E	
CAP (T series)		
FANUC Super CAP*i* T OPERATOR'S MANUAL	B–63284EN	
FANUC Symbol CAP*i* T OPERATOR'S MANUAL	B–63304EN	
MANUAL GUIDE For Lathe PROGRAMMING MANUAL	B–63343EN	
MANUAL GUIDE For Lathe OPERATOR'S MANUAL	B–63344EN	
CAP (M series)		
FANUC Super CAP*i* M OPERATOR'S MANUAL	B–63294EN	
MANUAL GUIDE For Milling PROGRAMMING MANUAL	B–63423EN	
MANUAL GUIDE For Milling OPERATOR'S MANUAL	B–63424EN	

Manual name	Specification number	
PMC		
PMC Ladder Language PROGRAMMING MANUAL	B–61863E	
PMC C Language PROGRAMMING MANUAL	B–61863E–1	
Network		
I/O Link–II OPERATOR'S MANUAL	B–62924EN	
Profibus–DP Board OPERATOR'S MANUAL	B–62924EN	
Ethernet Board/DATA SERVER Board OPERATOR'S MANUAL	B–63354EN	
FAST Ethernet Board/FAST DATA SERVER OPERATOR'S MANUAL	B–63644EN	
DeviceNet Board OPERATOR'S MANUAL	B–63404EN	
PC function		
Screen Display Function OPERATOR'S MANUAL	B–63164EN	

Related manuals of SERVO MOTOR αi series

The following table lists the manuals related to SERVO MOTOR αi series

Manual name	Specification number
FANUC AC SERVO MOTOR αi series DESCRIPTIONS	B–65262EN
FANUC AC SERVO MOTOR αi series PARAMETER MANUAL	B–65270EN
FANUC AC SPINDLE MOTOR αi series DESCRIPTIONS	B–65272EN
FANUC AC SPINDLE MOTOR αi series PARAMETER MANUAL	B–65280EN
FANUC SERVO AMPLIFIER αi series DESCRIPTIONS	B–65282EN
FANUC SERVO MOTOR αi series MAINTENANCE MANUAL	B–65285EN

Related manuals of SERVO MOTOR α series

The following table lists the manuals related to SERVO MOTOR α series

Manual name	Specification number
FANUC AC SERVO MOTOR α series DESCRIPTIONS	B–65142
FANUC AC SERVO MOTOR α series PARAMETER MANUAL	B–65150
FANUC AC SPINDLE MOTOR α series DESCRIPTIONS	B–65152
FANUC AC SPINDLE MOTOR α series PARAMETER MANUAL	B–65160
FANUC SERVO AMPLIFIER α series DESCRIPTIONS	B–65162
FANUC SERVO MOTOR α series MAINTENANCE MANUAL	B–65165

Either of the following servo motors and the corresponding spindle can be connected to the CNC covered in this manual.

- FANUC SERVO MOTOR αi series

- FANUC SERVO MOTOR α series

This manual mainly assumes that the FANUC SERVO MOTOR α*i* series of servo motor is used. For servo motor and spindle information, refer to the manuals for the servo motor and spindle that are actually connected.

Table of Contents

SAFETY PRECAUTIONS s–1

PREFACE p–1

1. DISPLAY AND OPERATION 1

1.1 FUNCTION KEYS AND SOFT KEYS 2
1.1.1 Soft Keys 2
1.2 SCREEN DISPLAYED IMMEDIATELY AFTER POWER IS TURNED ON 23
1.2.1 Slot Status Display 23
1.2.2 Setting Module Screen 24
1.2.3 Configuration Display of Software 24
1.3 SYSTEM CONFIGURATION SCREEN 25
1.3.1 Display Method 25
1.3.2 Configuration of PCBs 25
1.3.3 Software Configuration Screen 27
1.3.4 Module Configuration Screen 27
1.3.5 ID Information Screen (αi Servo Information Screen/αi Spindle Information Screen) 28
1.4 ALARM HISTORY SCREEN 29
1.4.1 Alarm History Screen 29
1.4.1.1 General 29
1.4.1.2 Screen Display 29
1.4.1.3 Clearing Alarm History 29
1.4.1.4 Alarm Display 29
1.4.2 System Alarm History 30
1.4.2.1 General 30
1.4.2.2 System alarm history screen (history list screen) 30
1.4.2.3 System alarm history screen (detail screen) 32
1.4.2.4 Parameter 35
1.5 EXTERNAL OPERATOR MESSAGES RECORD 36
1.5.1 Screen Display 36
1.5.2 Deletion of External Operator Messages Record 36
1.5.3 Parameter 37
1.5.4 Notes 37
1.6 OPERATION HISTORY 38
1.6.1 Parameter Setting 38
1.6.2 Screen Display 43
1.6.3 Setting The Input Signal or Output Signal to Be Recorded in The Operation History 47
1.6.4 Inputting and Outputting the Operation History Data 56
1.6.5 Notes 62
1.7 HELP FUNCTION 63
1.7.1 General 63
1.7.2 Display Method 63
1.8 DISPLAYING DIAGNOSTIC PAGE 66
1.8.1 Displaying Diagnostic Page 66
1.8.2 Contents Displayed 66
1.9 CNC STATE DISPLAY 98

1.10 WAVEFORM DIAGNOSTIC FUNCTION 100
1.10.1 Setting Parameters 100
1.10.2 Waveform Diagnostic Parameter Screen 101
1.10.3 Graphic of Wave Diagnosis data 104
1.10.4 Data Sampling for Storage Type Waveform Diagnosis 106
1.10.5 Outputting Waveform Diagnosis Data (Storage Type) 108
1.10.6 Notes 111
1.11 OPERATING MONITOR 112
1.11.1 Display Method 112
1.11.2 Parameters 113
1.12 LIST OF OPERATIONS 114
1.13 WARNING SCREEN DISPLAYED WHEN AN OPTION IS CHANGED 124
1.14 WARNING SCREEN DISPLAYED WHEN SYSTEM SOFTWARE IS REPLACED (SYSTEM LABEL CHECK ERROR) 126
1.15 MAINTENANCE INFORMATION SCREEN 127
1.15.1 Screen Display and Operation 127
1.15.2 Maintenance Information Input/Output 130
1.16 COLOR SETTING SCREEN 131
1.16.1 Screen Display 131
1.16.2 Color Setting 131
1.16.3 Parameters 133
1.16.4 Notes 134
1.17 CONTRAST ADJUSTMENT 135
1.18 POWER MOTION MANAGER 138
1.18.1 Parameter 138
1.18.2 Screen Display 139
1.18.3 Parameter Input/Output 145
1.18.4 Notes 147
1.19 PERIODIC MAINTENANCE SCREENS 148
1.19.1 Overview 148
1.19.2 Screen Display and Setting 148
1.19.3 Status Screen Display and Setting 149
1.19.4 Setting Screen Display and Setting 154
1.19.5 Registered Data Input/Output 156
1.19.6 FANUC Two–Byte Character Code Table 158

2. LCD–MOUNTED TYPE *i* SERIES HARDWARE 164

2.1 STRUCTURE 165
2.2 OVERVIEW OF HARDWARE 166
2.2.1 Series 16*i*/160*is* 166
2.2.2 Series 18*i*/180*is* 168
2.2.3 Series 21*i*/210*is* 169
2.3 TOTAL CONNECTION DIAGRAMS 170
2.4 CONFIGURATION OF PRINTED CIRCUIT BOARD CONNECTORS AND CARDS 175
2.4.1 FS16*i*/18*i*/21*i* Motherboard 175
2.4.2 Inverter PCBs and Connector Units 184
2.4.3 C Board, Serial Communication Board, Symbol CAP*i* T Board, and PMC–RE Board 187

2.4.4 Sub–CPU Board 193
2.4.5 RISC Board 197
2.4.6 Data Server Board 200
2.4.7 Loader Control Board 204
2.4.8 HSSB Interface Board 208
2.4.9 I/O Link–II Board 211
2.4.10 PROFIBUS Board 213
2.4.11 Ethernet Board 215
2.4.12 DeviceNet Interface Board 219
2.5 LIST OF UNITS AND PRINTED CIRCUIT BOARDS 221
2.5.1 Basic Unit 221
2.5.2 Display Unit 221
2.5.3 MDI Unit 222
2.5.4 Printed Circuit Boards 223
2.5.5 I/O 227
2.5.6 Other Units 228
2.6 REPLACING THE MOTHERBOARD 229
2.7 REPLACING FUSE ON CONTROL UNIT 231
2.8 REPLACING BATTERY 232
2.9 REPLACING FAN MOTORS 236
2.10 REPLACING LCD BACKLIGHT 239
2.11 HEAT GENERATED IN EACH UNIT 243

3. LCD–MOUNTED TYPE *i*s SERIES HARDWARE 245

3.1 HARDWARE CONFIGURATION 246
3.2 HARDWARE OVERVIEW 246
3.3 TOTAL CONNECTION DIAGRAMS 246
3.4 FS160*i*s/180*i*s/210*i*s MOTHERBOARD 247
3.5 CE CARD 258
3.6 INSTALLING AND REMOVING OPTIONAL BOARDS 259
3.6.1 Installing and Removing the Mother Board 259
3.6.2 Installing and Removing the CE Card 261
3.7 LIST OF UNITS AND PRINTED CIRCUIT BOARDS 264
3.8 REPLACING THE FUSE ON THE UNITS 265
3.9 REPLACING THE BATTERY 266
3.10 REPLACING THE FAN MOTOR 266
3.11 REPLACING THE LCD BACK–LIGHT 267
3.12 REPLACING THE TOUCH PANEL PROTECTION SHEET 267
3.13 BACKUP UNIT 268

4. STAND–ALONE TYPE *i* SERIES HARDWARE 269

4.1 HARDWARE CONFIGURATION 270
4.2 HARDWARE OVERVIEW 271
4.2.1 Series 16*i*/160*i*/160*i*s 271
4.2.2 Series 18*i*/180*i*/180*i*s 273
4.2.3 Series 21*i*/210*i*/210*i*s 274
4.3 TOTAL CONNECTION DIAGRAMS 275

4.4 CONNECTOR AND CARD CONFIGURATIONS OF PRINTED CIRCUIT BOARDS 280
4.4.1 Main CPU Board of Series 16*i*/18*i*/21*i*/160*i*/180*i*/210*i*/160*is*/180*is*/210*is* 280
4.4.2 Sub–CPU Board 289
4.4.3 RISC Board, Data Server Board, RISC + Data Server Board 293
4.4.4 Loader Control Board 299
4.4.5 C Board, Serial Communication Board 302
4.4.6 HSSB Interface Board 303
4.4.7 Symbol CAP*i* T Board 307
4.4.8 I/O Link–II Board 308
4.4.9 Ethernet Board 309
4.4.10 DeviceNet Board 311
4.4.11 PROFIBUS Master Board 313
4.4.12 PROFIBUS Slave Board 314
4.4.13 FL–net Board 315
4.4.14 Main CPU Board of CNC Display Unit with PC Functions and PANEL *i* 316
4.4.15 Mother Board of CNC Display Unit for *i*s Series 319
4.5 UNITS AND PRINTED CIRCUIT BOARDS 324
4.5.1 Basic Units 324
4.5.2 Printed Circuit Boards of Control Unit 324
4.5.3 LCD/MDI Unit 329
4.5.4 Other Units 330
4.5.5 CNC Display Unit with PC Functions and PANEL *i* 331
4.5.6 CNC Display Unit for *i*s series CNC 334
4.6 MOUNTING AND REMOVING AN OPTION BOARD 335
4.6.1 Mounting and Removing the Main CPU Board and a Full–Size Option Board 335
4.6.1.1 Removing the board 335
4.6.1.2 Mounting the board 336
4.6.2 Mounting and Removing a Mini–Slot Option Board (Except DeviceNet Board) 337
4.6.2.1 Removing the board 337
4.6.2.2 Mounting the board 337
4.6.3 Mounting and Removing the DeviceNet Board 338
4.6.3.1 Removing the board 338
4.6.3.2 Mounting the board 338
4.7 MOUNTING AND REMOVING THE BACK PANEL 340
4.7.1 Removing the Panel 340
4.7.2 Mounting the Back Panel 340
4.8 REPLACING THE FUSE OF THE CONTROL UNIT 342
4.9 REPLACING THE BATTERY 343
4.10 REPLACING A FAN UNIT 347
4.11 REPLACING THE FUSE OF THE LCD UNIT 348
4.12 REPLACING THE LCD BACKLIGHT 349
4.13 HEAT GENERATION OF THE UNITS 351

5. MATTERS COMMON TO BOTH LCD–MOUNTED TYPE AND STAND–ALONE TYPE *i* SERIES (HARDWARE) 353

5.1 MOUNTING AND DEMOUNTING CARD PCBS 354
5.1.1 Demounting a Card PCB 355

5.1.2 Mounting a Card PCB 356
5.2 MOUNTING AND DEMOUNTING DIMM MODULES 357
5.2.1 Demounting a DIMM Module 358
5.2.2 Mounting a DIMM Module 358
5.3 MAINTENANCE OF HEAT EXCHANGER OF HEAT PIPE TYPE 359
5.4 LIQUID CRYSTAL DISPLAY (LCD) 363
5.5 DISTRIBUTED I/O SETTING 368
5.6 REPLACING FUSES ON VARIOUS UNITS 371
5.7 ENVIRONMENTAL CONDITIONS OUTSIDE CABINET 376
5.8 COUNTERMEASURES AGAINST NOISE 377
5.8.1 Separation of Signal Lines 377
5.8.2 Grounding 379
5.8.3 Signal Ground (SG) Connection of Control Unit 380
5.8.4 Noise Suppressor 382
5.8.5 Cable Clamping and Shielding 383
5.9 NOTES ON USING THE MDI UNIT 386
5.10 REPLACING THE MAINTENANCE PARTS OF CNC DISPLAY UNIT FOR PC FUNCTIONS AND PANEL *i* 387
5.10.1 Replacing the Battery 387
5.10.2 Replacing the Fuse 389
5.10.3 Replacing the Fan 390
5.10.4 Replacing the LCD Back–Light 393
5.10.5 Replacing the Touch Panel Protection Sheet 394
5.11 REPLACING THE MAINTENANCE PARTS OF CNC DISPLAY UNIT FOR *is* SERIES CNC 395
5.11.1 Replacing Procedure of Mother Board 395
5.11.2 Replacing the Fuse 396
5.11.3 Replacing the Battery 397
5.11.4 Replacing the Fan Motor 397
5.11.5 Replacing the LCD Back–Light 398
5.11.6 Replacing the Touch Panel Protection Sheet 398
5.11.7 Backup Unit 398

6. INPUT AND OUTPUT OF DATA 399

6.1 SETTING PARAMETERS FOR INPUT/OUTPUT 400
6.2 INPUTTING/OUTPUTTING DATA 402
6.2.1 Confirming the Parameters Required for Data Output 402
6.2.2 Outputting CNC Parameters 403
6.2.3 Outputting PMC Parameters 404
6.2.4 Outputting Pitch Error Compensation Amount 404
6.2.5 Outputting Custom Macro Variable Values 405
6.2.6 Outputting Tool Compensation Amount 405
6.2.7 Outputting Part Program 405
6.2.8 Inputting CNC Parameters 406
6.2.9 Inputting PMC Parameters 407
6.2.10 Inputting Pitch Error Compensation Amount 408
6.2.11 Inputting Custom Macro Variable Values 408

6.2.12 Inputting Tool Compensation Amount 409
6.2.13 Inputting Part Programs 409
6.3 INPUT/OUTPUT Super CAP*i* DATA 411
6.3.1 Input/Output of Conversational Data in a Lump (Super CAP*i* M) 411
6.3.2 Input and Output of Each File (Super CAP*i* M) 413
6.3.3 Input and Output of Each File (Super CAP*i* T) 413
6.4 INPUTTING/OUTPUTTING Symbol CAP*i* T 417
6.5 DUMP/RESTORE OF Symbol CAP*i* T DATA 419
6.5.1 Kind of Data in Sub Memory 419
6.5.2 Operation 419
6.6 CLEARING Symbol CAP*i* T DATA 420
6.6.1 Deleting File Name and Files 420
6.6.2 Clearing Symbol CAP*i* T Memory 421
6.7 DATA INPUT/OUTPUT ON THE ALL IO SCREEN 422
6.7.1 Setting Input/Output–Related Parameters 423
6.7.2 Inputting and Outputting Programs 425
6.7.3 Inputting and Outputting Parameters 429
6.7.4 Inputting and Outputting Offset Data 430
6.7.5 Outputting Custom Macro Common Variables 431
6.7.6 Inputting and Outputting Floppy Files 432
6.8 DATA INPUT/OUTPUT USING A MEMORY CARD 437

7. INTERFACE BETWEEN CNC AND PMC 447

7.1 GENERAL OF INTERFACE 448
7.2 SPECIFICATION OF PMC 449
7.2.1 Specification 449
7.2.2 Address 450
7.2.3 System Reserve Area of Internal Relay 451
7.2.4 Execution Period of PMC 454
7.3 PMC SCREEN 457
7.3.1 PMC Menu Selection Procedure Using Soft Keys 457
7.3.2 PMCLAD Screen (PMC–SA1) 459
7.3.3 Ladder Diagram Display/Editing (PMC–SB7) 463
7.3.3.1 Ladder diagram display screen 463
7.3.3.2 Program list display screen 466
7.3.3.3 Selection monitor function (PMC–SB7) 468
7.3.3.4 Ladder diagram editing screen 472
7.3.3.5 Net editing screen 476
7.3.3.6 Signal trace function (PMC–SB7) 478
7.3.4 PMCDGN Screen 485
7.3.5 PMCPRM Screen 489
7.3.6 Setting Screen 492
7.3.7 Online Setting 494
7.3.7.1 Online setting screen 494
7.3.7.2 Setting of online connection 494
7.3.7.3 Communication Status 495
7.4 LIST OF SIGNALS BY EACH MODE 497

7.5 LIST OF INPUT/OUTPUT SIGNALS 499
7.6 LIST OF ADDRESSES 519

8. EMBEDDED ETHERNET FUNCTION 599

8.1 EMBEDDED ETHERNET AND PCMCIA ETHERNET 600
8.2 LIST OF FUNCTIONS 601
8.2.1 FACTOLINK Function 601
8.2.2 FOCAS1/Ethernet Function 601
8.2.3 DNC1/Ethernet Function 603
8.2.4 FTP File Transfer Function 605
8.2.5 Functional Differences between the Embedded Ethernet Function and the Ethernet Function Based on the Option Board 605
8.3 SETTING THE EMBEDDED ETHERNET FUNCTION 607
8.3.1 Parameter Setting of the FACTOLINK Function 607
8.3.1.1 Notes on using the FACTOLINK function for the first time 607
8.3.1.2 FACTOLINK parameter setting screen 608
8.3.1.3 Parameters 611
8.3.1.4 Using the FACTOLINK function on a small network 613
8.3.1.5 Configuring a large network 614
8.3.2 Parameter Setting of the FOCAS1/Ethernet Function 614
8.3.2.1 Notes on using the FOCAS1/Ethernet function for the first time 614
8.3.2.2 FOCAS1/Ethernet parameter setting screen 615
8.3.2.3 Using the FOCAS1/Ethernet function on a small network 619
8.3.2.4 Using the DNC1/Ethernet function on a small network 620
8.3.2.5 Configuring a large network 621
8.3.3 Parameter Setting of the FTP File Transfer Function 621
8.3.3.1 Notes on using the FTP file transfer function for the first time 621
8.3.3.2 FTP file transfer parameter setting screen 622
8.3.3.3 Parameters 625
8.3.3.4 Using the FTP file transfer function on a small network 626
8.3.3.5 Configuring a large network 627
8.3.4 Communication Parameter Input Method 627
8.4 SWITCHING BETWEEN THE EMBEDDED ETHERNET DEVICES 635
8.5 EMBEDDED ETHERNET OPERATIONS 637
8.5.1 FACTOLINK Function 637
8.5.2 FTP File Transfer Function 638
8.5.2.1 Host file list display 638
8.5.2.2 Host file search 641
8.5.2.3 Host file deletion 641
8.5.2.4 NC program input 642
8.5.2.5 NC program output 643
8.5.2.6 Input/output of various types of data 645
8.5.2.7 Checking and changing of the connection host 651
8.6 EMBEDDED ETHERNET ERROR MESSAGE SCREEN 653
8.7 EMBEDDED ETHERNET MAINTENANCE SCREEN 655
8.8 TROUBLESHOOTING 660
8.8.1 Check Items Related to Connection with the Hub 660

8.8.2 Check Items Related to Connection with a Backbone 660
8.8.3 Checking the Setting of Each Parameter 661
8.8.4 Checking Communication 662
8.9 ERROR MESSAGES 665
8.9.1 EMB_ETH MASTER CTRL LOG Screen 665
8.9.2 EMB_ETH FOCAS1/ETHER LOG Screen 666
8.9.3 EMB_ETH FTP TRANSFER LOG Screen 666
8.9.4 EMB_ETH FACTOLINK LOG Screen 666
8.10 GLOSSARY FOR ETHERNET 667

9. DIGITAL SERVO 669

9.1 INITIAL SETTING SERVO PARAMETERS 670
9.2 SERVO TUNING SCREEN 684
9.2.1 Parameter Setting 684
9.2.2 Displaying Servo Tuning Screen 684
9.3 ADJUSTING REFERENCE POSITION (DOG METHOD) 687
9.3.1 General 687
9.4 DOGLESS REFERENCE POSITION SETTING 690
9.4.1 General 690
9.4.2 Operation 690
9.4.3 Associated Parameters 691
9.5 αi SERVO WARNING INTERFACE 692
9.6 αi SERVO INFORMATION SCREEN 694

10. AC SPINDLE (SERIAL INTERFACE) 698

10.1 AC SPINDLE (SERIAL INTERFACE) 699
10.1.1 Outline of Spindle Control 699
10.1.1.1 Method A of gear change for machining center 701
10.1.1.2 Method B of gear change for machining center (PRM 3705#2=1) 701
10.1.1.3 For lathe 701
10.1.2 Spindle Setting and Tuning Screen 702
10.1.2.1 Display method 702
10.1.2.2 Spindle setting screen 702
10.1.2.3 Spindle tuning screen 703
10.1.2.4 Spindle monitor screen 705
10.1.2.5 Correspondence between operation mode and parameters on spindle tuning screen 707
10.1.3 Automatic Setting of Standard Parameters 710
10.1.4 Warning Interface for the αi Spindle 711
10.1.5 αi Spindle Information Screen 713
10.2 AC SPINDLE (ANALOG INTERFACE) 717
10.2.1 Outline of Spindle Control 717
10.2.1.1 Block diagram 718
10.2.1.2 Calculation of S analog voltage and related parameters 719
10.2.1.3 Tuning S analog voltage (D/A converter) 721

11. TROUBLESHOOTING 723

11.1 CORRECTIVE ACTION FOR FAILURES 725

11.1.1 Investigating the Conditions Under which Failure Occurred 725
11.2 NO MANUAL OPERATION NOR AUTOMATIC OPERATION CAN BE EXECUTED 727
11.3 JOG OPERATION CANNOT BE DONE 731
11.4 HANDLE OPERATION CANNOT BE DONE 735
11.5 AUTOMATIC OPERATION CANNOT BE DONE 740
11.6 CYCLE START LED SIGNAL HAS TURNED OFF 748
11.7 NOTHING IS DISPLAYED ON THE LCD WHEN THE POWER IS TURNED ON 750
11.8 THE DISPLAY ON THE LCD UNIT FLASHES 754
11.9 INPUT FROM AND OUTPUT TO I/O DEVICES CANNOT BE PERFORMED INPUT/ OUTPUT CANNOT BE PERFORMED PROPERLY 755
11.10 IN A CONNECTOR PANEL I/O UNIT, DATA IS INPUT TO AN UNEXPECTED ADDRESS . . 757
11.11 IN A CONNECTOR PANEL I/O UNIT, NO DATA IS OUTPUT TO AN EXPANSION UNIT . . . 758
11.12 ALARM 85 TO 87 (READER/PUNCHER INTERFACE ALARM) 759
11.13 ALARM 90 (REFERENCE POSITION RETURN IS ABNORMAL) 765
11.14 ALARM 300 (REQUEST FOR REFERENCE POSITION RETURN) 767
11.15 ALARM 401 (V READY OFF) 768
11.16 ALARM 404 (V READY ON) 772
11.17 ALARM 462 (SEND CNC DATA FAILED) ALARM 463 (SEND SLAVE DATA FAILED) 775
11.18 ALARM 417 (DIGITAL SERVO SYSTEM IS ABNORMAL) 778
11.19 ALARM 700 (OVERHEAT: CONTROL UNIT) 779
11.20 ALARM 701 (OVERHEAT: FAN MOTOR) 780
11.21 ALARM 704 (SPINDLE SPEED FLUCTUATION DETECTION ALARM) 782
11.22 ALARM 749 (SERIAL SPINDLE COMMUNICATION ERROR) 783
11.23 ALARM 750 (SPINDLE SERIAL LINK STARTUP FAILURE) 784
11.24 ALARM 5134 (FSSB: OPEN READY TIME OUT)
ALARM 5135 (FSSB: ERROR MODE)
ALARM 5137 (FSSB: CONFIGURATION ERROR)
ALARM 5197 (FSSB: OPEN TIME OUT)
ALARM 5198 (FSSB: ID DATA NOT READ) 787
11.25 ALARM 5136 (FSSB: NUMBER OF AMPS IS SMALL) 791
11.26 ALARM 900 (ROM PARITY) 794
11.27 ALARMS 910 AND 911 (SRAM PARITY) 796
11.28 ALARMS 912 TO 919 (DRAM PARITY) 799
11.29 ALARMS 920 AND 921 (SERVO ALARMS) 801
11.30 ALARM 926 (FSSB ALARM) 805
11.31 ALARM 930 (CPU INTERRUPT) 811
11.32 ALARM 935 (SRAM ECC ERROR) 813
11.33 ALARM 950 (PMC SYSTEM ALARM) 815
11.34 ALARM 951 (PMC WATCHDOG ALARM) 818
11.35 ALARM 972 (NMI ALARM ON AN OPTION BOARD) 819
11.36 ALARM 973 (NMI ALARM WITH AN UNKNOWN CAUSE) 820
11.37 ALARM 974 (F–BUS ERROR) 821
11.38 ALARM 975 (BUS ERROR) 824
11.39 ALARM 976 (LOCAL BUS ERROR) 825
11.40 SERVO ALARMS 826
11.41 SPC ALARMS 831
11.42 SPINDLE ALARMS 832

APPENDIX

A. ALARM LIST 835

A.1 LIST OF ALARM CODES (CNC) 836
A.2 LIST OF ALARMS (PMC) 875
A.3 ALARM LIST (SERIAL SPINDLE) 900
A.4 ERROR CODES (SERIAL SPINDLE) 912

B. LIST OF MAINTENANCE PARTS 914

C. BOOT SYSTEM 915

C.1 OVERVIEW 916
C.1.1 Starting the Boot System 916
C.1.2 System Files and User Files 917
C.1.3 Boot Slot Configuration Screen 917
C.2 SCREEN CONFIGURATION AND OPERATING PROCEDURE 918
C.2.1 System Data Loading Screen 919
C.2.2 System Data Check Screen 921
C.2.3 System Data Delete Screen 923
C.2.4 SYSTEM DATA SAVE Screen 924
C.2.5 SRAM DATA BACKUP Screen 926
C.2.6 MEMORY CARD FILE DELETE Screen 929
C.2.7 MEMORY CARD FORMAT Function 930
C.2.8 LOAD BASIC SYSTEM Function 931
C.3 ERROR MESSAGES AND REQUIRED ACTIONS 933

D. MEMRY CARD SLOT 936

D.1 OVERVIEW 937
D.2 MEMORY CARD TYPES (FUNCTIONS) 938
D.3 HARDWARE CONFIGURATION 939

E. LED DISPLAY AND MAINTENANCE OF STAND–ALONE TYPE UNIT 941

E.1 OVERVIEW 942
E.2 LAYOUT OF THE 7–SEGMENT LED AND SWITCHES 943
E.3 OPERATION 944
E.3.1 Operation Before Power–On 944
E.3.2 Function Number 944
E.3.3 Seven–Segment LED Display 945
E.3.3.1 NC status display 945
E.3.3.2 LED display during automatic operation 945
E.3.3.3 LED display when the push switch is pressed 945
E.3.3.4 LED display when a system alarm is issued 946
E.3.3.5 Display on the 7–segment LED at power–on 947
E.3.4 Operation of Each Function 948

F. MAINTENANCE OF OPEN CNC (BOOT–UP AND IPL) 950

F.1 OVERVIEW 951

F.2 CHANGING START SEQUENCES 952
F.3 EXPLANATION OF SCREENS 954
F.3.1 Boot Screen 954
F.3.1.1 System data manipulation 955
F.3.1.2 SRAM operation 956
F.3.1.3 File operation 957
F.3.2 IPL Screen 958
F.3.2.1 Functions on the IPL screen 959
F.4 OTHER SCREENS 961
F.4.1 CNC Alarm Screen 961
F.4.2 Status Screen (160*i*/180*i*/210*i*) 962
F.4.3 Option Setting Screen (160*i*/180*i*/210*i* Only) 964

G. FSSB START–UP PROCEDURE/MATERIALS 965

G.1 OVERVIEW 966
G.2 SLAVE 967
G.3 AUTOMATIC SETTING 968
G.3.1 [Sample Setting 1] General Configuration (Semi–Closed Loop) 970
G.3.2 [Sample Setting 2] General Configuration (Closed Loop) 971
G.3.3 [Sample Setting 3] When the C–Axis is a Cs Axis 973
G.3.4 [Sample Setting 4] Tandem Control Configuration 975
G.3.5 [Sample Setting 5] When the Simple Electronic Gear Box (EGB) Function is Used 977
G.4 MANUAL SETTING 2 979
G.5 MANUAL SETTING 1 986
G.6 ALARMS 987
G.7 ACTIONS FOR TROUBLE ENCOUNTERED AT START–UP TIME 992
G.8 EXAMPLES OF SETTINGS USING OTHER CONNECTIONS 994
G.8.1 Example 1: Learning Control 994
G.8.2 Example 2: When a 2–Axis Amplifier is Shared by Two Paths 995
G.9 FSSB DATA DISPLAY 998
G.9.1 Amplifier Setting Screen 998
G.9.2 Axis Setting Screen 999
G.9.3 Amplifier Maintenance Screen 1000

H. NOTATION OF MDI KEYS 1002

1 DISPLAY AND OPERATION

This chapter describes how to display various screens by the function keys. The screens used for maintenance are respectively displayed.

1.1 FUNCTION KEYS AND SOFT KEYS 2
1.2 SCREEN DISPLAYED IMMEDIATELY AFTER POWER IS TURNED ON 23
1.3 SYSTEM CONFIGURATION SCREEN 25
1.4 ALARM HISTORY SCREEN 29
1.5 EXTERNAL OPERATOR MESSAGES RECORD 36
1.6 OPERATION HISTORY 38
1.7 HELP FUNCTION 63
1.8 DISPLAYING DIAGNOSTIC PAGE 66
1.9 CNC STATE DISPLAY 98
1.10 WAVEFORM DIAGNOSTIC FUNCTION 100
1.11 OPERATING MONITOR 112
1.12 LIST OF OPERATIONS 114
1.13 WARNING SCREEN DISPLAYED WHEN AN OPTION IS CHANGED 124
1.14 WARNING SCREEN DISPLAYED WHEN SYSTEM SOFTWARE IS REPLACED (SYSTEM LABEL CHECK ERROR) 126
1.15 MAINTENANCE INFORMATION SCREEN 127
1.16 COLOR SETTING SCREEN 131
1.17 CONTRAST ADJUSTMENT 135
1.18 POWER MOTION MANAGER 138
1.19 PERIODIC MAINTENANCE SCREENS 148

1.1 FUNCTION KEYS AND SOFT KEYS

Operations and soft key display staturs for each function key are described below:

1.1.1 Soft Keys

To display a more detailed screen, press a function key followed by a soft key. Soft keys are also used for actual operations.
The following illustrates how soft key displays are changed by pressing each function key.

The symbols in the following figures mean as shown below :

	:	Indicates screens
	:	Indicates a screen that can be displayed by pressing a function key(*1)
[ ]	:	Indicates a soft key(*2)
( )	:	Indicates input from the MDI panel.
[ ]	:	Indicates a soft key displayed in green (or highlighted).
	:	Indicates the continuous menu key (rightmost soft key)(*3).

*1 Press function keys to switch between screens that are used frequently.

*2 Some soft keys are not displayed depending on the option configuration.

*3 In some cases, the continuous menu key is omitted when the 12 soft keys type is used.

POSITION SCREEN Soft key transition triggered by the function key [POS]

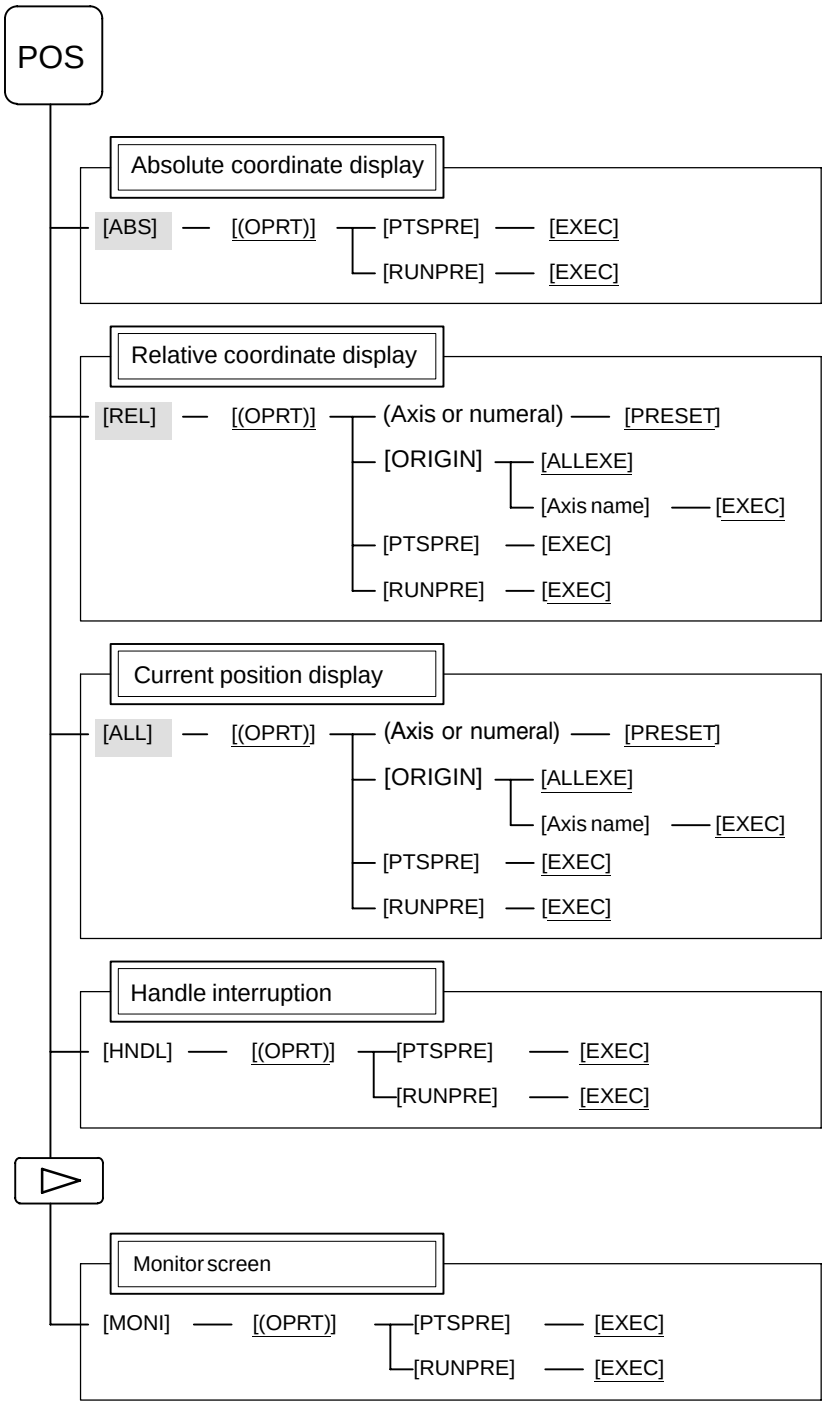

PROGRAM SCREEN

Soft key transition triggered by the function key PROG in the MEM mode

1/2

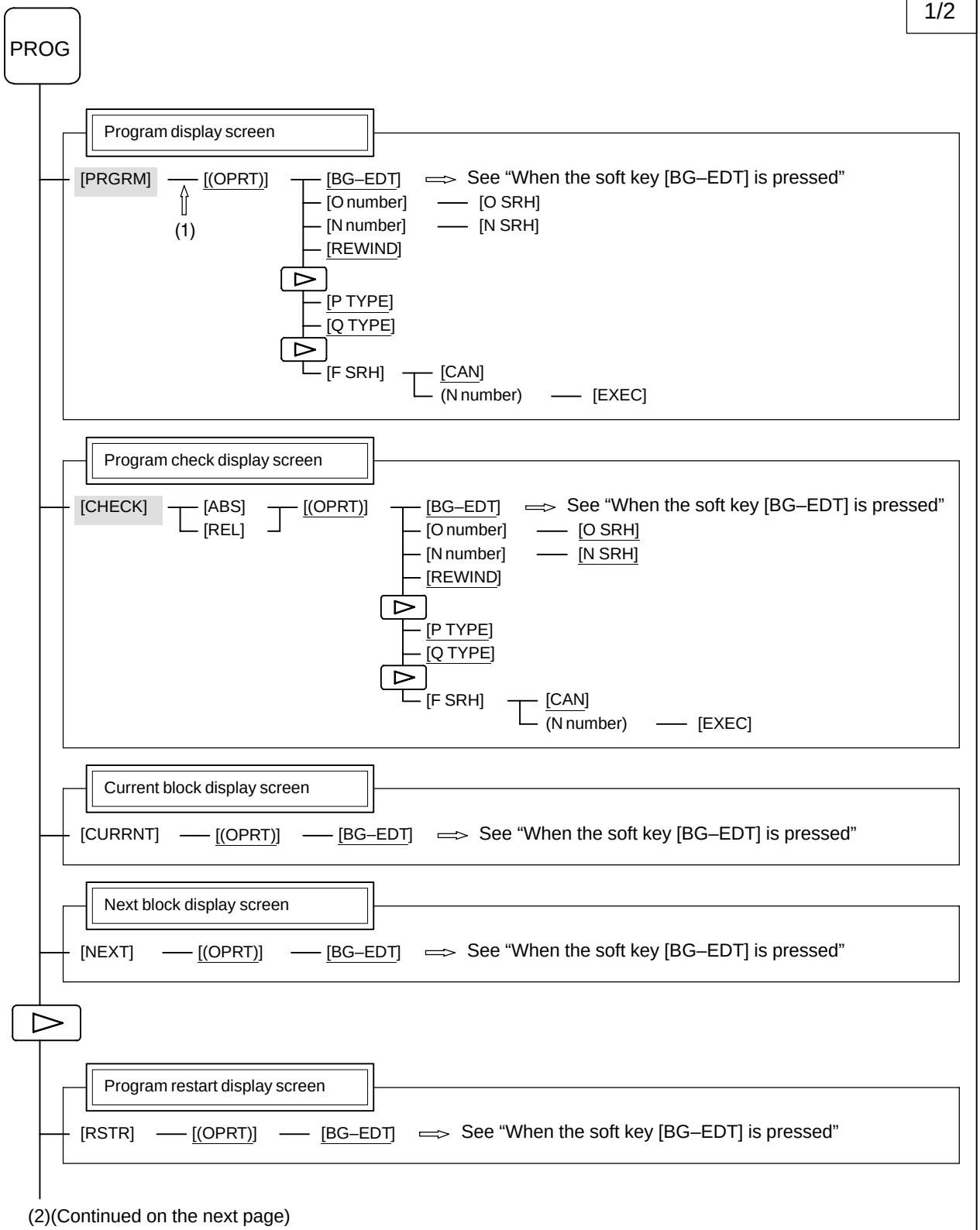

(2)(Continued on the next page)

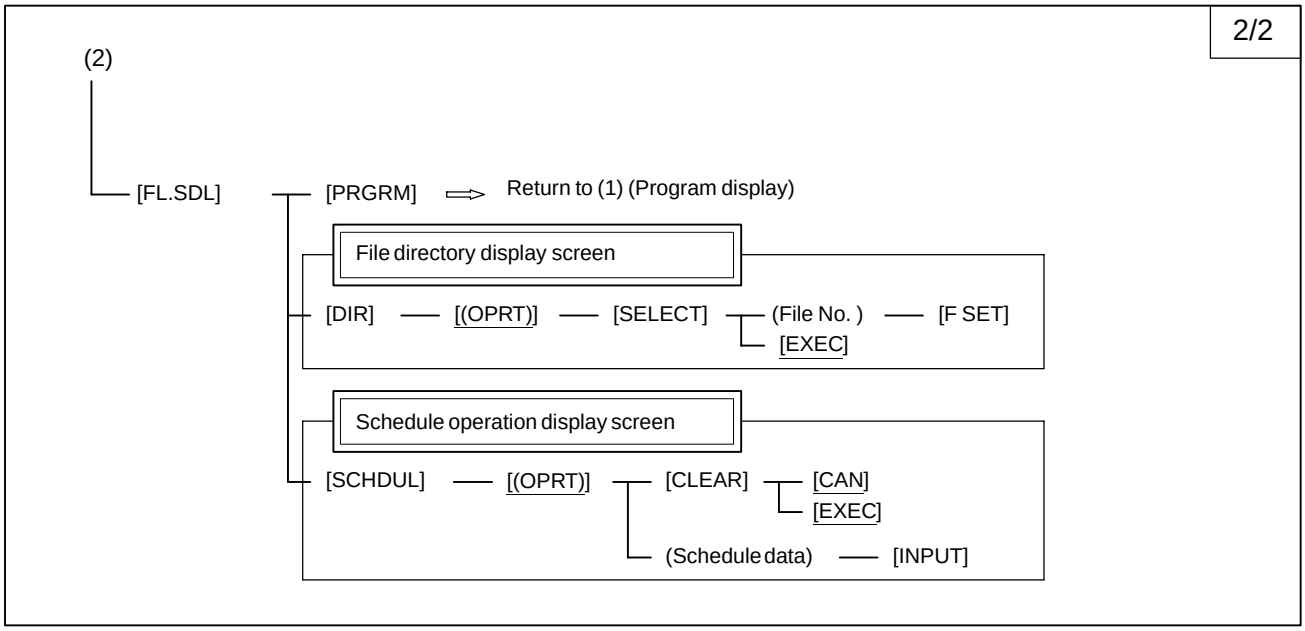
2/2
(2)
[FL.SDL]
[PRGRM]
Return to (1) (Program display)
File directory display screen
[DIR]
[(OPRT)]
[SELECT]
(File No.)
[F SET]
[EXEC]
Schedule operation display screen
[SCHDUL]
[(OPRT)]
[CLEAR]
[CAN]
[EXEC]
(Schedule data)
[INPUT]

PROGRAM SCREEN

Soft key transition triggered by the function key PROG in the EDIT mode

1/2

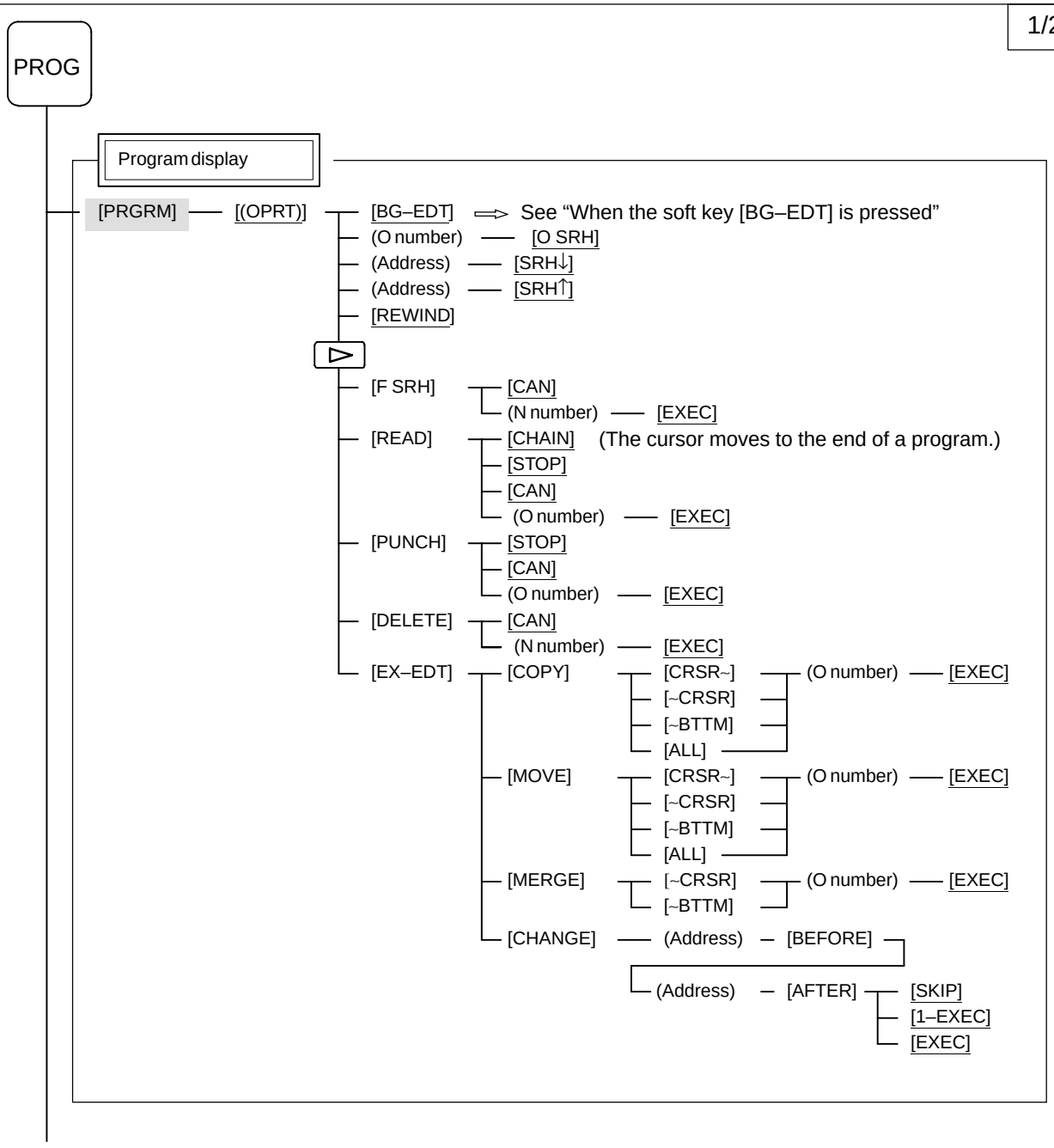

(1)(Continued on the next page)

2/2

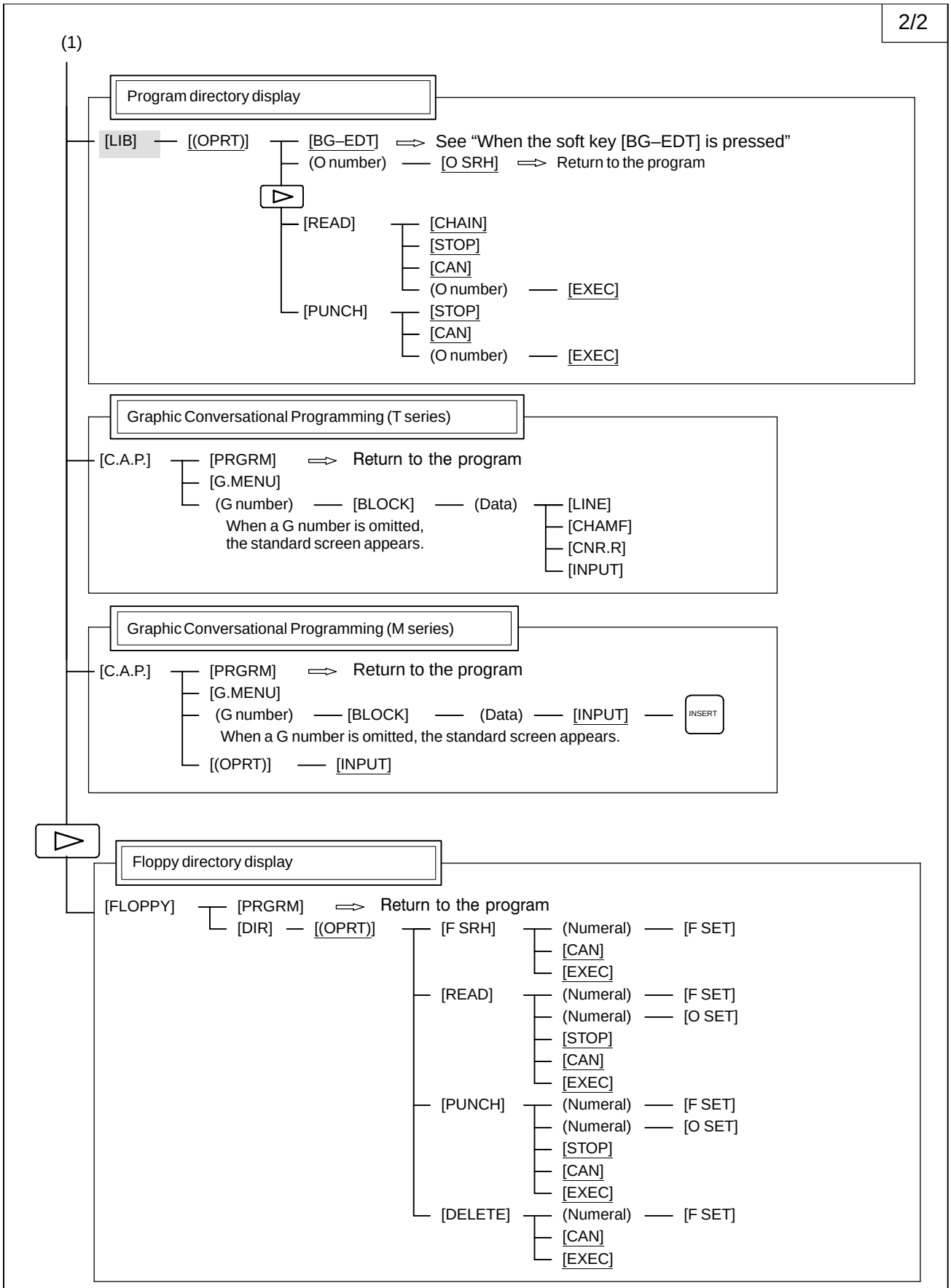
(1)
Program directory display
[LIB]
[(OPRT)]
[BG–EDT]
See "When the soft key [BG–EDT] is pressed"
(O number)
[O SRH]
Return to the program
[READ]
[CHAIN]
[STOP]
[CAN]
(O number)
[EXEC]
[PUNCH]
[STOP]
[CAN]
(O number)
[EXEC]
Graphic Conversational Programming (T series)
[C.A.P.]
[PRGRM]
Return to the program
[G.MENU]
(G number)
[BLOCK]
(Data)
[LINE]
[CHAMF]
[CNR.R]
[INPUT]
When a G number is omitted, the standard screen appears.
Graphic Conversational Programming (M series)
[C.A.P.]
[PRGRM]
Return to the program
[G.MENU]
(G number)
[BLOCK]
(Data)
[INPUT]
INSERT
When a G number is omitted, the standard screen appears.
[(OPRT)]
[INPUT]
Floppy directory display
[FLOPPY]
[PRGRM]
Return to the program
[DIR]
[(OPRT)]
[F SRH]
(Numeral)
[F SET]
[CAN]
[EXEC]
[READ]
(Numeral)
[F SET]
(Numeral)
[O SET]
[STOP]
[CAN]
[EXEC]
[PUNCH]
(Numeral)
[F SET]
(Numeral)
[O SET]
[STOP]
[CAN]
[EXEC]
[DELETE]
(Numeral)
[F SET]
[CAN]
[EXEC]

PROGRAM SCREEN

Soft key transition triggered by the function key PROG in the MDI mode

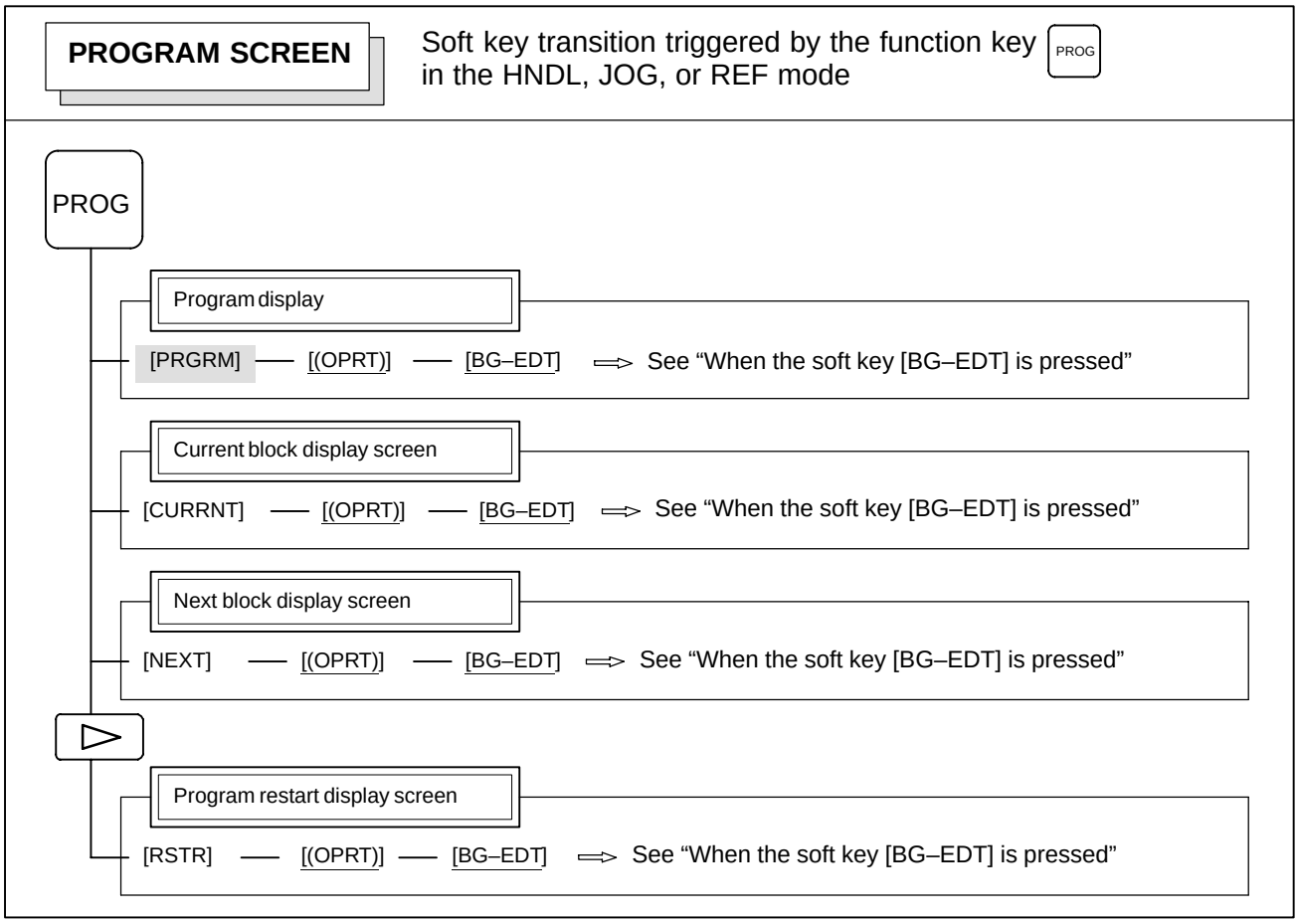
PROGRAM SCREEN
Soft key transition triggered by the function key PROG in the HNDL, JOG, or REF mode
PROG
Program display
[PRGRM] — [(OPRT)] — [BG–EDT] ⇨ See “When the soft key [BG–EDT] is pressed”
Current block display screen
[CURRNT] — [(OPRT)] — [BG–EDT] ⇨ See “When the soft key [BG–EDT] is pressed”
Next block display screen
[NEXT] — [(OPRT)] — [BG–EDT] ⇨ See “When the soft key [BG–EDT] is pressed”
▷
Program restart display screen
[RSTR] — [(OPRT)] — [BG–EDT] ⇨ See “When the soft key [BG–EDT] is pressed”

PROGRAM SCREEN

Soft key transition triggered by the function key PROG in the TJOG or THDL mode

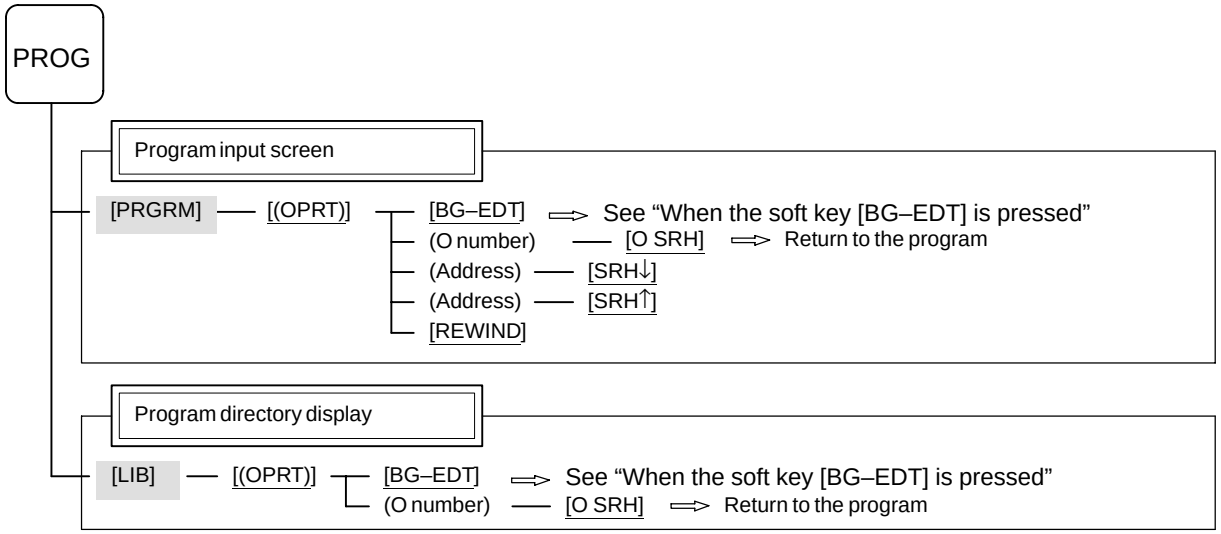

PROGRAM SCREEN

Soft key transition triggered by the function key PROG
(When the soft key [BG–EDT] is pressed in all modes)

1/2

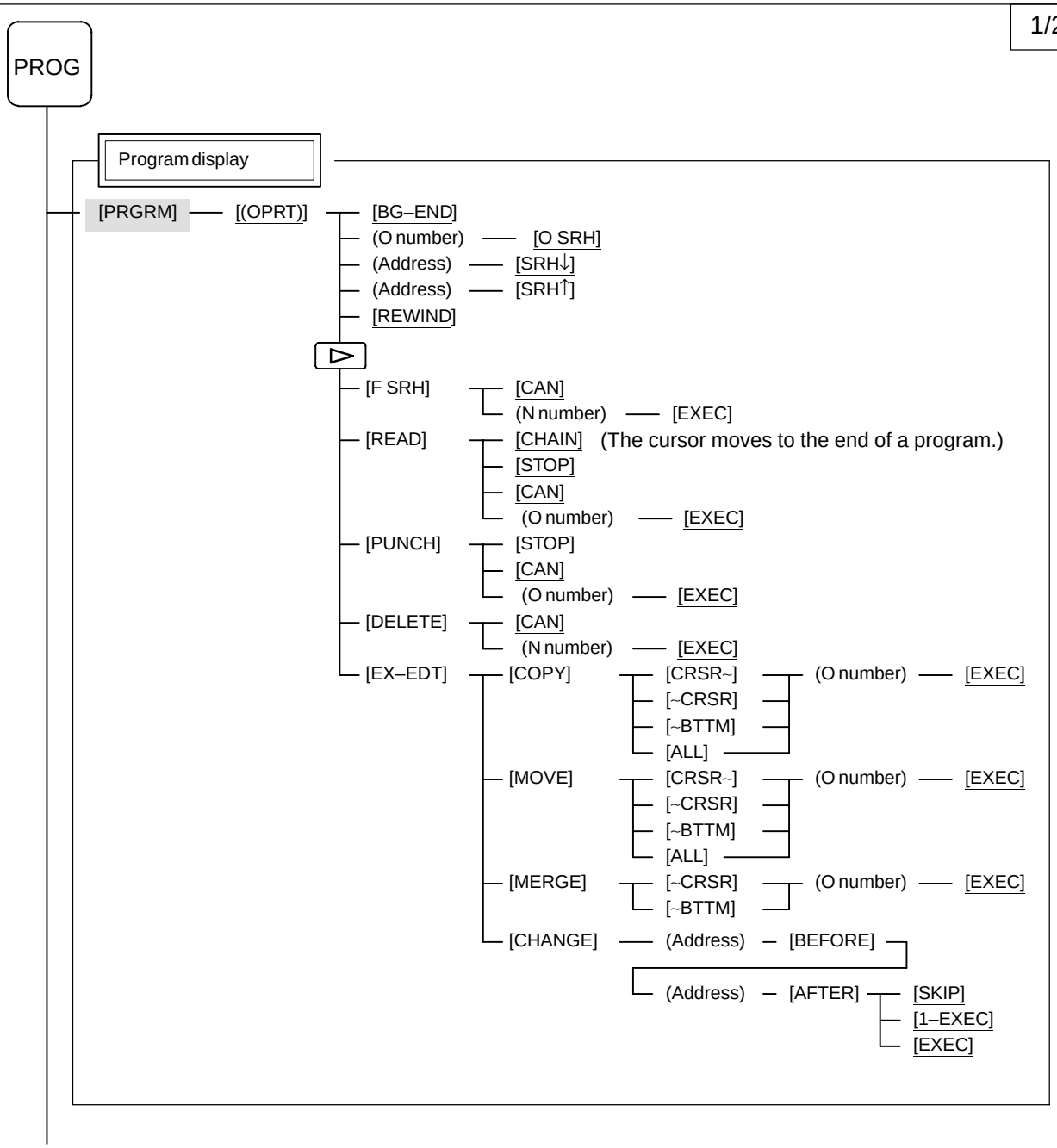

(1)(Continued on the next page)

2/2

(1)

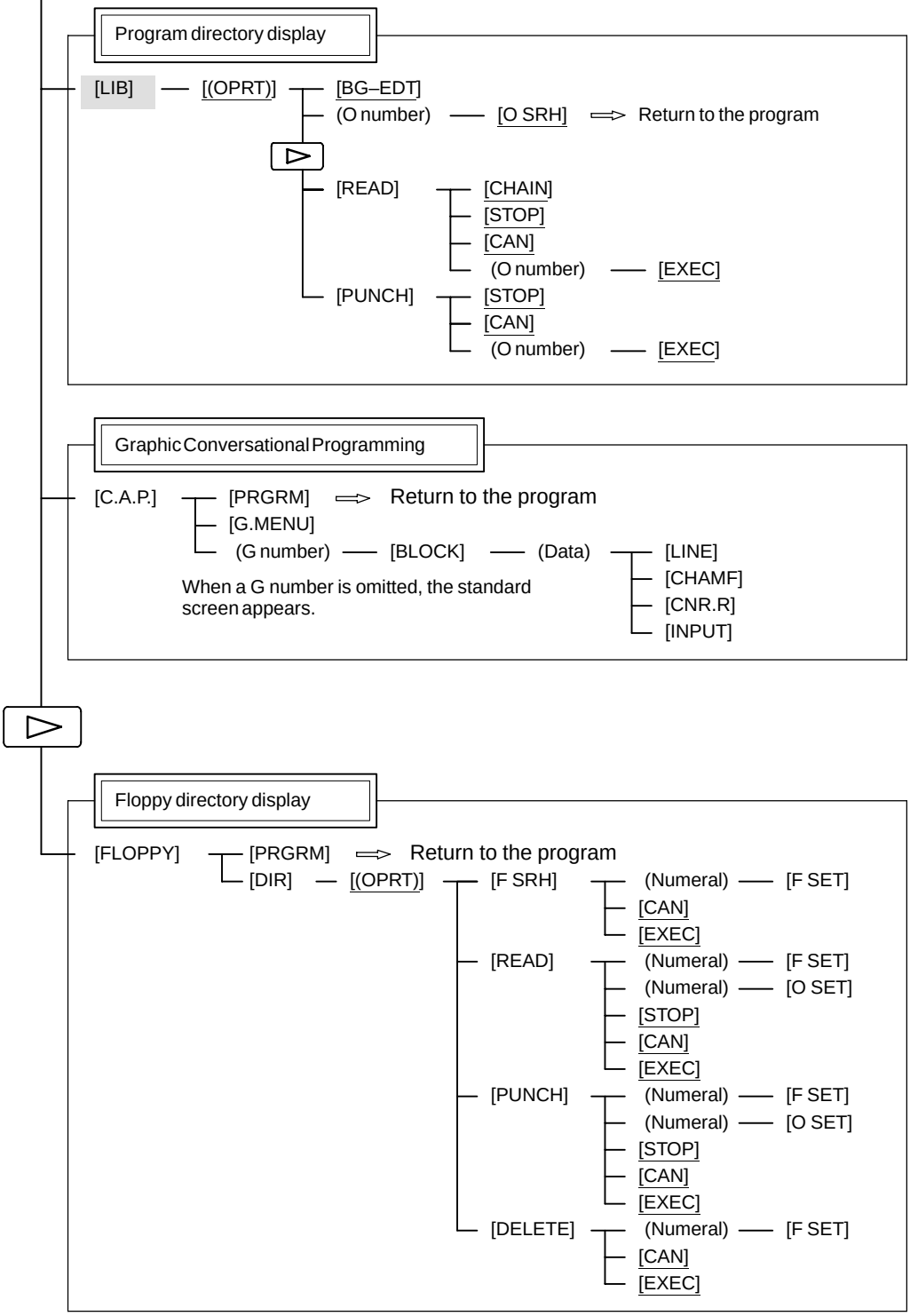
Program directory display
[LIB]
[(OPRT)]
[BG–EDT]
(O number)
[O SRH]
Return to the program
[READ]
[CHAIN]
[STOP]
[CAN]
(O number)
[EXEC]
[PUNCH]
[STOP]
[CAN]
(O number)
[EXEC]
Graphic Conversational Programming
[C.A.P.]
[PRGRM]
Return to the program
[G.MENU]
(G number)
[BLOCK]
(Data)
[LINE]
[CHAMF]
[CNR.R]
[INPUT]
When a G number is omitted, the standard screen appears.
Floppy directory display
[FLOPPY]
[PRGRM]
Return to the program
[DIR]
[(OPRT)]
[F SRH]
(Numeral)
[F SET]
[CAN]
[EXEC]
[READ]
(Numeral)
[F SET]
(Numeral)
[O SET]
[STOP]
[CAN]
[EXEC]
[PUNCH]
(Numeral)
[F SET]
(Numeral)
[O SET]
[STOP]
[CAN]
[EXEC]
[DELETE]
(Numeral)
[F SET]
[CAN]
[EXEC]

OFFSET/SETTING SCREEN (T series)

Soft key transition triggered by the function key OFFSET SETTING

1/2

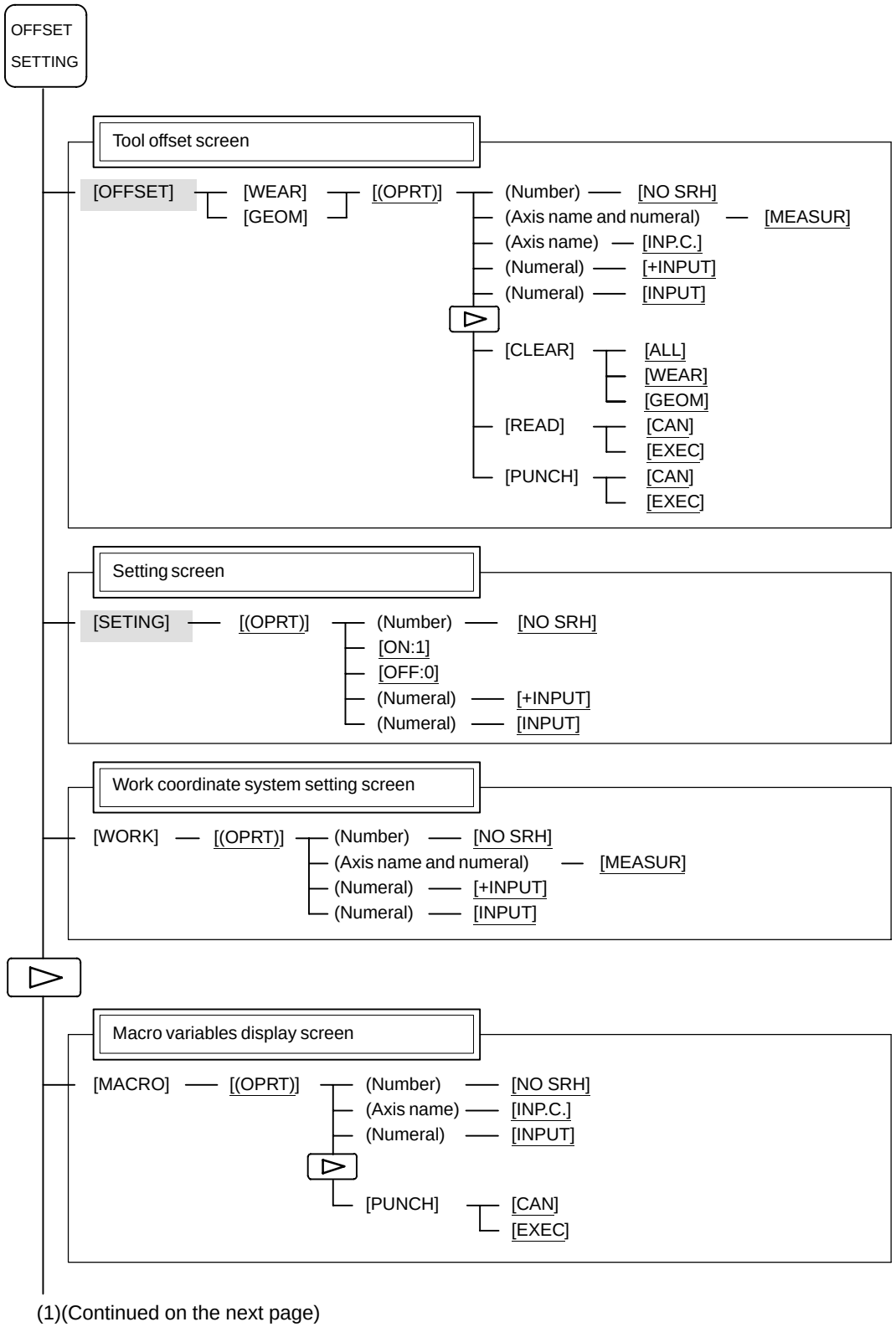

(1)(Continued on the next page)

2/2

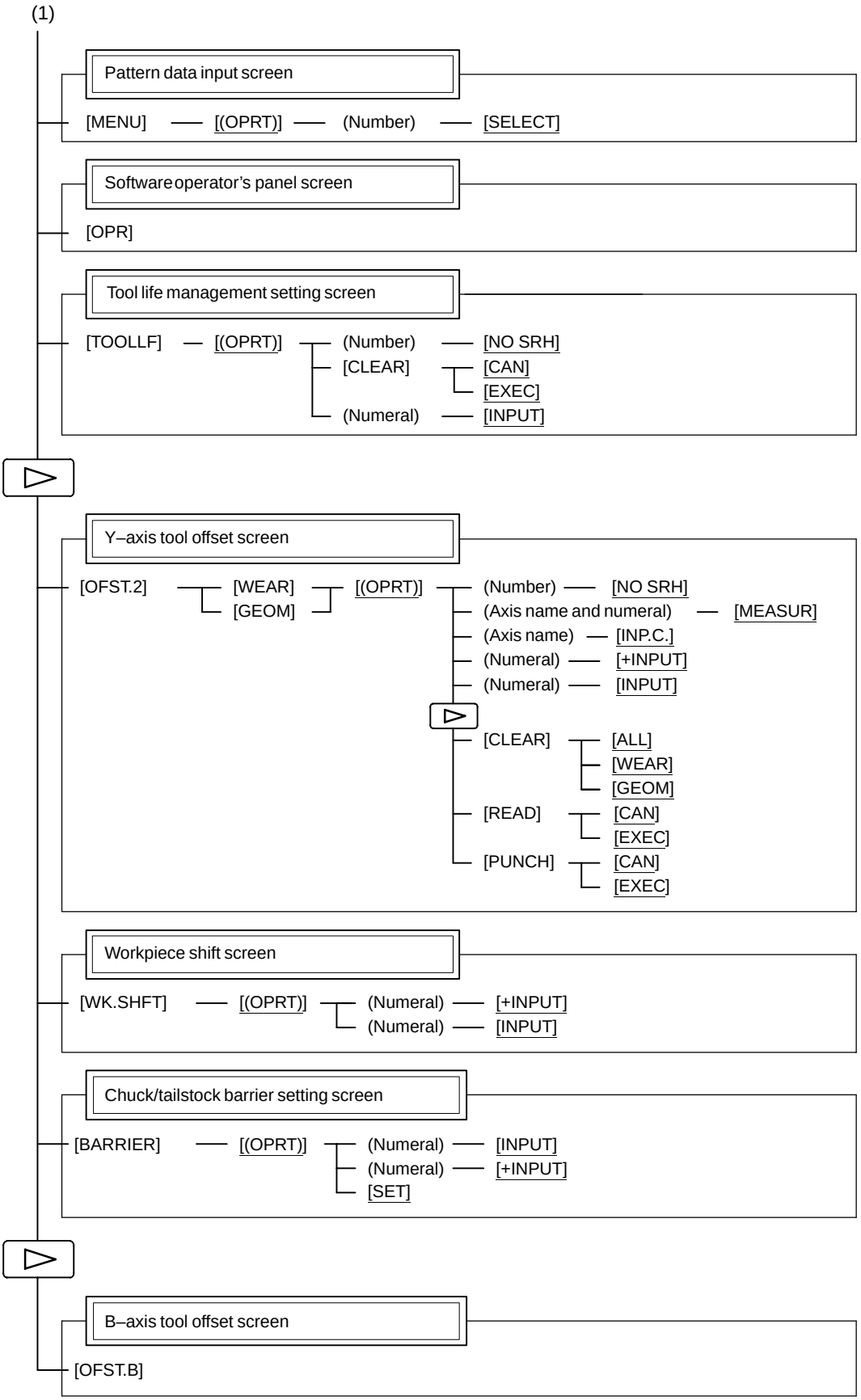
(1)
Pattern data input screen
[MENU] [(OPRT)] (Number) [SELECT]
Software operator's panel screen
[OPR]
Tool life management setting screen
[TOOLLF] [(OPRT)] (Number) [NO SRH]
[CLEAR] [CAN]
[EXEC]
(Numeral) [INPUT]
Y–axis tool offset screen
[OFST.2] [WEAR] [GEOM] [(OPRT)] (Number) [NO SRH]
(Axis name and numeral) [MEASUR]
(Axis name) [INP.C.]
(Numeral) [+INPUT]
(Numeral) [INPUT]
[CLEAR] [ALL]
[WEAR]
[GEOM]
[READ] [CAN]
[EXEC]
[PUNCH] [CAN]
[EXEC]
Workpiece shift screen
[WK.SHFT] [(OPRT)] (Numeral) [+INPUT]
(Numeral) [INPUT]
Chuck/tailstock barrier setting screen
[BARRIER] [(OPRT)] (Numeral) [INPUT]
(Numeral) [+INPUT]
[SET]
B–axis tool offset screen
[OFST.B]

OFFSET/SETTING SCREEN (M series)

Soft key transition triggered by the function key OFFSET SETTING

1/2

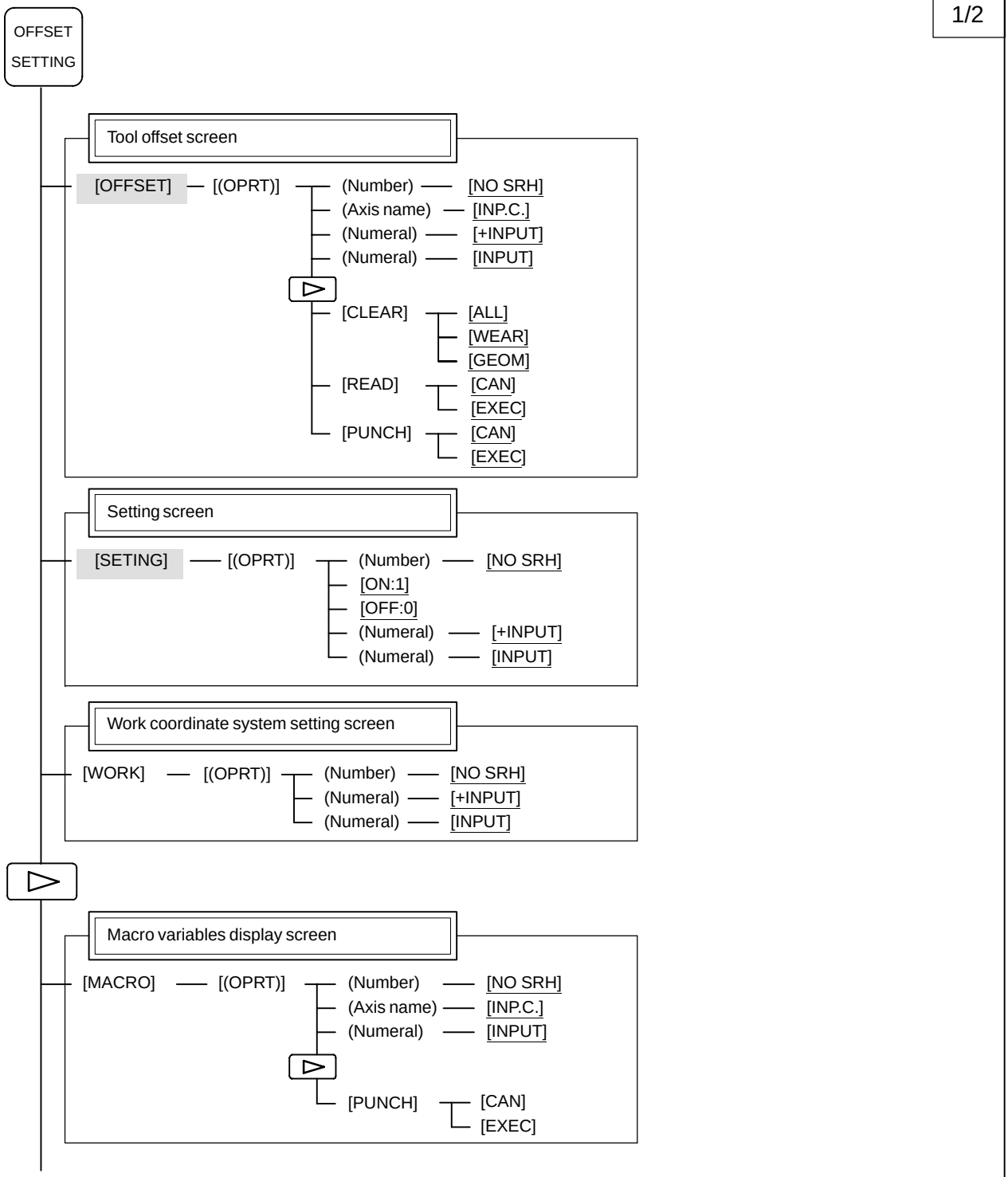

(1)(Continued on the next page)

2/2

(1)

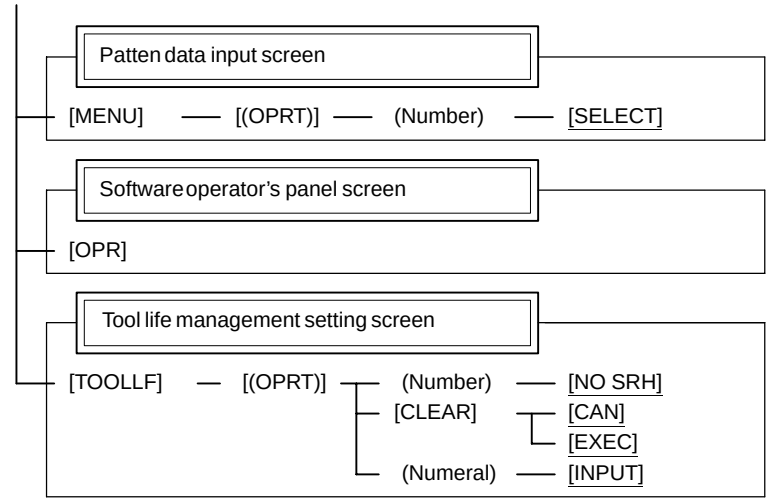
Patten data input screen
[MENU] — [(OPRT)] — (Number) — [SELECT]
Software operator's panel screen
[OPR]
Tool life management setting screen
[TOOLLF] — [(OPRT)] — (Number) — [NO SRH]
[CLEAR] — [CAN]
[EXEC]
(Numeral) — [INPUT]

SYSTEM SCREEN

Soft key transition triggered by the function key SYSTEM

1/3

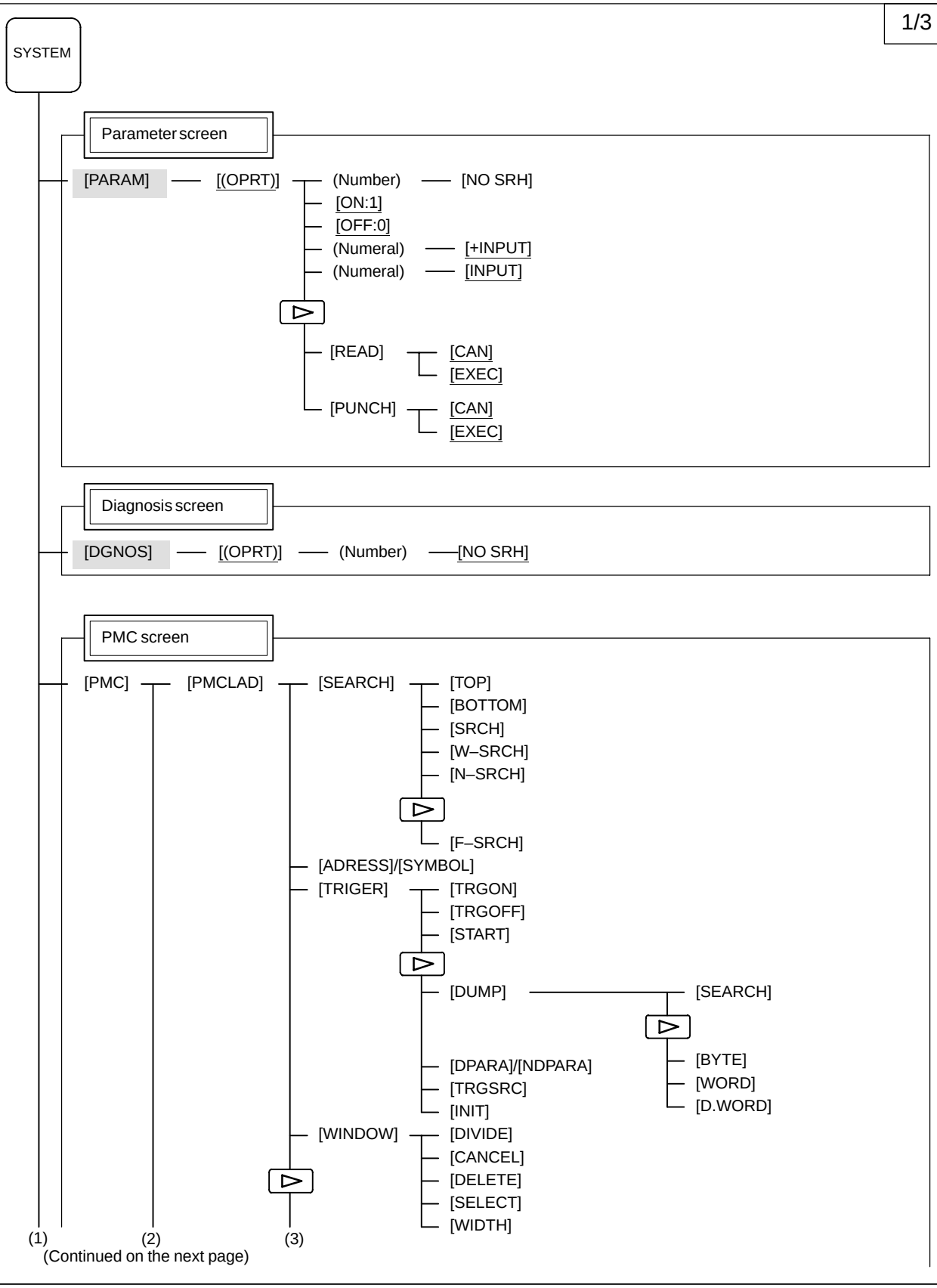

(Continued on the next page)

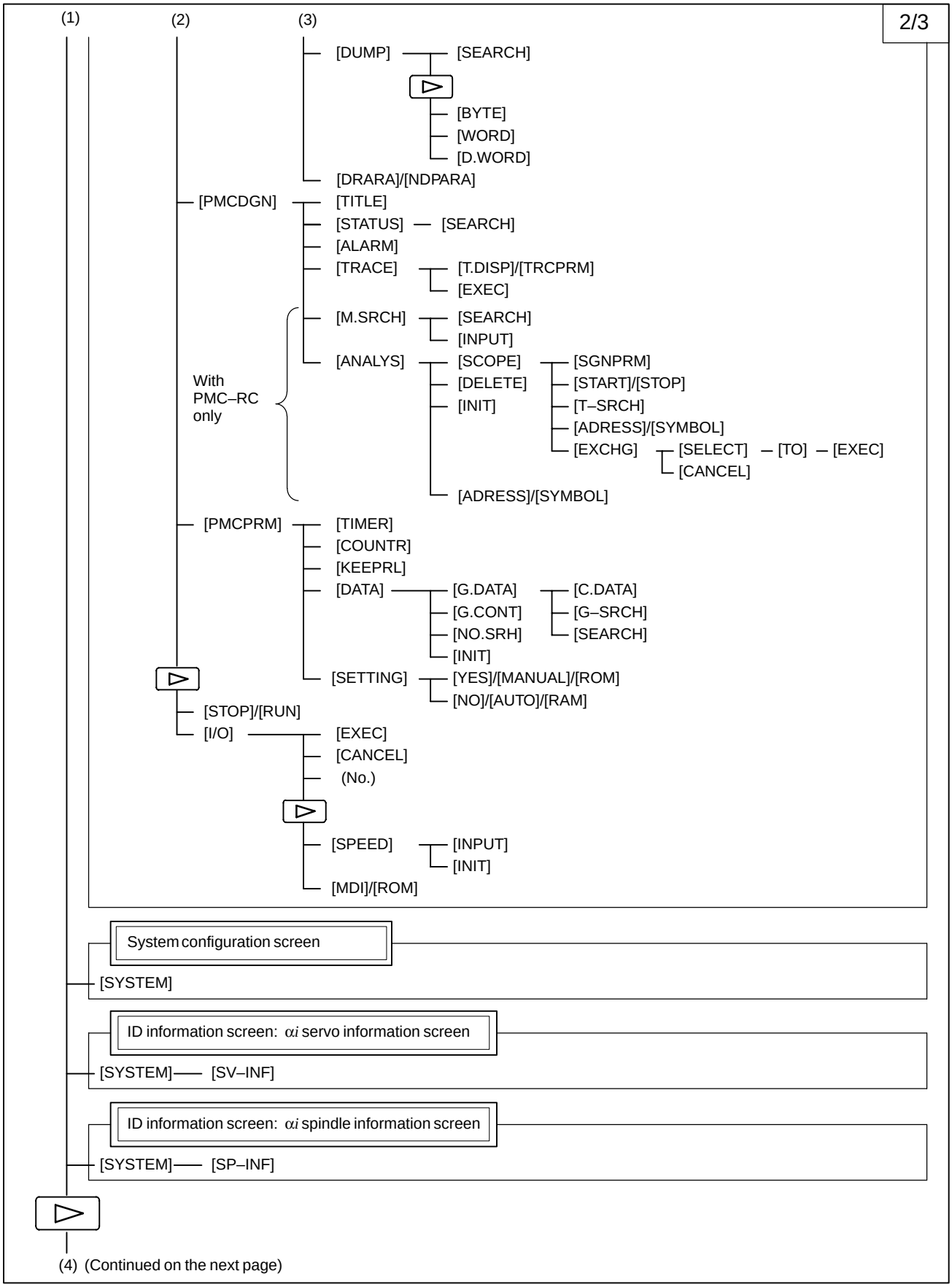
2/3
(1)
(2)
(3)
[DUMP]
[SEARCH]
[BYTE]
[WORD]
[D.WORD]
[DRARA]/[NDPARA]
[PMCDGN]
[TITLE]
[STATUS]
[SEARCH]
[ALARM]
[TRACE]
[T.DISP]/[TRCPRM]
[EXEC]
[M.SRCH]
[SEARCH]
[INPUT]
[ANALYS]
[SCOPE]
[SGNPRM]
[DELETE]
[START]/[STOP]
[INIT]
[T–SRCH]
[ADRESS]/[SYMBOL]
[EXCHG]
[SELECT]
[TO]
[EXEC]
[CANCEL]
[ADRESS]/[SYMBOL]
With PMC–RC only
[PMCPRM]
[TIMER]
[COUNTR]
[KEEPRL]
[DATA]
[G.DATA]
[C.DATA]
[G.CONT]
[G–SRCH]
[NO.SRH]
[SEARCH]
[INIT]
[SETTING]
[YES]/[MANUAL]/[ROM]
[NO]/[AUTO]/[RAM]
[STOP]/[RUN]
[I/O]
[EXEC]
[CANCEL]
(No.)
[SPEED]
[INPUT]
[INIT]
[MDI]/[ROM]
System configuration screen
[SYSTEM]
ID information screen: αi servo information screen
[SYSTEM]
[SV–INF]
ID information screen: αi spindle information screen
[SYSTEM]
[SP–INF]
(4) (Continued on the next page)

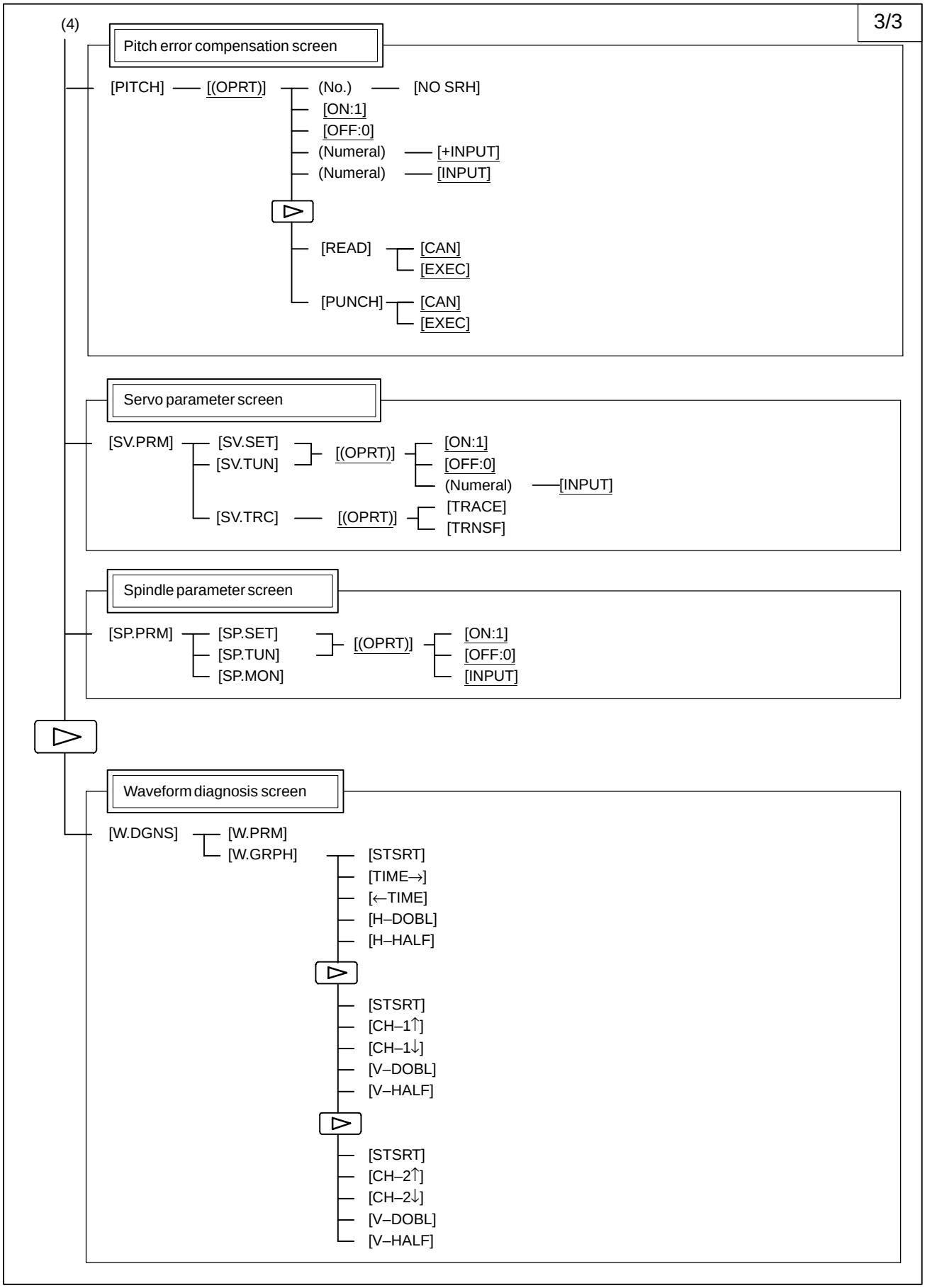
3/3
(4)
Pitch error compensation screen
[PITCH]
[(OPRT)]
(No.)
[NO SRH]
[ON:1]
[OFF:0]
(Numeral)
[+INPUT]
(Numeral)
[INPUT]
[READ]
[CAN]
[EXEC]
[PUNCH]
[CAN]
[EXEC]
Servo parameter screen
[SV.PRM]
[SV.SET]
[SV.TUN]
[(OPRT)]
[ON:1]
[OFF:0]
(Numeral)
[INPUT]
[SV.TRC]
[(OPRT)]
[TRACE]
[TRNSF]
Spindle parameter screen
[SP.PRM]
[SP.SET]
[SP.TUN]
[SP.MON]
[(OPRT)]
[ON:1]
[OFF:0]
[INPUT]
Waveform diagnosis screen
[W.DGNS]
[W.PRM]
[W.GRPH]
[STSRT]
[TIME→]
[←TIME]
[H–DOBL]
[H–HALF]
[STSRT]
[CH–1↑]
[CH–1↓]
[V–DOBL]
[V–HALF]
[STSRT]
[CH–2↑]
[CH–2↓]
[V–DOBL]
[V–HALF]

MESSAGE SCREEN

Soft key transition triggered by the function key MESSAGE

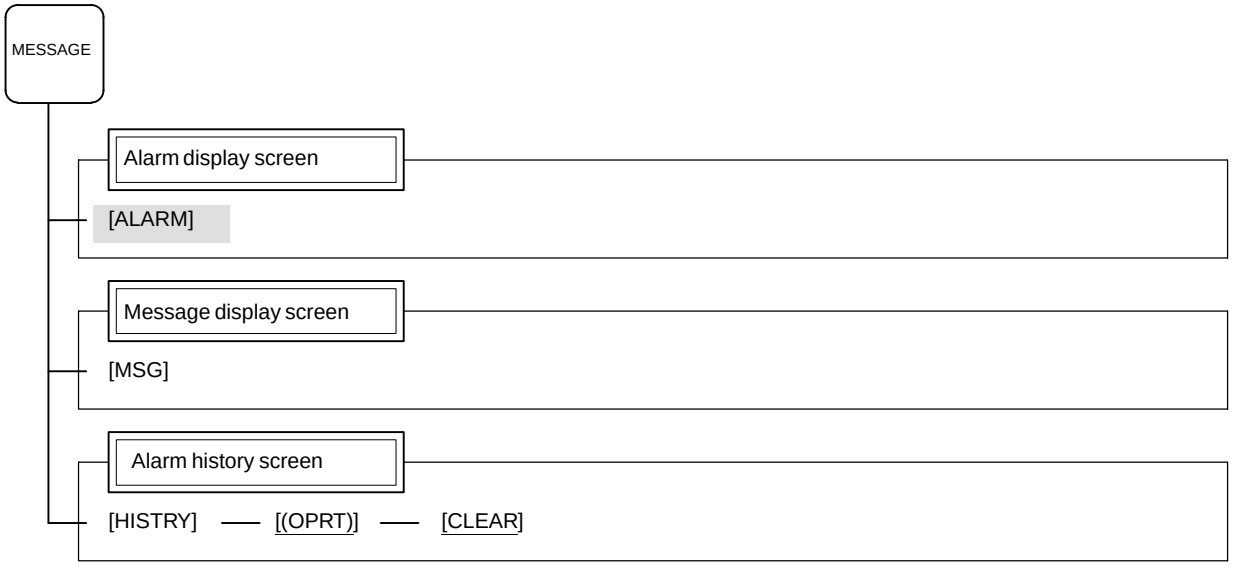

HELP SCREEN

Soft key transition triggered by the function key HELP

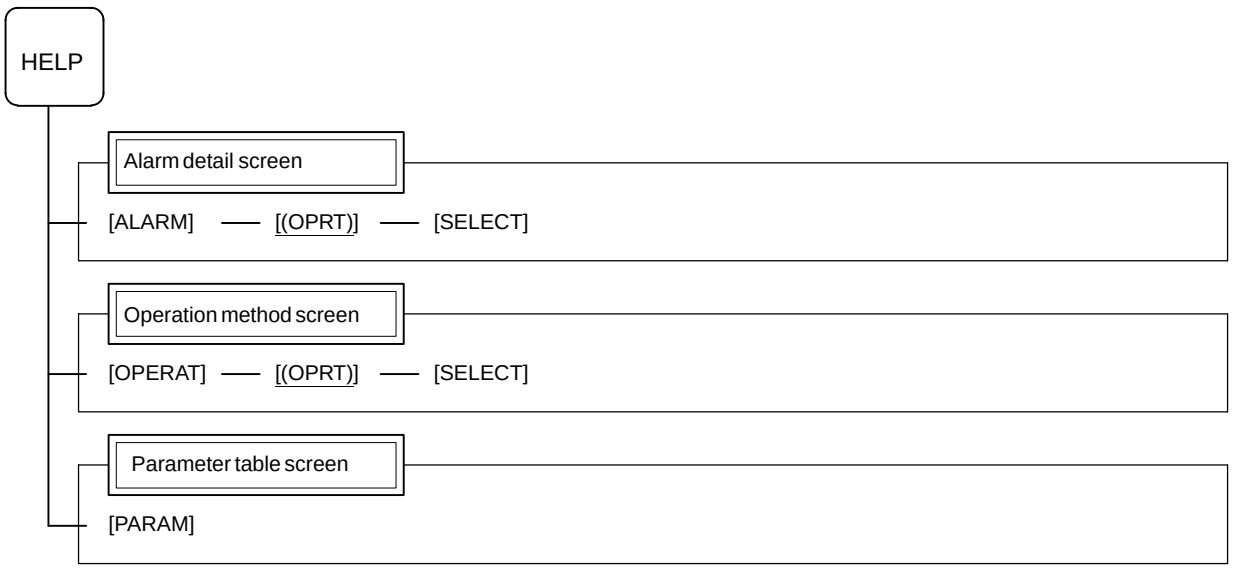

GRAPHIC SCREEN (T series)

Soft key transition triggered by the function key GRAPH

Tool path graphics

Mode 0

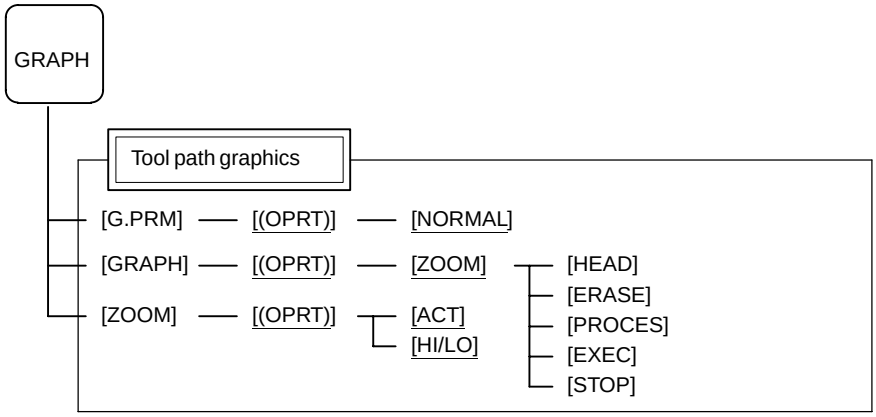

A.ST/Path graphics

Mode 1 to 3

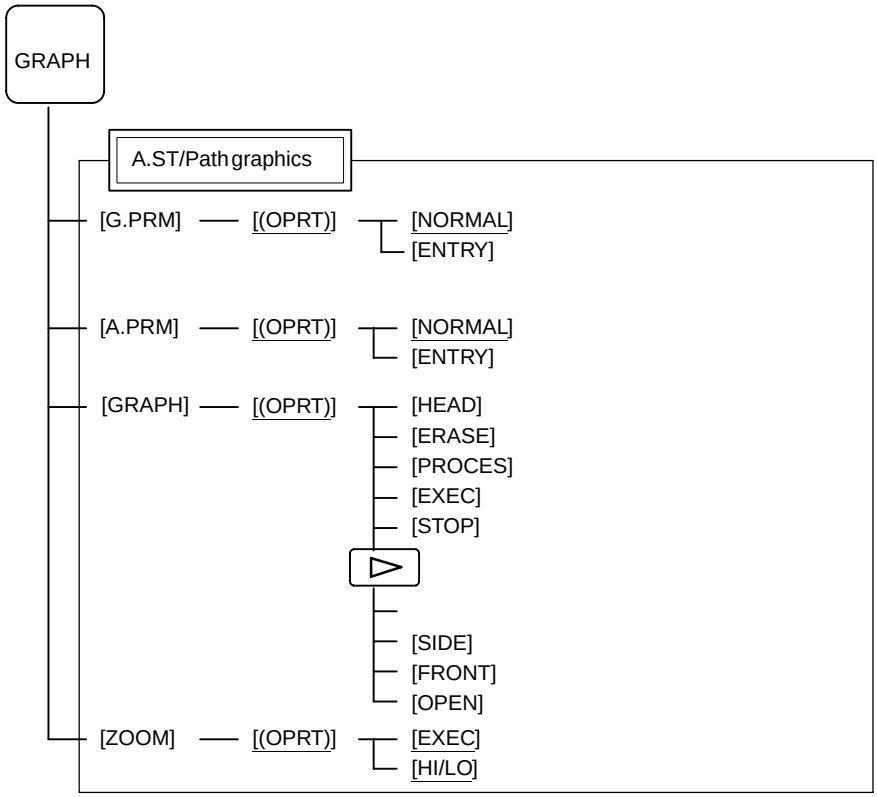

GRAPHIC SCREEN (M series)

Soft key transition triggered by the function key GRAPH

Tool path graphics

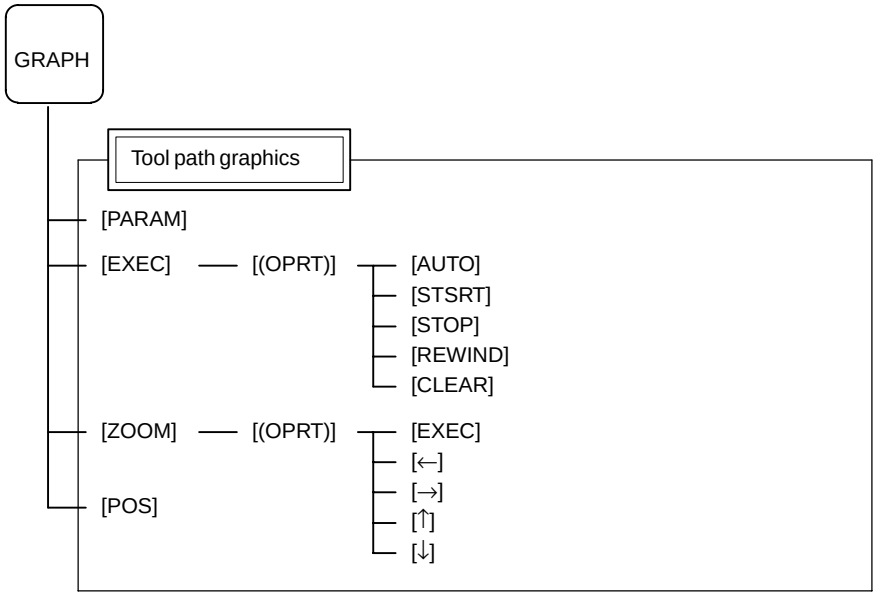

Solid graphics

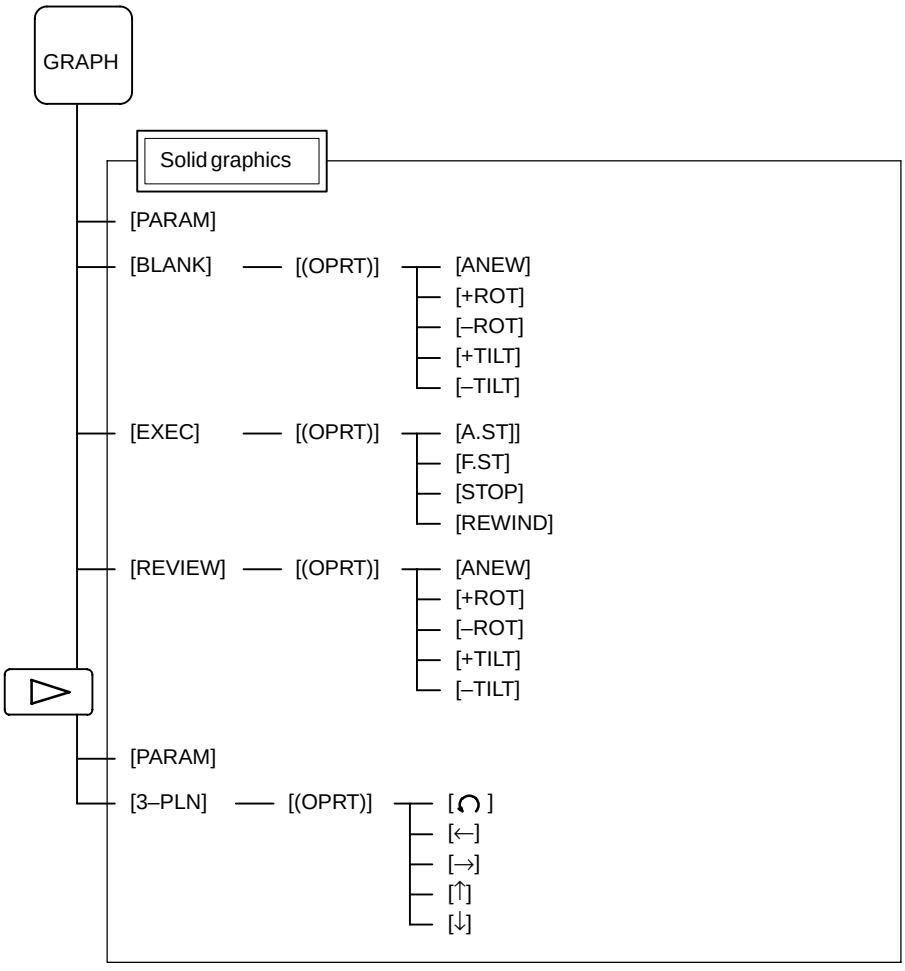

1.2 SCREEN DISPLAYED IMMEDIATELY AFTER POWER IS TURNED ON

1.2.1 Slot Status Display

Types of PCBs mounted on the slots are displayed.
If a hardware trouble or an incorrect mounting is found, this screen is displayed.

- **Slot state screen**

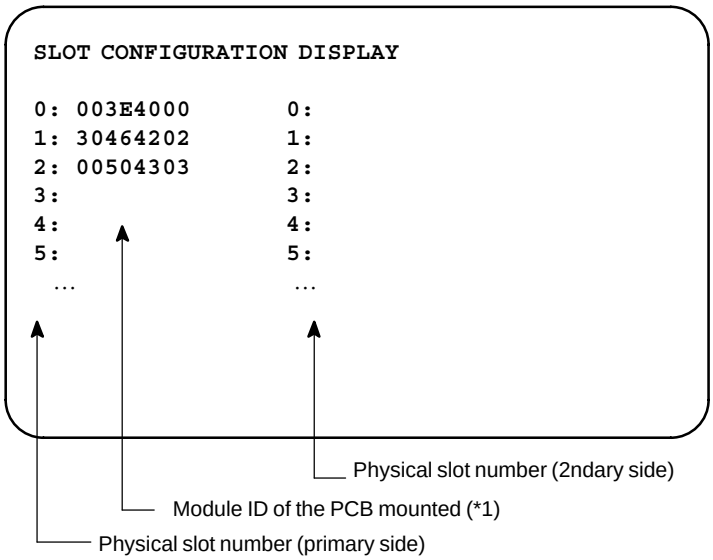

*1) Module ID of PCB

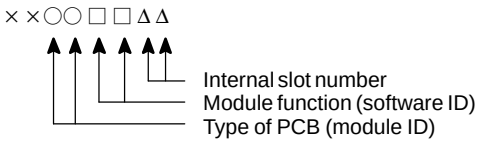

- **Module ID**

ID	Name
D5	Series 16*i* motherboard
C5	Series 18*i* motherboard
CC	Series 160*i* motherboard
EC	Series 180*i* motherboard
CD	Serial communication board: remote buffer/DNC2
	Serial communication board: DNC1
	C language board
	CAP II board
CE	Sub–CPU board
CF	RISC board
A3	Data server board
D3	Loader control board
AA	HSSB interface board
C9	PC function card

- **Software ID**

40 : Main CPU
41 : C language
43 : Sub CPU
49 : CAP II
4A : Remote buffer
4F : PMC–RE
53 : Loader control
59 : RISC board for high–precision contour control
5E : HSSB interface (with PC)

1.2.2 Setting Module Screen

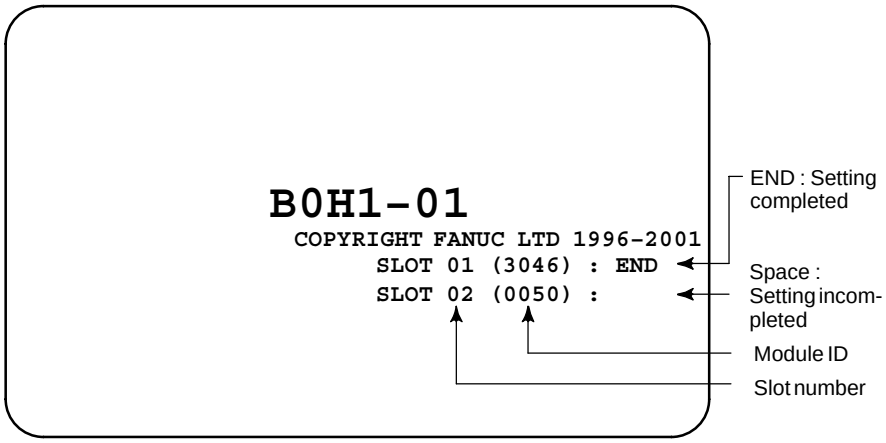

1.2.3 Configuration Display of Software

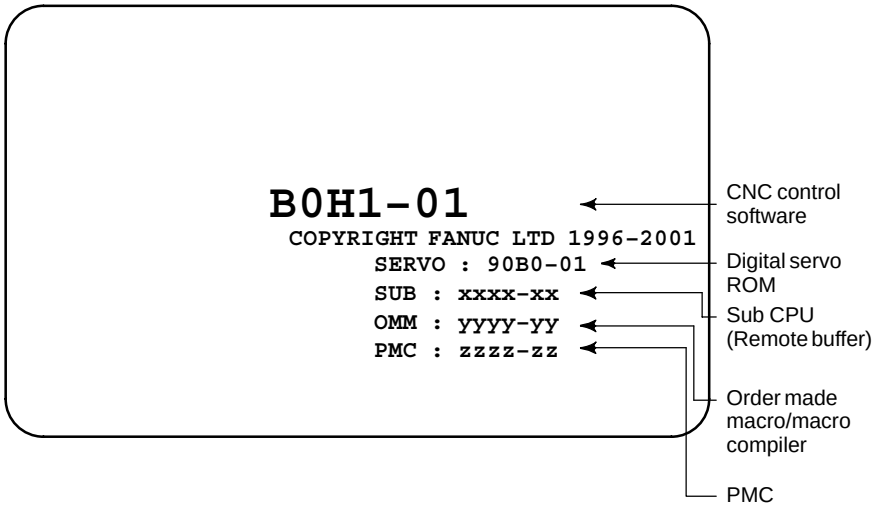

1.3 SYSTEM CONFIGURATION SCREEN

After the system has been installed correctly, you can find the PCBs installed and the softwares integrated on the system configuration screen.

1.3.1 Display Method

(1) Press [SYSTEM] key.

(2) Press soft key **[SYSTEM]**, then the system configuration screen is displayed.

(3) The system configuration screen is composed of three screens and each of them can be selected by the page key [PAGE↑] [PAGE↓].

1.3.2 Configuration of PCBs

- **Screen**

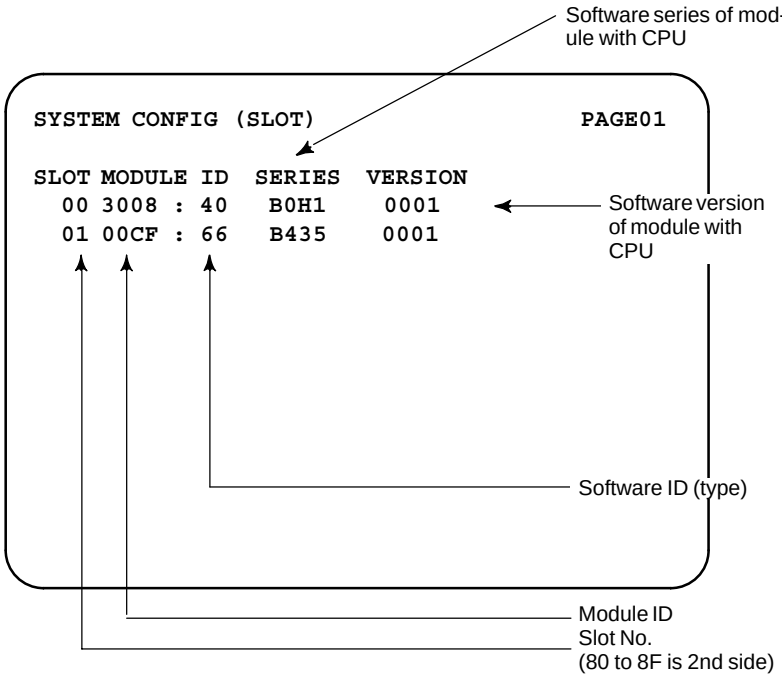

- **Module ID**

ID	Name
D5	Series 16*i* motherboard
C5	Series 18*i* motherboard
CC	Series 160*i* motherboard
EC	Series 180*i* motherboard
CD	Serial communication board: remote buffer/DNC2
	Serial communication board: DNC1
	C language board
	CAP–II board
CE	Sub–CPU board
CF	RISC board
A3	Data server board
D3	Loader control board
AA	HSSB interface board
C9	PC function card

- **Software ID**

40 : Main CPU
41 : C language
43 : Sub CPU
49 : CAP II
4A : Remote buffer
4F : PMC–RE
53 : Loader control
59 : RISC board for high–precision contour control
5E : HSSB interface (with PC)

1.3.3 Software Configuration Screen

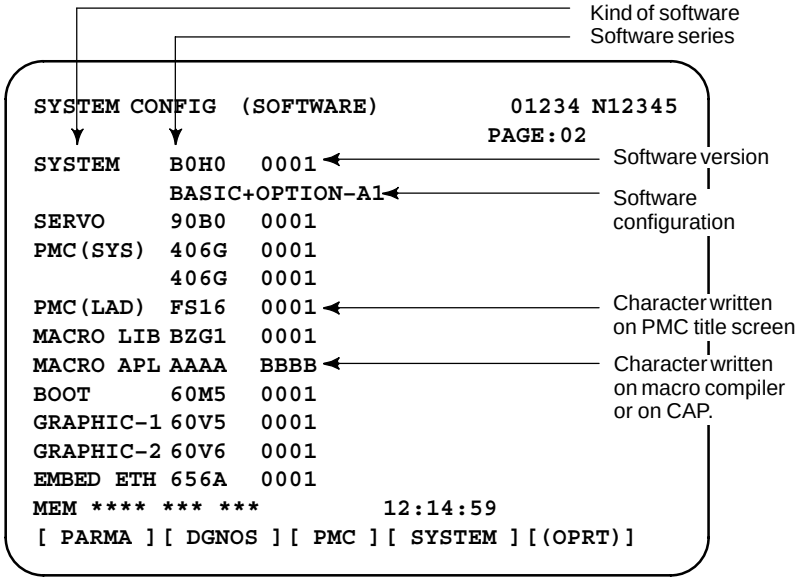

1.3.4 Module Configuration Screen

Configuration of the modules displayed on PCB.

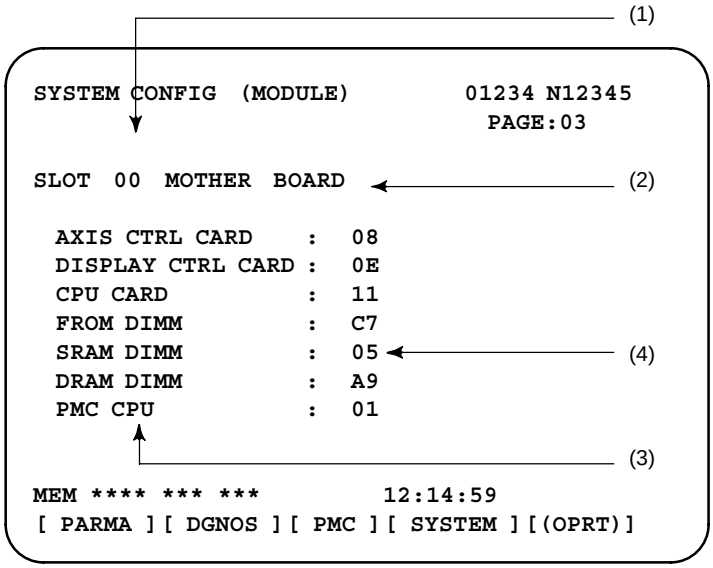

Contents of display

(1) Slot number (The number is corresponding to PCB configuration screen)

(2) Type of PCB mounted

(3) Name of card PCB or DIMM module

(4) Hardware ID of mounted card PCB or DIMM module
Refer to “2.5.4 Printed Circuit Boards of the Control Unit” for correspondence with each hardware ID and drawing number.

Pressing the PAGE key 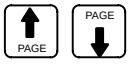 displays the system configuration screen of other PCBs.

1.3.5 ID Information Screen (αi Servo Information Screen/αi Spindle Information Screen)

- αi series servo and αi series spindle
  When the αi servo/αi spindle system is connected, ID information owned by connected units (motor, amplifier, module, etc.) for αi servo/αi spindle can be displayed on the CNC screen.
  See below for details.
  - αi servo information screen (Chapter 9 Digital Servo)
  - αi spindle information screen (Chapter 10 AC Spindle (Serial Spindle))

1.4 ALARM HISTORY SCREEN

1.4.1 Alarm History Screen

1.4.1.1 General

Alarms generated in the NC are recorded. The latest 25 alarms generated are recorded. The 26th and former alarms are deleted.

1.4.1.2 Screen Display

(1) Press MESSAGE key .

(2) Press soft key **[HISTRY]** and an alarm history screen is displayed.

(3) Other pages are displayed by PAGE ↑ or PAGE ↓ key.

```
ALARM HISTORY                          O1234 N12345

01/04/18 20:56:26
 506 OVERTRAVEL :  +X
01/04/18 19:58:11
 000 TURN OFF POWER
01/04/18 19:52:45
 000 TURN OFF POWER
01/04/18 19:48:43
 300 APC ALARM  : X-AXIS ZERO RETURN REQUEST
01/04/18 18:10:10
 507 OVERTRAVEL :  +B



[ ALARM ][ MSG ][ HISTRY ][       ][(OPRT)]
```

1.4.1.3 Clearing Alarm History

(1) Press soft key **[(OPRT)]**.

(2) Press soft key **[(CLEAR]**, then the alarm history is cleared.

1.4.1.4 Alarm Display

When an external alarm (No. 1000 to 1999) or a macro alarm (No. 3000 to 3999) is output, the alarm history function can record both the alarm number and message if so specified in the following parameter. If recording of the message is not set or if no message is input, only an external alarm or macro alarm is displayed.

	#7	#6	#5	#4	#3	#2	#1	#0
3112					EAH			

[Data type] Bit

#3 (EAH) The alarm history function:

0 : Does not record the messages output with external alarms or macro alarms.

1 : Records the messages output with external alarms or macro alarms.

1.4.2 System Alarm History

1.4.2.1 General

Up to three system alarms issued in the past are stored, and information about those alarms can be displayed on the system alarm history screen.

```
SYSTEM ALARM HISTORY                O1234 N12345

1  2001-03-13 12:13:19
    930   CPU  INTERRUPT
2  2001-03-11 07:23:07
    900   ROM  PARITY
3  2001-02-27
    973   NON  MASK INTERRUPT




EDIT **** *** ***          08:20:52
[       ][       ][ NMIHIS ][       ][       ]
```

1.4.2.2 System alarm history screen (history list screen)

By setting bit 2 (NMH) of parameter No. 3103 to 1, information about up to three system alarms including the latest system alarm can be displayed. The latest system alarm information is displayed at the top of the list, and a lower item in the list indicates older system alarm information.

Procedure

1 Set bit 2 (NMH) of parameter No. 3103 to 1.

2 Press the function key <MESSAGE>.

3 Press the [NMIHIS] chapter selection soft key.

The following information is displayed:

1. System alarm occurrence date and time
2. System alarm number
3. System alarm message (No message is displayed for some system alarms.)

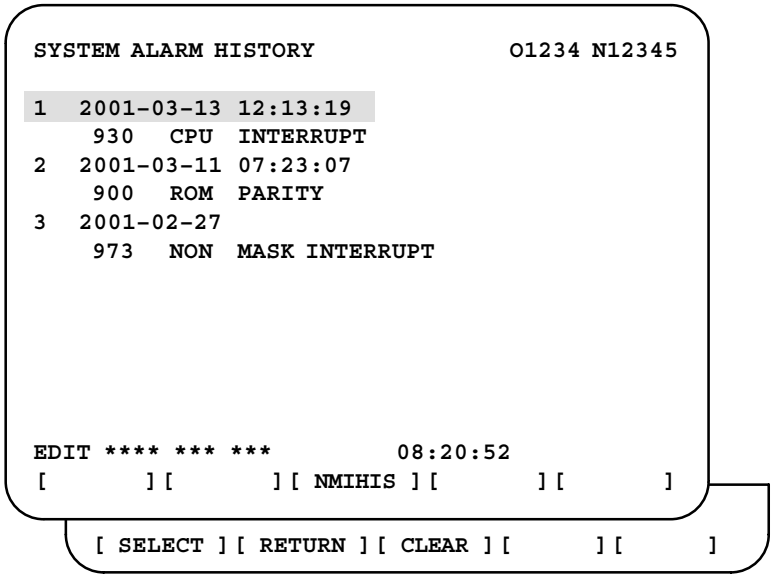

[SELECT] soft key

This soft key displays the details of a system alarm.

Procedure

1 Press the [(OPRT)] soft key on the system configuration screen.

2 By using the cursor keys PAGE ↑ PAGE ↓, move the cursor to the system alarm number whose details are to be displayed.

3 Press the [SELECT] soft key.

4 The details of the selected system alarm are displayed.

[CLEAR] soft key

This soft key clears all system alarm information stored.

When bit 4 (OPC) of parameter No. 3110 is set to 1, this soft key is displayed. When bit 4 (OPC) of parameter No. 3110 is set to 0, this soft key is not displayed.

Procedure

1 Set bit 4 (OPC) of parameter No. 3110 to 1.

2 Press the [(OPRT)] soft key on the system configuration screen.

3 Press the [CLEAR] soft key.

4 Information about all of the three system alarms stored is cleared.

[RETURN] soft key

Pressing the [RETURN] soft key while system alarm history screen (detail screen) is displayed returns the screen display to the system alarm list screen.

1.4.2.3 System alarm history screen (detail screen)

The system alarm history screen (detail screen) displays information items such as registers and stacks involved when a system alarm is issued.

The following items are displayed:

1. System alarm occurrence date and time
2. System alarm number
3. System alarm message (No message is displayed for some system alarms.)
4. System alarm occurrence series and edition
5. Number of display pages
6. General–purpose resistor, pointer index register, segment register, task register, LDT register, flag register, interrupt source, error code, error address
7. Contents of stacks (up to 32 stacks)
8. Contents of stacks of privilege level 3 (up to 48 stacks)
9. NMI information

You can switch among the information items 6 to 9 by the page keys 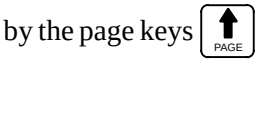

.

Pressing the [RETURN] soft key returns the screen display to the state alarm history list screen.

```
SYSTEM ALARM HISTORY                O1234 N12345

2  2001-03-11 07:23:07       BDH1-01(1/4)
   973 NON MASK INTERRUPT
EAX       EBX       ECX       EDX
00000000  00930063  000003E0  00000040
ESI       EDI       EBP       ESP
00000010  009404E0  0000FFB4  0000FFDC
SS   DS   ES   FS   GS   TR   LDTR
06D8 0338 0248 0440 0338 0628 0028
EFLAGS    VECT      ERRC      ERROR-ADDRESS
00003046  FFFF      0000      03E0:000009BC


EDIT **** *** ***          08:20:52
[ SELECT ][ RETURN ][ CLEAR ][      ][      ]
```

(Detail display screen 1)

```
SYSTEM ALARM HISTORY              O1234 N12345

2  2001-03-11 07:23:07      BDH1-01(2/4)
   973 NON MASK INTERRUPT

STACK  (PL0)
3646 0338 7CBA 0001 0958 FFF8 0068 0063
0346 0000 0000 02BC 08F8 52F1 2438 0338
0580 0440 0580 001F 03C0 0214 0780 0FFF
0000 0000 0000 0000 0000 0000 0000 0000



EDIT **** *** ***         08:20:52
[ SELECT ][ RETURN ][ CLEAR ][      ][      ]
```

(Detail display screen 2)

```
SYSTEM ALARM HISTORY              O1234 N12345

2  2001-03-11 07:23:07      BDH1-01(3/4)
   973 NON MASK INTERRUPT
  STACK!(PL3)
SS:ESP3 =0804:00007C50
CS:EIP =1350:00001234
  1008 1408 0001 0002 0003 0004 1008 FFE4
  1008 3678 00FA 0024 0000 0000 0000 0000
  0000 0000 0000 0000 0000 0000 0000 0000
  0000 0000 0000 0000 0000 0000 0000 0000
  0000 0000 0000 0000 0000 0000 0000 0000
  0000 0000 0000 0000 0000 0000 0000 0000

EDIT **** *** ***         08:20:52
[ SELECT ][ RETURN ][ CLEAR ][      ][      ]
```

(Detail display screen 3)

```
SYSTEM ALARM HISTORY              O1234 N12345

2  2001-03-11 07:23:07      BDH1-01(4/4)
   973 NON MASK INTERRUPT
NMIC
00000000  00000000  00000000  00000000
SVL
11111111  11111111
SVR
11111111  11111111  11111111  11111111
11111111  11111111  11111111  11111111
ADRS
007F0000

EDIT **** *** ***         08:20:52
[ SELECT ][ RETURN ][ CLEAR ][      ][      ]
```

(Detail display screen 4)

CAUTION
1 In the case of an NMI on other than the main board, the registers of detail display screen 1, and the contents of detail display screen 2 and detail display screen 3 are displayed.

```
SYSTEM ALARM HISTORY                O1234 N12345

2  2001-03-11 07:23:07       BDH1-01(1/1)
   972 NMI OCUURRED IN OTHER MODULE

SLOT> 02        0080415F
       <1>          <2>









EDIT **** *** ***          08:20:52
[ SELECT ][ RETURN ][ CLEAR ][      ][      ]
```

(Detail display screen 5)

<1> NMI occurrence slot number
<2> Message address set with the NMI occurrence slot (string address)

```
SYSTEM ALARM HISTORY                O1234 N12345

2  2001-03-11 07:23:07       BDH1-01(1/1)
   900 ROM PARITY

00000000     00000000
                    <1>









EDIT **** *** ***          08:20:52
[ SELECT ][ RETURN ][ CLEAR ][      ][      ]
```

(Detail display screen 6)

<1> ROM parity cause

Basic ROM (800000A97FFFF)	2F(h)
Additional ROM (A00000AA3FFFF)	40(h)
OMM ROM	80(h)
Servo ROM	100(h)
Built in MMC ROM	200(h)
Online Custom Screen	400(h)

1.4.2.4 Parameter

	#7	#6	#5	#4	#3	#2	#1	#0
3103						NMH		

[Data type] Bit

NMH The system alarm history screen is:

0 : Not displayed.
1 : Displayed.

	#7	#6	#5	#4	#3	#2	#1	#0
3110				OPC				

[Data type] Bit

OPC On the operation history screen, the [CLEAR] soft key is:

0 : Not enabled.
1 : Enabled.

1.5 EXTERNAL OPERATOR MESSAGES RECORD

This function enables the saving of external operator messages as a record.
The record can be viewed on the external operator message history screen.

1.5.1 Screen Display

(1) Press the MESSAGE function key.

(2) Press the rightmost soft key [>>].

```
[ALARM] [MGS] [HISTRY] [     ] [ (OPRT) ]>>
                                        ↑
```

(3) Press the **[MSGHIS]** soft key.

(4) To display the previous or subsequent screen, press the PAGE ↑ or PAGE ↓ key.

```
MESSAGE HISTORY                O1234 N12345
01/04/01 17:25:00                 PAGE : 1
 No. ****

                Up to 255 characters

 MEM STRT MTN FIN ALM 17:25:00
[       ][ MSGHIS ][       ][       ][       ]
```

→ Date, time, and page
→ Message No.
Display range

1.5.2 Deletion of External Operator Messages Record

(1) The recorded external operator message can be deleted by setting the MMC bit (bit 0 of parameter 3113) to 1.
Pressing the **[CLEAR]** soft key erases all the records of the external operator message.

(2) The MS1 and MS0 bits (bits 7 and 6 of parameter 3113) specify the number of records to be displayed on the external operator message history screen. When the bits are changed, all external operator message records retained up to that point are erased.

1.5.3 Parameter

	#7	#6	#5	#4	#3	#2	#1	#0
3113	MS1	MS0						MHC

#0 (MHC) The records of an external operator message:

0 : Cannot be erased.
1 : Can be erased.

#6, #7 (MS0,MS1) These bits set the number of characters to be retained in each record of an external operator message, as well as the number of records, as shown in the following table:

MS1	MS0	Number of characters in each record	Number of records
0	0	255	8
0	1	200	10
1	0	100	18
1	1	50	32

* An external operator message of up to 255 characters can be specified. Combining the MS1 bit and MS0 bit (bits 7 and 6 of parameter No. 3113) selects the number of records by limiting the number of characters to be retained as the record of an external operator message.

	#7	#6	#5	#4	#3	#2	#1	#0
3112						OMH		

#2 (OMH) The external operator message history screen is:

0 : Not displayed.
1 : Displayed.

NOTE
After setting this parameter, briefly turn the power off, then on again.

1.5.4 Notes

When the number of an external operator message is specified, the system starts updating the records of the specified message. The system continues to perform update until another external operator message is specified or until an instruction to delete the records of the external operator message is specified.

1.6 OPERATION HISTORY

This function displays the key and signal operations performed by the operator upon the occurrence of a fault or the output of an alarm, together with the corresponding alarms.
This function records the following data:

(1) MDI key operations performed by the operator

(2) Status changes (ON/OFF) of input and output signals (selected signals only)

(3) Details of alarms

(4) Time stamp (date and time)

1.6.1 Parameter Setting

	#7	#6	#5	#4	#3	#2	#1	#0
3106	OHS			OPH				

[Data type] Bit

OPH The operation history screen is:

0 : Not displayed.

1 : Displayed.

OHS The operation history is:

0 : Sampled.

1 : Not sampled.

3122	Interval at which the clock time is recorded in the operation history

[Data type] Word

[Units of data] Minutes

[Valid data range] 0 to 1439

The clock time is recorded to the operation history at specified intervals. If zero is set as the interval, ten minutes is assumed. The time is recorded only when data is recorded within the corresponding interval.

	#7	#6	#5	#4	#3	#2	#1	#0
3206				PHS				

[Data type] Bit

PHS Setting and display on the operation history signal selection screen and the parameters (No. 12801 through No. 128900) are:

0 : Not linked.

1 : Linked.

12801	Number of a signal symbol table for selecting an operation history signal (01)
12802	Number of a signal symbol table for selecting an operation history signal (02)
12803	Number of a signal symbol table for selecting an operation history signal (03)
12804	Number of a signal symbol table for selecting an operation history signal (04)
12805	Number of a signal symbol table for selecting an operation history signal (05)
12806	Number of a signal symbol table for selecting an operation history signal (06)
12807	Number of a signal symbol table for selecting an operation history signal (07)
12808	Number of a signal symbol table for selecting an operation history signal (08)
12809	Number of a signal symbol table for selecting an operation history signal (09)
12810	Number of a signal symbol table for selecting an operation history signal (10)
12811	Number of a signal symbol table for selecting an operation history signal (11)
12812	Number of a signal symbol table for selecting an operation history signal (12)
12813	Number of a signal symbol table for selecting an operation history signal (13)
12814	Number of a signal symbol table for selecting an operation history signal (14)
12815	Number of a signal symbol table for selecting an operation history signal (15)
12816	Number of a signal symbol table for selecting an operation history signal (16)
12817	Number of a signal symbol table for selecting an operation history signal (17)
12818	Number of a signal symbol table for selecting an operation history signal (18)
12819	Number of a signal symbol table for selecting an operation history signal (19)
12820	Number of a signal symbol table for selecting an operation history signal (20)

[Data type] Byte

[Valid data range] 1 to 10

Set the number of a symbol table including a signal of which operation history is to be recorded for operation history channel (01) to (20) as follows:

1 : G0 to G255
2 : G1000 to G1255
3 : F0 to F255
4 : F1000 to F1255
5 : Y0 to Y127
6 : X0 to X127
9 : G2000 to G2255
10 : F2000 to F2255

12841	Number of a signal selected as an operation history signal (01)
12842	Number of a signal selected as an operation history signal (02)
12843	Number of a signal selected as an operation history signal (03)
12844	Number of a signal selected as an operation history signal (04)
12845	Number of a signal selected as an operation history signal (05)
12846	Number of a signal selected as an operation history signal (06)
12847	Number of a signal selected as an operation history signal (07)
12848	Number of a signal selected as an operation history signal (08)
12849	Number of a signal selected as an operation history signal (09)
12850	Number of a signal selected as an operation history signal (10)
12851	Number of a signal selected as an operation history signal (11)
12852	Number of a signal selected as an operation history signal (12)
12853	Number of a signal selected as an operation history signal (13)
12854	Number of a signal selected as an operation history signal (14)
12855	Number of a signal selected as an operation history signal (15)
12856	Number of a signal selected as an operation history signal (16)
12857	Number of a signal selected as an operation history signal (17)
12858	Number of a signal selected as an operation history signal (18)
12859	Number of a signal selected as an operation history signal (19)
12860	Number of a signal selected as an operation history signal (20)

[Data type] Word

[Valid data range] 0 to 255

Set the number of a signal of which operation history is to be recorded for operation history channel (01) to (20) with a value between 0 and 255.

	#7	#6	#5	#4	#3	#2	#1	#0
12881	RB7	RB6	RB5	RB4	RB3	RB2	RB1	RB0

History record bit settings for an operation history signal (01)

	#7	#6	#5	#4	#3	#2	#1	#0
12882	RB7	RB6	RB5	RB4	RB3	RB2	RB1	RB0

History record bit settings for an operation history signal (02)

	#7	#6	#5	#4	#3	#2	#1	#0
12883	RB7	RB6	RB5	RB4	RB3	RB2	RB1	RB0

History record bit settings for an operation history signal (03)

	#7	#6	#5	#4	#3	#2	#1	#0
12884	RB7	RB6	RB5	RB4	RB3	RB2	RB1	RB0

History record bit settings for an operation history signal (04)

	#7	#6	#5	#4	#3	#2	#1	#0
12885	RB7	RB6	RB5	RB4	RB3	RB2	RB1	RB0

History record bit settings for an operation history signal (05)

	#7	#6	#5	#4	#3	#2	#1	#0
12886	RB7	RB6	RB5	RB4	RB3	RB2	RB1	RB0

History record bit settings for an operation history signal (06)

	#7	#6	#5	#4	#3	#2	#1	#0
12887	RB7	RB6	RB5	RB4	RB3	RB2	RB1	RB0

History record bit settings for an operation history signal (07)

	#7	#6	#5	#4	#3	#2	#1	#0
12888	RB7	RB6	RB5	RB4	RB3	RB2	RB1	RB0

History record bit settings for an operation history signal (08)

	#7	#6	#5	#4	#3	#2	#1	#0
12889	RB7	RB6	RB5	RB4	RB3	RB2	RB1	RB0

History record bit settings for an operation history signal (09)

	#7	#6	#5	#4	#3	#2	#1	#0
12890	RB7	RB6	RB5	RB4	RB3	RB2	RB1	RB0

History record bit settings for an operation history signal (10)

	#7	#6	#5	#4	#3	#2	#1	#0
12891	RB7	RB6	RB5	RB4	RB3	RB2	RB1	RB0

History record bit settings for an operation history signal (11)

	#7	#6	#5	#4	#3	#2	#1	#0
12892	RB7	RB6	RB5	RB4	RB3	RB2	RB1	RB0

History record bit settings for an operation history signal (12)

	#7	#6	#5	#4	#3	#2	#1	#0
12893	RB7	RB6	RB5	RB4	RB3	RB2	RB1	RB0

History record bit settings for an operation history signal (13)

	#7	#6	#5	#4	#3	#2	#1	#0
12894	RB7	RB6	RB5	RB4	RB3	RB2	RB1	RB0

History record bit settings for an operation history signal (14)

	#7	#6	#5	#4	#3	#2	#1	#0
12895	RB7	RB6	RB5	RB4	RB3	RB2	RB1	RB0

History record bit settings for an operation history signal (15)

	#7	#6	#5	#4	#3	#2	#1	#0
12896	RB7	RB6	RB5	RB4	RB3	RB2	RB1	RB0

History record bit settings for an operation history signal (16)

	#7	#6	#5	#4	#3	#2	#1	#0
12897	RB7	RB6	RB5	RB4	RB3	RB2	RB1	RB0

History record bit settings for an operation history signal (17)

	#7	#6	#5	#4	#3	#2	#1	#0
12898	RB7	RB6	RB5	RB4	RB3	RB2	RB1	RB0

History record bit settings for an operation history signal (18)

	#7	#6	#5	#4	#3	#2	#1	#0
12899	RB7	RB6	RB5	RB4	RB3	RB2	RB1	RB0

History record bit settings for an operation history signal (19)

	#7	#6	#5	#4	#3	#2	#1	#0
12900	RB7	RB6	RB5	RB4	RB3	RB2	RB1	RB0

History record bit settings for an operation history signal (20)

[Data type] Bit

RB7 to RB0 For the signal set in channel (01) to (20), of which operation history is to be recorded, the history of each bit is:

0 : Not recorded. (The history of this bit is not recorded.)

1 : Recorded. (The history of this bit is recorded.)

1.6.2 Screen Display

- **Displaying the operation history**

(1) Press the SYSTEM function key.

(2) Press the continue menu key [▷]. The **[OPEHIS]** (OPERATION HISTORY) soft key are displayed.

(3) Press the **[OPEHIS]** soft key twice. The operation history screen is displayed.

```
OPERATION HISTORY                    O1234 N12345
                                       Page : 123
 No. DATA        No. DATA        No. DATA
 01  01/06/03    11  F0000.7↑    21  F0001.0↓
 02  08:40:00    12  F0000.5↑    22  <POS>
 03  <DELETE>    13  F0001.0↑    23  <PROG>
 04  F0000.6↑    14  F0000.5↓    24  <RESET>
 05  MEM         15  P/S0010     25  EDIT
 06  G0009.0↑    16  01/06/03    26  O
 07  G0009.1↑    17  09:27:49    27  1
 08  G0009.2↑    18  <PROG>      28  2
 09  ST↑         19  <RESET>     29  3
 10  ST↓         20  F0000.7↓    30  4

EDIT ****  ***  ***              08:20:52
[  TOP  ][ BOTTOM ][       ][      ][PG.SRH]
```

On the operation history screen, the soft keys are configured as shown below:

⇒ [▷] [PARAM] [DGNOS] [PMC] [SYSTEM] [(OPE)] [▷]
⇓push
[◁] [W.DGNS] [ ] [ ] [OPEHIS] [(OPE)] [▷]
⇓ push
[◁] [OPEHIS] [SG–SEL] [ ] [ ] [(OPE)] [▷]
⇓push
[◁] [TOP] [BOTTOM] [ ] [ ] [PG.SRH] [▷]

(4) To display the next part of the operation history, press the page down key PAGE ⇓. The next page is displayed.

To display the interface between two pages, press cursor key → or ←. The screen is scrolled by one row. On a 14–inch CRT screen, pressing the cursor key scrolls the screen by half a page.

These soft keys can also be used:

1) Pressing the **[TOP]** soft key displays the first page (oldest data).
2) Pressing the **[BOTTOM]** soft key displays the last page (latest data).
3) Pressing the **[PG.SRH]** soft key displays a specified page.

Example) By entering 50 then pressing the **[PG.SRH]** key, page 50 is displayed.

Data displayed on the operation history screen

(1) MDI keys

Address and numeric keys are displayed after a single space.
Soft keys are displayed in square brackets ([]).
Other keys (RESET/INPUT, for example) are displayed in angle brackets (<>).
A key pressed at power–on is displayed in reverse video.
For two–path control, the operations of path 2 are displayed in the same way, but preceded by S_.

1) Function key: <POS>, <PROG>, <OFFSET>, etc.
2) Address/numeric key: A to Z, 0 to 9, ; (EOB), +, –, (, etc.
3) Page/cursor key: <PAGE↑>, <CUR↓>, <CUR←–>
4) Soft key: [SF1], [SF2], etc.
5) Other key: <RESET>, <CAN>, etc.
6) Key pressed at power–on: <RESET>

(2) Input and output signals

General signals are displayed in the following format:

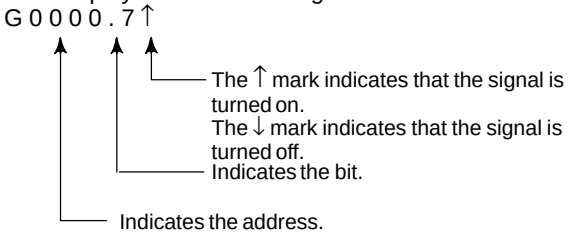

Some signals are indicated by their symbol names.

SBK ↑ (Indicates that the single block switch is turned on.)

Mode selection signals and rapid traverse override signals are displayed as indicated below:

Input signal					Name displayed
MD1	ND2	MD4	REF	DNC1	
0	0	0	0	0	MDI
1	0	0	0	0	MEM
1	0	0	0	1	RMT
0	1	0	0	0	NOMODE
1	1	0	0	0	EDT
0	0	1	0	0	H/INC
1	0	1	0	0	JOG
1	0	1	1	0	REF
0	1	1	0	0	TJOG
1	1	1	0	0	THND

Input signal		Name displayed
ROV1	ROV2	
0	0	R100%
1	0	R50%
0	1	R25%
1	1	RF0%

(3) NC alarms

NC alarms are displayed in reverse video.
P/S alarms, system alarms, and external alarms are displayed together with their numbers.
For other types of alarms, only the alarm type is displayed. (No details are displayed.)
For two–path control, the operations of path 2 are displayed in the same way, but preceded by S_.

Example) P/S0050, SV_ALM, S_APC_ALM

(4) Time stamp (date and time)

The following time data (date and time) is recorded:

1) Date and time of power–on
2) Date and time of power–off
3) Date and time when an NC alarm occurs
4) The clock time is recorded at predetermined intervals, together with each new calendar day.

1) The power–on time is displayed as shown below:
   01/01/20 ==== Year/Month/Day
   09:15:30 ==== Hour:Minute:Second
2) The power–off time and the time when an NC alarm occurred are displayed in reverse video.
   01/01/20 ==== Year/Month/Day
   09:15:30 ==== Hour:Minute:Second
   If a system alarm occurs, the date and time are not recorded.
3) At predetermined intervals, the clock time is displayed in reverse video. Set the interval in minutes in parameter No. 3122. If zero is set, the time is stamped at ten–minute intervals.
   09:15:30 ==== Hour:Minute:Second
   Each new calendar day is displayed in reverse video.
   01/01/20 ==== Year/Month/Day

CAUTION
1 The clock time is recorded for a specified interval only when data is stored within that interval.
2 If a system alarm is issued, the system alarm occurrence time is used for power–off display.

- **Input signal or output signal to be recorded in the operation history**

(1) P ress the [SYSTEM] function key.

(2) Press the continuous menu key [▷]. The **[OPEHIS]** (operation history) soft key is displayed.

(3) Press the **[OPEHIS]** soft key, then press the **[SG–SEL]** soft key. The operation history signal selection screen is displayed.

```
OP_HIS SIGNAL SELECT                O1000 N02000

 No.  ADDRES  SIGNAL    No.  ADDRES  SIGNAL
 01   X0000   00001000  11   G0000   00000001
 02   X0004   10000000  12   G0004   00000011
 03   X0008   00001100  13   G0008   00000111
 04   X0009   00111000  14   G0003   00001111
 05   X0012   00001111  15   G0043   01100000
 06   Y0000   01000000  16           ********
 07   Y0004   00110000  17           ********
 08   Y0007   00011100  18           ********
 09   Y0008   00011100  19           ********
 10   Y0010   00011100  20           ********
 >
   EDIT  **** *** * * *   00:00:00
[OPEHIS] [SG-SEL] [      ] [      ] [ (OPE) ]
```

1.6.3 Setting The Input Signal or Output Signal to Be Recorded in The Operation History

(1) On the operation history signal selection screen, press the **[(OPE)]** soft key.

```
OP_HIS SIGNAL SELECT              O1000 N02000

 No.  ADDRES SIGNAL    No.  ADDRES SIGNAL
 01   G0004  00000010  11          ********
 02          ********  12          ********
 03          ********  13          ********
 04          ********  14          ********
 05          ********  15          ********
 06          ********  16          ********
 07          ********  17          ********
 08          ********  18          ********
 09          ********  19          ********
 10          ********  20          ********
 >
   EDIT **** *** *** *** 00:00:00
[ ALLDEL ][ DELETE ][ ON:1 ][ OFF:0 ][       ]
```

(2) Press the cursor key ↑ or ↓ to position the cursor to a desired position.

(3) Key in a signal type (X, G, F, or Y) and an address, then press the INPUT key.

Example) G0004 INPUT

Signal address G0004 is set in the ADDRES column. The corresponding position in the SIGNAL column is initialized to 000000000.

(4) Select the bit to be recorded.

To select all bits of the specified signal address, press the **[ON:1]** soft key while the cursor is positioned to 00000000 .

To select a particular bit, position the cursor to that bit by pressing the cursor key ← or →, then press the **[ON:1]** soft key. To cancel a selection made by pressing the **[ON:1]** soft key or to cancel a previously selected signal, press the **[OFF:0]** soft key.

(5) Up to 20 addresses can be specified by means of this signal selection. These addresses need not always be specified at consecutive positions, starting from No.1.

(6) Pressing the **[ALLDEL]** and **[EXEC]** soft keys deletes all data. If the **[ALLDEL]** key is pressed by mistake, it can be cancelled by pressing the **[CAN]** key.

(7) To delete a selected signal address, position the cursor to the corresponding position then press the **[DELETE]** and **[EXEC]** soft keys. In the SIGNAL column, asterisks ******** are displayed in place of the deleted data. In the ADDRES column, the corresponding position is cleared.

If the **[DELET]** key is pressed by mistake, it can be cancelled by pressing the **[CAN]** key.

(8) Pressing the return menu key [◁] causes the **[OPEHIS]** (OPE) soft key to be displayed again.

- **Parameter–based setting**

By setting bit 4 (PHS) of parameter No. 3206, setting and display on the operation history signal selection screen can be linked with parameter No. 12801 through No. 12900. By this linking, setting information related to input and output signals subject to operation history processing can be input and output in the same way as ordinary parameters.

- **Input signals and output signals to be recorded in the history**

NOTE
1 A cross (×) indicates that a signal will not be recorded. Also, any signal for which an address is not specified will not be recorded, either.
2 A circle (○) indicates that a signal can be recorded.
3 A signal indicated by its symbol name will also be displayed by its symbol name.

1. M/T addresses

MT→PMC

	#7	#6	#5	#4	#3	#2	#1	#0
X000	○	○	○	○	○	○	○	○
to								
X127	○	○	○	○	○	○	○	○

PMC→CNC

	#7	#6	#5	#4	#3	#2	#1	#0
G000	○	○	○	○	○	○	○	○
to								
G003	○	○	○	○	○	○	○	○
G004	○	○	○	○	FIN	○	○	○
G005	○	○	○	○	TFIN	SFIN	○	MFIN
G006	○	○	○	○	○	*ABS	○	SRN
G007	RLSOT	EXLM	*FLUP	○	○	ST	STLK	○
G008	ERS	RRW	*SP	*ESP	○	○	○	*IT
G009	○	○	○	○	○	○	○	○
to								
G013	○	○	○	○	○	○	○	○
G014	○	○	○	○	○	○	○	○
G015	○	○	○	○	○	○	○	○
to								
G018	○	○	○	○	○	○	○	○
G019	RT	○	○	○	○	○	○	○

	#7	#6	#5	#4	#3	#2	#1	#0
G020	○	○	○	○	○	○	○	○
to								
G042	○	○	○	○	○	○	○	○
G043	○	×	○	×	×	○	○	○
G044	○	○	○	○	○	○	MLK	BDT1
G045	BDT9	BDT8	BDT7	BDT6	BDT5	BDT4	BDT3	BDT2
G046	DRN	KEY4	KEY3	KEY2	KEY1	○	SBK	○
G047	○	○	○	○	○	○	○	○
to								
G060	○	○	○	○	○	○	○	○
G061	○	○	○	○	○	○	○	RGTA
G062	○	○	○	○	○	○	○	○
to								
G099	○	○	○	○	○	○	○	○
G100	+J8	+J7	+J6	+J5	+J4	+J3	+J2	+J1
G101	○	○	○	○	○	○	○	○
G102	–J8	–J7	–J6	–J5	–J4	–J3	–J2	–J1
G103	○	○	○	○	○	○	○	○
to								
G105	○	○	○	○	○	○	○	○
G106	MI8	MI7	MI6	MI5	MI4	MI3	MI2	MI1
G107	○	○	○	○	○	○	○	○
G108	MLK8	MLK7	MLK6	MLK5	MLK4	MLK3	MLK2	MLK1
G109	○	○	○	○	○	○	○	○
G110	+LM8	+LM7	+LM6	+LM5	+LM4	+LM3	+LM2	+LM1
G111	○	○	○	○	○	○	○	○
G112	–LM8	–LM7	–LM6	–LM5	–LM4	–LM3	–LM2	–LM1
G113	○	○	○	○	○	○	○	○
G114	*+L8	*+L7	*+L6	*+L5	*+L4	*+L3	*+L2	*+L1

	#7	#6	#5	#4	#3	#2	#1	#0
G115	○	○	○	○	○	○	○	○
G116	*–L8	*–L7	*–L6	*–L5	*–L4	*–L3	*–L2	*–L1
G117	○	○	○	○	○	○	○	○
G118	*+ED8	*+ED7	*+ED6	*+ED5	*+ED4	*+ED3	*+ED2	*+ED1
G119	○	○	○	○	○	○	○	○
G120	*–ED8	*–ED7	*–ED6	*–ED5	*–ED4	*–ED3	*–ED2	*–ED1
G121	○	○	○	○	○	○	○	○
to								
G125	○	○	○	○	○	○	○	○
G126	SVF8	SVF7	SVF6	SVF5	SVF4	SVF3	SVF2	SVF1
G127	○	○	○	○	○	○	○	○
to								
G129	○	○	○	○	○	○	○	○
G130	*IT8	*IT7	*IT6	*IT5	*IT4	*IT3	*IT2	*IT1
G131	○	○	○	○	○	○	○	○
G132	○	○	○	○	+MIT4	+MIT3	+MIT2	+MIT1
G133	○	○	○	○	○	○	○	○
G134	○	○	○	○	–MIT4	–MIT3	–MIT2	–MIT1
G135	○	○	○	○	○	○	○	○
to								
G255	○	○	○	○	○	○	○	○

PMC→MT

	#7	#6	#5	#4	#3	#2	#1	#0
Y000	○	○	○	○	○	○	○	○
to								
Y127	○	○	○	○	○	○	○	○

CNC→PMC

	#7	#6	#5	#4	#3	#2	#1	#0
F000	○	○	○	○	○	○	○	○
to								
F255	○	○	○	○	○	○	○	○

2. List of Address for 2–path control

MT→PMC

	#7	#6	#5	#4	#3	#2	#1	#0
X000	○	○	○	○	○	○	○	○
to								
X127	○	○	○	○	○	○	○	○

PMC→CNC (Signals for tool post 1)

	#7	#6	#5	#4	#3	#2	#1	#0
G000	○	○	○	○	○	○	○	○
to								
G003	○	○	○	○	○	○	○	○
G004	○	○	○	○	FIN	○	○	○
G005	○	○	○	○	TFIN	SFIN	○	MFIN
G006	○	○	○	○	○	*ABS	○	SRN
G007	RLSOT	EXLM	*FLUP	○	○	ST	STLK	○
G008	ERS	RRW	*SP	*ESP	○	○	○	*IT
G009	○	○	○	○	○	○	○	○
to								
G013	○	○	○	○	○	○	○	○
G014	○	○	○	○	○	○	○	○
G015	○	○	○	○	○	○	○	○
to								
G018	○	○	○	○	○	○	○	○
G019	RT	○	○	○	○	○	○	○
G020	○	○	○	○	○	○	○	○
to								
G042	○	○	○	○	○	○	○	○
G043	○	×	○	×	×	○	○	○
G044	○	○	○	○	○	○	MLK	BDT1
G045	BDT9	BDT8	BDT7	BDT6	BDT5	BDT4	BDT3	BDT2
G046	DRN	KEY4	KEY3	KEY2	KEY1	○	SBK	○
G047	○	○	○	○	○	○	○	○
to								
G060	○	○	○	○	○	○	○	○

	#7	#6	#5	#4	#3	#2	#1	#0
G061	○	○	○	○	○	○	○	RGTA
G062	○	○	○	○	○	○	○	○
to								
G099	○	○	○	○	○	○	○	○
G100	+J8	+J7	+J6	+J5	+J4	+J3	+J2	+J1
G101	○	○	○	○	○	○	○	○
G102	–J8	–J7	–J6	–J5	–J4	–J3	–J2	–J1
G103	○	○	○	○	○	○	○	○
to								
G105	○	○	○	○	○	○	○	○
G106	MI8	MI7	MI6	MI5	MI4	MI3	MI2	SMI1
G107	○	○	○	○	○	○	○	○
G108	MLK8	MLK7	MLK6	MLK5	MLK4	MLK3	MLK2	MLK1
G109	○	○	○	○	○	○	○	○
G110	+LM8	+LM7	+LM6	+LM5	+LM4	+LM3	+LM2	+LM1
G111	○	○	○	○	○	○	○	○
G112	–LM8	–LM7	–LM6	–LM5	–LM4	–LM3	–LM2	–LM1
G113	○	○	○	○	○	○	○	○
G114	*+L8	*+L7	*+L6	*+L5	*+L4	*+L3	*+L2	*+L1
G115	○	○	○	○	○	○	○	○
G116	*–L8	*–L7	*–L6	*–L5	*–L4	*–L3	*–L2	*–L1
G117	○	○	○	○	○	○	○	○
G118	*+ED8	*+ED7	*+ED6	*+ED5	*+ED4	*+ED3	*+ED2	*+ED1
G119	○	○	○	○	○	○	○	○
G120	*–ED8	*–ED7	*–ED6	*–ED5	*–ED4	*–ED3	*–ED2	*–ED1
G121	○	○	○	○	○	○	○	○
to								
G125	○	○	○	○	○	○	○	○

	#7	#6	#5	#4	#3	#2	#1	#0
G126	SVF8	SVF7	SVF6	SVF5	SVF4	SVF3	SVF2	SVF1
G127	○	○	○	○	○	○	○	○
to								
G129	○	○	○	○	○	○	○	○
G130	*IT8	*IT7	*IT6	*IT5	*IT4	*IT3	*IT2	*IT1
G131	○	○	○	○	○	○	○	○
G132	○	○	○	○	+MIT4	+MIT3	+MIT2	+MIT1
G133	○	○	○	○	○	○	○	○
G134	○	○	○	○	–MIT4	–MIT3	–MIT2	–MIT1
G135	○	○	○	○	○	○	○	○
to								
G255	○	○	○	○	○	○	○	○

PMC→CNC (Signals for the 2–path)

	#7	#6	#5	#4	#3	#2	#1	#0
G1000	○	○	○	○	○	○	○	○
to								
G1003	○	○	○	○	○	○	○	○
G1004	○	○	○	○	FIN	○	○	○
G1005	○	○	○	○	TFIN	SFIN	○	MFIN
G1006	○	○	○	○	○	*ABS	○	SRN
G1007	RLSOT	EXLM	*FLUP	○	○	ST	STLK	○
G1008	ERS	RRW	*SP	*ESP	○	○	○	*IT
G1009	○	○	○	○	○	○	○	○
to								
G1013	○	○	○	○	○	○	○	○
G1014	○	○	○	○	○	○	○	○
G1015	○	○	○	○	○	○	○	○
to								
G1018	○	○	○	○	○	○	○	○
G1019	RT	○	○	○	○	○	○	○

	#7	#6	#5	#4	#3	#2	#1	#0
G1020	○	○	○	○	○	○	○	○
to								
G1042	○	○	○	○	○	○	○	○
G1043	○	×	○	×	×	○	○	○
G1044	○	○	○	○	○	○	MLK	BDT1
G1045	BDT9	BDT8	BDT7	BDT6	BDT5	BDT4	BDT3	BDT2
G1046	DRN	KEY4	KEY3	KEY2	KEY1	○	SBK	○
G1047	○	○	○	○	○	○	○	○
to								
G1060	○	○	○	○	○	○	○	○
G1061	○	○	○	○	○	○	○	RGTA
G1062	○	○	○	○	○	○	○	○
to								
G1099	○	○	○	○	○	○	○	○
G1100	+J8	+J7	+J6	+J5	+J4	+J3	+J2	+J1
G1101	○	○	○	○	○	○	○	○
G1102	–J8	–J7	–J6	–J5	–J4	–J3	–J2	–J1
G1103	○	○	○	○	○	○	○	○
to								
G1105	○	○	○	○	○	○	○	○
G1106	MI8	MI7	MI6	MI5	MI4	MI3	MI2	SMI1
G1107	○	○	○	○	○	○	○	○
G1108	MLK8	MLK7	MLK6	MLK5	MLK4	MLK3	MLK2	MLK1
G1109	○	○	○	○	○	○	○	○
G1110	+LM8	+LM7	+LM6	+LM5	+LM4	+LM3	+LM2	+LM1
G1111	○	○	○	○	○	○	○	○
G1112	–LM8	–LM7	–LM6	–LM5	–LM4	–LM3	–LM2	–LM1
G1113	○	○	○	○	○	○	○	○
G1114	*+L8	*+L7	*+L6	*+L5	*+L4	*+L3	*+L2	*+L1
G1115	○	○	○	○	○	○	○	○

	#7	#6	#5	#4	#3	#2	#1	#0
G1116	*–L8	*–L7	*–L6	*–L5	*–L4	*–L3	*–L2	*–L1
G1117	○	○	○	○	○	○	○	○
G1118	*+ED8	*+ED7	*+ED6	*+ED5	*+ED4	*+ED3	*+ED2	*+ED1
G1119	○	○	○	○	○	○	○	○
G1120	*–ED8	*–ED7	*–ED6	*–ED5	*–ED4	*–ED3	*–ED2	*–ED1
G1121	○	○	○	○	○	○	○	○
to								
G1125	○	○	○	○	○	○	○	○
G1126	SVF8	SVF7	SVF6	SVF5	SVF4	SVF3	SVF2	SVF1
G1127	○	○	○	○	○	○	○	○
to								
G1129	○	○	○	○	○	○	○	○
G1130	*IT8	*IT7	*IT6	*IT5	*IT4	*IT3	*IT2	*IT1
G1131	○	○	○	○	○	○	○	○
G1132	○	○	○	○	+MIT4	+MIT3	+MIT2	+MIT1
G1133	○	○	○	○	○	○	○	○
G1134	○	○	○	○	–MIT4	–MIT3	–MIT2	–MIT1
G1135	○	○	○	○	○	○	○	○
to								
G1255	○	○	○	○	○	○	○	○

PMC→MT

	#7	#6	#5	#4	#3	#2	#1	#0
Y000	○	○	○	○	○	○	○	○
to								
Y127	○	○	○	○	○	○	○	○

CNC→PMC (Signals for the 1–path)

	#7	#6	#5	#4	#3	#2	#1	#0
F000	○	○	○	○	○	○	○	○
to								
F255	○	○	○	○	○	○	○	○

CNC→PMC (Signals for the 2–path)

	#7	#6	#5	#4	#3	#2	#1	#0
F1000	○	○	○	○	○	○	○	○
to								
F1255	○	○	○	○	○	○	○	○

1.6.4 Inputting and Outputting the Operation History Data

Recorded data can be output to an input/output unit connected via a reader/punch interface. An output record can be input from the input/output unit.
Set the input/output unit to be used in setting parameters No. 0020 and 0100 to 0135.
To output the data, set a code in the ISO bit of a setting parameter (bit 1 of parameter No. 0020).

- **Output**

(1) Select EDIT mode.

(2) Press the [SYSTEM] key, then select the operation history display screen.

(3) Press the soft keys **[(OPRT)]**, [▷], **[PUNCH]**, and **[EXEC]** in this order.

The data output to the FANUC Floppy Cassette or FANUC FA Card is stored under file name OPERATION HISTORY.

- **Input**

(1) Select EDIT mode.

(2) Press the [SYSTEM] key, then select the operation history display screen.

(3) Press the soft keys **[(OPRT)]**, [▷], **[READ]**, and **[EXEC]** in this order.

- **Output data format**

1. MDI/soft key
2. Signal
3. Alarm
4. For extension (date or time)
5. MDI/soft key of path 2
6. Signal of path 2
7. Alarm of path 2

The header and recorded operation data are output, in this order. The operation history data is divided into four parts by identifier words. Data other than the identifier words depends on the type.

T(identifier word)

T0	:	Header
T50	:	MDI/soft key
T51	:	Signal
T52	:	Alarm
T53	:	For extension (date or time)
T54	:	MDI/soft key of path 2
T55	:	Signal of path 2
T56	:	Alarm of path 2

1) Header

T	0	C	O	P	E	R	A	T	I	O	N	

		H	I	S	T	O	R	Y	;	

C: Data word

2) MDI/soft key

T	5	0	P	0 to 1	H	*	*	;	

P0: Usually
P1: At power–on
H **: Key code (See the following table.)

3) Signal

T	5	1	P	0 to 6	N	0 to 255	H	*	*	,	*	*	;	

New data Old data

P0: X0000 and above
P2: G0000 and above
P4: Y0000 and above
P6: F0000 and above
N***: DI/DO number
H **: Signal information data (hexadecimal)

4) Alarm

T	5	2	P	0 to 10	N	*	*	*	*	;

P0: P/S No. 100
P1: P/S No. 000
P2: P/S No. 101
P3: P/S No. 0001 to 254
P4: Overtravel alarm
P5: Overheat alarm
P6: Servo alarm
P7: System alarm
P8: APC alarm
P9: Spindle alarm
P10: P/S alarm No. 5000 to 5999
P15: External alarm
N****: Alarm number (for P/S alarm, system alarm, and external alarm only)

5) For extension (date or time)

Date

T	5	3	P	0 to 1	E	0	D	*	*	*	*	*	*	*	*	;

Time

T	5	3	P	0 to 1	E	1	D	*	*	*	*	*	*	;

P0: Usually
P1: At power–on
E0: Date
E1: Time
D*..*: Data Example) June 29, 2001

D	2	0	0	1	0	6	2	9

6) MDI/soft key of path 2

T	5	4	P	0 to 1	H	*	*	;

P0: Usually
P1: At power–on
H **: KCB code (See the following table.)

7) Signal of path 2

T	5	5	P	2, 6	N	1000 to 1255		H	*	*	,	*	*	;

New data Old data

P2: G1000 and above
P6: F1000 and above
N***: DI/DO number
H **: Signal information data (hexadecimal)

8) Alarm of path 2

T	5	6	P	0 to 10	N	*	*	*	*	;

P0: P/S No. 100
P1: P/S No. 000
P2: P/S No. 101
P3: P/S No. 001 to 254
P4: Overtravel alarm
P5: Overheat alarm
P6: Servo alarm
P7: System alarm
P8: APC alarm
P9: Spindle alarm
P10: P/S alarm No. 5000 to 5999
P15: External alarm
N****: Alarm number (for P/S alarm, system alarm, and external alarm only)

Key codes (MDI/soft key)
(00H to 7FH)

	0	1	2	3	4	5	6	7
0			Space	0	@	P		
1			!	1	A	Q		
2			”	2	B	R		
3			#	3	C	S		
4			$	4	D	T		
5			%	5	E	U		
6			&	6	F	V		
7			’	7	G	W		
8			(	8	H	X		
9			)	9	I	Y		
A	; (EOB)		*	:	J	Z		
B			+		K	[		
C			’	<	L	¥		
D			–	=	M	]		
E			.	>	N			
F			/	?	O	–		

(80H to FFH)

	8	9	A	B	C	D	E	F
0		Reset *						F0 *
1		MMC *						F1 *
2		CNC *						F2 *
3								F3 *
4	Shift	Insert *						F4 *
5		Delete *						F5 *
6	CAN	Alter *						F6 *
7								F7 *
8	Cur→ *	Input *					POS *	F8 *
9	Cur← *						PROG *	F9 *
A	Cur↓ *	Help *					OFFSET SETTING *	
B	Cur↑ *						SYSTEM *	
C							MESSAGE *	
D							CUSTOM GRAPH *1*	
E	Page↓ *						CUSTOM *	FR *
F	Page↑ *						Fapt *	FL *

*1:On the small–sized keypad, ED corresponds to the CUSTOM GRAPH key. On a standard keyboard, ED corresponds to the GRAPH key and EE to the CUSTOM key.

* : Command key

1.6.5 Notes

(1) While the operation history screen is displayed, no information can be recorded to the history.

(2) An input signal having an on/off width of up to 16 msec is not recorded in the history. Some signals are not recorded in the history.

(3) Once the storage becomes full, old data is deleted, starting from the oldest record. Up to about 8000 key information items can be recorded.

(4) The recorded data is retained even after the power is turned off. A memory all clear operation, however, erases the recorded data.

(5) The operation history function cannot execute sampling when the OHS bit (bit 7 of parameter No. 3106) is set to 1.

(6) Set the date and time on the setting screen.

(7) The time needed to input and output 6000 operation records at a rate of 4800 baud is as follows:

Output: About 5 minutes
Input: About 2 minutes and 30 seconds

This file corresponds to a paper tape of about 180 m in length.

1.7 HELP FUNCTION

1.7.1 General

The help function displays alarm information, operation method and a table of contents for parameters. This function is used as a handbook.

1.7.2 Display Method

Press HELP key on any screen other than PMC screen, then a help screen appears.
(However, it is not available when PMC screen/CUSTOM screen is displaying)

- **Display of help screen**

```
HELP (INITIAL MENU)              O1234 N12345

             *****   HELP   *****
           1. ALARM DETAIL
           2. OPERATION METHOD
           3. PARAMETER TABLE









[ALARM]  [OPERAT]  [PARAM]  [     ]  [     ]
```

- **Help for alarm**

(1) When an alarm is generated, press soft key **[ALARM]**, then a help message of the alarm is displayed.

```
HELP (INITIAL MENU)              O1234 N12345

NUMBER     : 010
M'SAGE  : IMPROPER G CODE
FUNCTION  :
ALARM  :
  A G CODE NOT LISTED IN G-CODE TABLE
  IS BEING COMMANDED
  ALSO G-CODE FOR FUNCTION NOT ADDED
  IS BEING COMMANDED




[ALARM]  [OPERAT]  [PARAM] [     ] [ (OPRT) ]
```

(2) Pressing soft key **[OPERAT]**,(alarm No.), and soft key **[SELECT]** in this order, a help message corresponding to the input alarm number is displayed.

- **Help for operation**

(1) Press **[2 OPR]**, then a menu for operation method is displayed.

```
HELP (OPERATION METHOD)            O1234 N12345

1. PROGRAM EDIT
2. SEARCH
3. RESET
4. DATA INPUT WITH MDI
5. DATA INPUT WITH TAPE
6. OUTPUT
7. INPUT WITH FANUC CASSETTE
8. OUTPUT WITH FANUC CASSETTE
9. MEMORY CLEAR




[ALARM]  [OPRERAT]  [PARAM] [     ]  [(OPRT)]
```

(2) Press **[OPERAT]**, (an item number) and soft key **[SELECT]**, then an operation method of the item is displayed.

Pressing PAGE key ↑PAGE or PAGE↓ displays another pages.

```
HELP (OPERATION METHOD)            O1234 N12345
<<1.PROGRAM EDIT>>                      1/4  ← Current page/ Total page
DELETE ALL PROGRAMS
  MODE :EDIT
  SCREEN:PROGRAM
  OPR  :(0-9999) - (DELETE)

DELETE ONE PROGRAM
  MODE : EDIT
  SCREEN: PROGRAM
  OPR  :(0+PROGRAM NUMBER) - <DELETE>




[    ]  [    ]  [    ]  [    ]  [SELECT]
```

- **Parameter table**

Press soft key **[PARAM]**, then a parameter table is displayed.

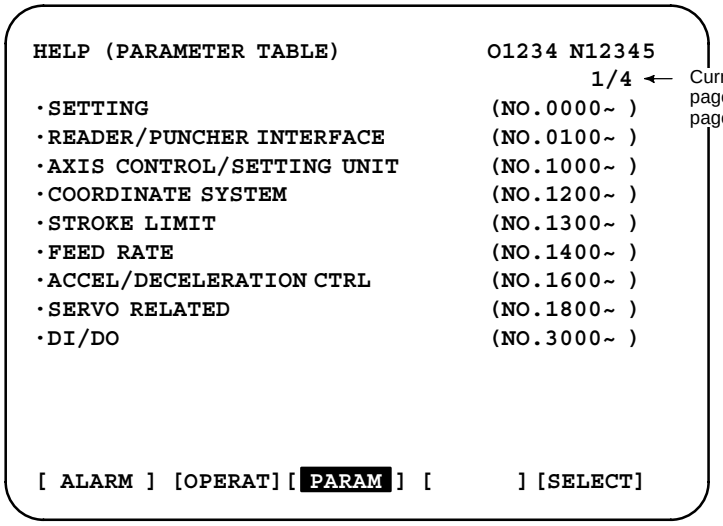

Another screen can be selected by the PAGE key or .

1.8 DISPLAYING DIAGNOSTIC PAGE

1.8.1 Displaying Diagnostic Page

(1) Press SYSTEM key.

(2) Press soft key **[DGNOS]**, then a diagnostic screen is displayed.

1.8.2 Contents Displayed

- **Causes when the machine does not travel in spite of giving a command**

000 WAITING FOR FIN SIGNAL	An auxiliary function is being executed.
001 MOTION	Travel command of cycle operation is being executed.
002 DWELL	DWELL Dwell is being executed.
003 IN–POSITION CHECK	In–position check is being done.
004 FEEDRATE OVERRIDE 0%	Feedrate override is 0%.
005 INTERLOCK/START LOCK	Interlock or start lock is input.
006 SPINDLE SPEED ARRIVAL CHECK	Waiting for spindle speed arrival signal.
010 PUNCHING	Data is being output through reader/puncher interface.
011 READING	Data is being input through reader/puncher interface.
012 WAITING FOR (UN) CLAMP	Waiting for the end of index table indexing
013 JOG FEEDRATE OVERRIDE 0%	Manual feedrate override is 0%.
014 WAITING FOR RESET, ESP,RRW OFF	NC is in reset state.
015 EXTERNAL PROGRAM NUMBER SEARCH	External Program Number Search External program number search is being done
016 BACKGROUND ACTIVE	Background is being used.

- **Cause of the cycle start LED turned off**

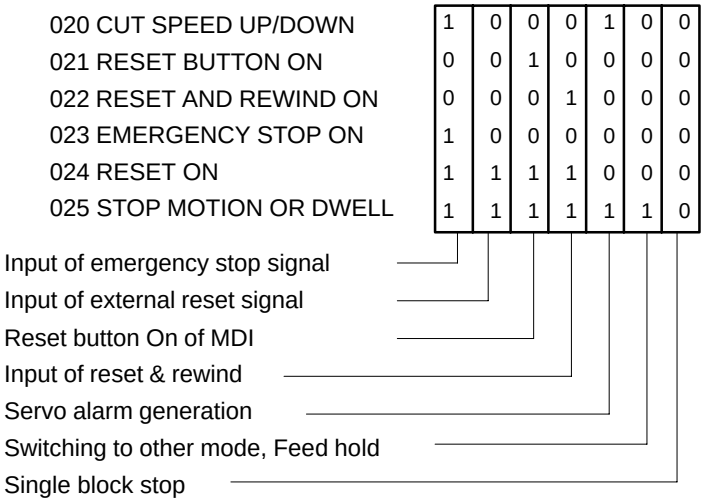

- **State of TH alarm**

030 CHARACTER NUMBER TH ALARM
Position of the character that caused TH alarm. The position is counted from the head.

031 TH DATA
Data of the character that caused TH alarm.

- **Screen hard copy status**

		#7	#6	#5	#4	#3	#2	#1	#0
DGN	035				ER3	ER2	ER1	ABT	END

END: Screen hard copy was completed normally.

ABT: Screen hard copy was discontinued.

ER1: An invalid parameter value was specified for screen hard copy.

ER2: An attempt to use a memory card for screen hard copy failed.

ER3: An error occurred during writing to a memory card for screen hard copy.

- **C executor status**

DGN	045	C executor status

[Data type] Byte

[Valid data range] 0 to 255

C executor status

0:	Normal.
2:	Inoperable because of an incorrect FROM content.
3:	Inoperable because the power was switched on with the M and 0 keys held down.
5:	Inoperable because of insufficient SRAM area; increase the SRAM area size. Alternatively, inoperable because of an incorrect C executor library version; use a new C executor library.
6:	Inoperable because of an internal error.
7:	Inoperable because of an internal error.
9:	Inoperable because of an internal error.
10:	Inoperable because of an incorrect C executor library version; use a new C executor library.
11:	Inoperable because of an incorrect FROM content.
12:	Inoperable because of an internal error.

- **Details of serial pulse coder**

		#7	#6	#5	#4	#3	#2	#1	#0
DGN	200	OVL	LV	OVC	HCA	HVA	DCA	FBA	OFA

#7(OVL): Overload alarm

#6(LV): Insufficient voltage alarm

#5(OVC): Over current alarm

#4(HCA): Abnormal current alarm

#3(HVA): Overvoltage alarm

#2(DCA): Discharge alarm

#1(FBA): Disconnection alarm

#0(OFA): Overflow alarm

		#7	#6	#5	#4	#3	#2	#1	#0
DGN	201	ALD			EXP				

Overload alarm	0	–	–	–	Motor overheat
	1	–	–	–	Amplifier overheat
Disconnection alarm	1	–	–	0	Built–in pulse coder (hand)
	1	–	–	1	Disconnection of separated type pulse coder (hard)
	0	–	–	0	Disconnection of pulse coder (software)

		#7	#6	#5	#4	#3	#2	#1	#0
DGN	202		CSA	BLA	PHA	RCA	BZA	CKA	SPH

#6(CSA): Hardware of serial pulse coder is abnormal

#5(BLA): Battery voltage is low (warning)

#4(PHA): Serial pulse coder or feedback cable is erroneous.

#3(RCA): Serial pulse coder is faulty.
Counting of feedback cable is erroneous.

#2(BZA): Battery voltage became 0.
Replace the battery and set the reference position.

#1(CKA): Serial pulse coder is faulty.
Internal block stopped.

#0(SPH): Serial pulse coder or feedback cable is faulty.
Counting of feedback cable is erroneous.

		#7	#6	#5	#4	#3	#2	#1	#0
DGN	203	DTE	CRC	STB	PRM				

#7(DTE): Communication failure of serial pulse coder.
There is no response for communication.

#6(CRC): Communication failure of serial pulse coder.
Transferred data is erroneous.

#5(STB): Communication failure of serial pulse coder.
Transferred data is erroneous.

#4(PRM): The alarm is detected by the servo, the values specified in the parameter is not correct.

		#7	#6	#5	#4	#3	#2	#1	#0
DGN	204		OFS	MCC	LDA	PMS			

#6(OFS): Abnormal current value result of A/D conversion of digital

#5(MCC): Contacts of MCC of servo amplifier is melted.

#4(LDA): Serial pulse coder LED is abnormal

#3(PMS): Feedback is not correct due to faulty serial pulse coder C or feedback cable.

- **Details of separate serial pulse coder alarms**

		#7	#6	#5	#4	#3	#2	#1	#0
DGN	205	OHA	LDA	BLA	PHA	CMA	BZA	PMA	SPH

#7(OHA): Overheat occurred in the separate pulse coder.

#6(LDA): An LED error occurred in the separate pulse coder.

#5(BLA): A low battery voltage occurred in the separate pulse coder.

#4(PHA): A phase data error occurred in the separate linear scale.

#3(CMA): A count error occurred in the separate pulse coder.

#2(BZA): The battery voltage for the separate pulse coder is zero.

#1(PMA): A pulse error occurred in the separate pulse coder.

#0(SPH): A soft phase data error occurred in the separate pulse coder.

		#7	#6	#5	#4	#3	#2	#1	#0
DGN	206	DTE	CRC	STB					

#7(DTE): A data error occurred in the separate pulse coder.

#6(CRC): A CRC error occurred in the separate pulse coder.

#5(STB): A stop bit error occurred in the separate pulse coder.

- **Details of invalid servo parameter alarms (on the CNC side)**

This data indicates the cause of servo alarm No. 417, detected by the NC. If the alarm is detected by the servo, the PRM bit (bit 4 of DGN No. 0203) is set to 1.

		#7	#6	#5	#4	#3	#2	#1	#0
DGN	280		AXS		DIR	PLS	PLC		MOT

#0(MOT): The motor type specified in parameter No. 2020 falls outside the predetermined range.

#2(PLC): The number of velocity feedback pulses per motor revolution, specified in parameter No. 2023, is zero or less. The value is invalid.

#3(PLS): The number of position feedback pulses per motor revolution, specified in parameter No. 2024, is zero or less. The value is invalid.

#4(DIR): The wrong direction of rotation for the motor is specified in parameter No. 2022 (the value is other than 111 or –111).

#6(AXS): In parameter No. 1023 (servo axis number), a value that falls outside the range of 1 to the number of controlled axes is specified. (For example, 4 is specified instead of 3.) Alternatively, the values specified in the parameter are not consecutive.

- **Position error amount**

DGN	300	Position error of an axis in detection unit

$$\text{Position error} = \frac{\text{Feed rate [mm/min]}}{60 \times \text{servo loop gain [1/sec]}} \times \frac{1}{\text{Detection unit}}$$

- **Machine position**

DGN	301	Distance from reference position of an axis in detection unit

- **Reference position shift function**

DGN | 302 | Distance from the end of the deceleration dog to the first grid point

[Data type] Two–word axis

[Units of data] 0.001 mm (metric output), 0.0001 inch (inch output)

[Valid data range] –99999999 to 99999999

- **Position deviation with fine acceleration/ deceleration enabled**

DGN | 303 | Position deviation with fine acceleration/deceleration enabled

[Data type] Two–word axis

[Unit of data] Detection unit

[Valid data range] –99999999 to 99999999

- **Reference counter**

DGN | 304 | Reference counter for individual axes

[Data type] Two–word axis

[Unit of data] Detection unit

[Valid data range] –99999999 to 99999999

- **Displacement detection**

DGN | 305 | Position feedback data between Z phases of individual axes

[Data type] Two–word axis

[Unit of data] Detection unit

[Valid data range] –99999999 to 99999999

If displacement detection is enabled, the feedback data between the Z phases of different axes is represented in the detection unit.

- **Machine coordinates of angular axis/orthogonal axis**

DGN	306	Machine coordinates of a slant axis in the Cartesian coordinate system

DGN	307	Machine coordinates of an orthogonal axis in the Cartesian coordinate system

[Data type] Two–word

[Unit of data]

Increment system	IS–A	IS–B	IS–C	Unit
Metric input	0.01	0.01	0.01	mm
Inch input	0.001	0.001	0.001	inch
Rotation axis	0.01	0.01	0.01	deg

[Valid data range] –99999999 to 99999999

These parameters are updated only when bit 0 (AAC) of parameter No. 8200 is set to 1, and any of the parameters below is set to 1:

- Bit 0 (AOT) of parameter No. 8201
- Bit 1 (AO2) of parameter No. 8201
- Bit 2 (AO3) of parameter No. 8201
- Bit 3 (QSA) of parameter No. 5009 (T series only)
- The interference check option is selected.

- **Motor temperature information**

DGN	308	Servo motor temperature

[Data type] Byte axis

[Unit of data] °C

[Valid data range] 0 to 255

The α*i* servo motor coil temperature is indicated.
When the temperature reaches 140°C, an alarm about motor overheat is issued.

DGN	309	Pulse coder temperature

[Data type] Byte axis

[Unit of data] °C

[Valid data range] 0 to 255

The temperature of the pulse coder printed circuit board is indicated.
When the temperature reaches 100°C (85°C for the atmosphere temperature in the pulse coder), an alarm about motor overheat is issued.

NOTE
1 The temperature data must fall within the following ranges.
  50°C to 160°C ±5°C
  160°C to 180°C ±10°C
2 The temperature at which an overheat alarm is issued has a maximum error of 5°C.
3 Information on axes other than the αi servo axis is not indicated. (Indicated by "0°C.")

- **Cause of the APZ bit (bit 4 of parameter 1815) brought to 0**

		#7	#6	#5	#4	#3	#2	#1	#0
DGN	310		DTH	ALP	NOF	BZ2	BZ1	PR2	PR1

#0(PR1): The setting of the following parameters has been changed: Parameters 1821, 1850, 1860, 1861.

#1(PR2): The setting of the ATS bit (bit 1 of parameter 8302) has been changed.

#2(BZ1): The detected APC battery voltage is 0 V (Inductosyn).

#3(BZ2): The detected APC battery voltage is 0 V (separate position detector).

#4(NOF): The Inductosyn output no offset data.

#5(ALP): Before the α pulse coder detects a full single rotation, reference position establishment by parameters was attempted.

#6(DTH): A controlled axis detach signal/parameter was input.

		#7	#6	#5	#4	#3	#2	#1	#0
DGN	311		DUA	XBZ	GSG	AL4	AL3	AL2	AL1

#0(AL1): An APC alarm was issued.

#2(AL3): The detected APC battery voltage is 0 V (serial pulse coder).

#3(AL4): An abnormal rotation speed (RCAL) was detected.

#4(GSG): The G202 signal was brought from 0 to 1.

#1(AL2): A disconnection was detected.

#6(DUA): While the dual position feedback function was being used, the difference in error between the semi–closed loop side and the closed loop side became too large.

#5(XBZ): The detected APC battery voltage is 0 V (serial separate position detector).

- **FSSB status**

		#7	#6	#5	#4	#3	#2	#1	#0
DGN	320	CFE		ERR	ERP	OPN	RDY	OPP	CLS

Indicates the internal status of the FSSBC.

#0(CLS): Closed.

#1(OPP): Running OPEN protocol.

#2(RDY): Open and ready.

#3(OPN): Open.

#4(ERP): Running ERROR protocol.

#5(ERR):

#7(CFE): Encountered configuration error.
(The actual slave type does not match the one specified in the conversion table.)

		#7	#6	#5	#4	#3	#2	#1	#0
DGN	321	XE3	XE2	XE1	XE0	ER3	ER2	ER1	ER0

Indicates the cause of an FSSBC error.

#0(ER0): INFORMED ERROR

#1(ER1): (RESERVE)

#2(ER2): Master port disconnection

#3(ER3): External EMG input

Indicates the cause of an FSSBC error resulting from a request from a slave.

#4(XE0): (RESERVE)

#5(XE1): Slave port disconnection

#6(XE2): Master port disconnection

#7(XE3): External EMG input

		#7	#6	#5	#4	#3	#2	#1	#0
DGN	330					EXT	DUA	ST1	ST0
DGN	332					EXT	DUA	ST1	ST0
DGN	to 348					EXT	DUA	ST1	ST0

#0, #1(ST0, ST1): Indicates the type code for an actually connected slave.

ST1	ST0	Type	Address
0	0	A	Servo amplifier
0	1	(B: RESERVE)	(Currently nonexistent)
1	0	C	Stand–alone type detector interface unit
1	1	(RESERVE)	(Currently nonexistent)

#2(DUA): 0 : The slave of interest is not on the first axis of the two–axis amplifier.
1 : The slave of interest is on the first axis of the two–axis amplifier.

#3(EXT): 0 : The slave of interest does not exist.
1 : The slave of interest exists.

		#7	#6	#5	#4	#3	#2	#1	#0
DGN	331			DMA	TP1	TP0	HA2	HA1	HA0
DGN	333			DMA	TP1	TP0	HA2	HA1	HA0
to									
DGN	349			DMA	TP1	TP0	HA2	HA1	HA0

#0, #1, #2(HA0, HA1, HA2): Indicates the host LSI address specified as a DMA destination.

#3, #4 (TP0, TP1): Indicates the type code of a specified slave.
(See the above descriptions about ST0 and ST1.)

#5(DMA): Indicates a value determining whether to allow DMA to occur.

NOTE
A combination of parameter Nos. 330 and 331 corresponds to one FSSB slave unit. Up to ten slave units are available.

Slave units and the associated diagnosis numbers

Slave unit 00	→	Diagnosis No. 330, No. 331
Slave unit 01	→	Diagnosis No. 332, No. 333
Slave unit 02	→	Diagnosis No. 334, No. 335
Slave unit 03	→	Diagnosis No. 336, No. 337
Slave unit 04	→	Diagnosis No. 338, No. 339
Slave unit 05	→	Diagnosis No. 340, No. 341
Slave unit 06	→	Diagnosis No. 342, No. 343
Slave unit 07	→	Diagnosis No. 344, No. 345
Slave unit 08	→	Diagnosis No. 346, No. 347
Slave unit 09	→	Diagnosis No. 348, No. 349

- **Details of invalid servo parameter setting alarms (on the servo side)**

DGN	352	Detail number for invalid servo parameter setting alarm

Indicates information that can be used to identify the location (parameter) and cause of an invalid servo parameter setting alarm (servo alarm No. 417).
This diagnosis information is valid when the following conditions are satisfied.

- Servo alarm No. 417 has occurred.
- Bit 4 of diagnosis No. 203 (PRM) = 1

See the following table for the displayed detail numbers and the corresponding causes. For further detail information that could be used to take measures, refer to FANUC AC Servo Motor αi series Parameter Manual (B–65270EN).

- **Detailed descriptions about invalid servo parameter setting alarms**

Detail number	Parameter number	Cause	Measure
0233	2023	A value specified as the number of velocity pulses is greater than 13100 when initialization bit 0 = 1.	Decrease the value specified as the number of velocity pulses to within 13100.
0243	2024	A value specified as the number of position pulses is greater than 13100 when initialization bit 0 = 1.	Decrease the value specified as the number of position pulses to within 13100.
0434 0435	2043	The internal value of the velocity loop integration gain has overflowed.	Decrease the value specified in the velocity loop integration gain parameter.
0444 0445	2044	The internal value of the velocity loop proportional gain has overflowed.	Use a function for changing the internal format of the velocity loop proportional gain.
0474 0475	2047	The internal value of the observer parameter (POA1) has overflowed.	Change the setting to: (–1) × (desired setting)/10
0534 0535	2053	The internal value of the dead zone compensation parameter has overflowed.	Decrease the setting until the invalid parameter setting alarm will not occur any longer.
0544 0545	2054	The internal value of the dead zone compensation parameter has overflowed.	Decrease the setting until the invalid parameter setting alarm will not occur any longer.
0686 0687 0688	2068	The internal value of the feedforward coefficient has overflowed.	Use the position gain magnification function.
0694 0695 0696 0699	2069	The interval value of the velocity feedforward coefficient has overflowed.	Decrease the velocity feedforward coefficient.

Detail number	Parameter number	Cause	Measure
0754 0755	2075	The setting of the parameter listed at the left has overflowed.	This parameter is presently not in use. Specify 0 in it.
0764 0765	2076	The setting of the parameter listed at the left has overflowed.	This parameter is presently not in use. Specify 0 in it.
0783	2078	The conversion coefficient parameter listed at the left has not been set up for a full–closed loop linear motor (for the Series 9080 only).	Set a value in this parameter.
0793	2079	The conversion coefficient parameter listed at the left has not been set up for a full–closed loop linear motor (for the Series 9080 only).	Set a value in this parameter.
0843	2084	No positive value has been set for the flexible feed gear numerator. Alternatively, the following condition exists: Feed gear numerator > denominator	Specify a positive value as the flexible feed gear numerator. Alternatively, satisfy the following condition: Feed gear numerator $\leqq$ denominator (except for phase A–/B–specific stand–alone type detector).
0853	2085	No positive value has been set as the flexible feed gear denominator.	Specify a positive value as the flexible feed gear denominator.
0884 0885 0886	2088	The internal value of the machine velocity feedback coefficient has overflowed.	Decrease the machine velocity feedback coefficient. Alternatively, use the damping control function, which has an equivalent effect.
0883	2088	A value of 100 or greater was specified in the machine velocity feedback coefficient for an axis with a serial stand–alone type detector.	The maximum allowable value for the machine velocity feedback coefficient for axes with a serial stand–alone type detector is 100. Decrease the setting to within 100.
0926 0927 0928	2092	The interval value of the advance feedforward coefficient has overflowed.	Use the position gain magnification function.
0996	2099	The internal value for suppressing N pulses has overflowed.	Decrease the setting of the parameter listed at the left.
1123	2112	No value has been entered for the AMR conversion coefficient parameter when a linear motor is in use.	Specify the AMR conversion coefficient.
1183	2118	No value has been specified in the semi–/full–closed loop error threshold parameter for a full–closed loop linear motor (for the Series 9080 only).	Specify a semi–/full–closed loop error threshold value for the parameter listed at the left.
1284 1285	2128	If the value specified as the number of velocity pulses is small, the internal value of the current control parameter overflows.	Decrease the value for the parameter listed at the left to within a range where no alarm will occur any longer.
1294 1295	2129	If the value specified as the number of velocity pulses is large, the internal value of the current control parameter overflows.	Re–set “a” to a smaller value when the setting of the parameter listed at the left is broken up into: $a \times 256 + b$

Detail number	Parameter number	Cause	Measure
1393	2139	The setting of the linear motor AMR offset has exceeded ±45.	Decrease the setting of the parameter listed at the left to within ±45.
1446 1447 1448	2144	The cutting feedforward coefficient for the cutting–/rapid traverse–specific FAD function has overflowed.	Use the position gain magnification function.
1454 1455 1456 1459	2145	The cutting velocity feedforward coefficient for the cutting–/rapid traverse–specific FAD function has overflowed.	Decrease the velocity feedforward coefficient.
8213	1821	No positive value has been set in the reference counter capacity parameter.	Specify a positive value in the parameter listed at the left.
8254 8255 8256	1825	The internal value of the position gain has overflowed.	Use the position gain magnification function.
10016 10019	2200 bit 0	The internal value of a parameter used to detect runaway has overflowed.	Do not use the runaway detection function (specify bit 0 = 1).
10043	1815#1 2010#2	A full–closed loop has been set up for a linear motor (except for the Series 9080).	A full–closed loop cannot be specified for linear motors.
10053	2018#0	The scale reverse connection bit has been set up for a linear motor.	The scale reverse connection bit cannot be used for linear motors.
10062	2209#4	The amplifier in use does not support the HC alarm avoidance function.	If you want to use this amplifier, reset the function bit listed at the left to 0. If you want to use the HC alarm avoidance function, use an amplifier that supports it.

- **Error detection**

DGN | 360 | Cumulative command pulse count (NC)

[Data type] Two–word axis

[Unit of data] Detection unit

[Valid data range] –99999999 to 99999999

Indicates the cumulative count of movement commands distributed from the CNC since the power was switched on.

DGN | 361 | Cumulative compensation pulse count (NC)

[Data type] Word axis

[Unit of data] Detection unit

[Valid data range] –32767 to 32767

Indicates the cumulative count of compensation pulses (backlash compensation, pitch error compensation, etc.) distributed from the CNC since the power was switched on.

DGN | 362 | Cumulative command pulse count (SV)

[Data type] Two–word axis

[Unit of data] Detection unit

[Valid data range] –99999999 to 99999999

Indicates the cumulative count of movement command and compensation pulses received at the servo section since the power was switched on.

DGN | 363 | Cumulative feedback pulse count (SV)

[Data type] Two–word axis

[Unit of data] Detection unit

[Valid data range] –99999999 to 99999999

Indicates the cumulative count of position feedback pulses received from the pulse coder by the servo section.

- **Diagnostic data related to the Inductosyn absolute position detector**

DGN | 380 | Difference between the absolute position of the motor and offset data

[Data type] Two–word axis

[Units of data] Detection units

$$\frac{\text{M (absolute position of the motor)} - \text{S (offset data)}}{\lambda\text{(pitch interval)}}$$

The remainder resulting from the division is displayed.

DGN | 381 | Offset data from the Inductosyn

[Data type] Two–word axis

[Units of data] Detection units

Off set data is displayed when CNC calculates the machine position.

- **Flexible synchronization error**

DGN	390	Flexible synchronization error (A)
DGN	391	Flexible synchronization error (B)
DGN	392	Flexible synchronization error (C)
DGN	393	Flexible synchronization error (D)

[Data type] Two–word

[Units of data] Detection units

[Valid data range] –99999999 to 99999999

The difference between the error of the master axis of each group set with the flexible synchronization function and a master axis error found from the slave axis is displayed.

- **Serial spindle**

		#7	#6	#5	#4	#3	#2	#1	#0
DGN	400				SAI	SS2	SSR	POS	SIC

#4(SAI) 0 : Spindle analog control is not used.
1 : Spindle analog control is used.

#3(SS2) 0 : Spindle serial doesn't control 2nd spindle.
1 : Spindle serial control 2nd spindle.

#2(SSR) 0 : Spindle serial control is not performed.
1 : Spindle serial control is performed.

#1 (POS) A module required for spindle analog control is
0 : not mounted
1 : mounted

#0 (SIC) A module required for spindle serial control is
0 : not mounted
1 : mounted

DGN	401	Serial spindle alarm state of First spindle
DGN	402	Serial spindle alarm state of Second spindle
DGN	403	First spindle motor temperature
DGN	404	Second spindle motor temperature

[Data type] Byte

[Unit of data] °C

[Valid data range] 0 to 255

The α*i* spindle motor coil temperature is indicated.
This temperature is used as a guideline for occurrence of the spindle overheat alarm.
(However, the temperature at which overhear occurs varies with the motor.)

NOTE
1 The temperature data must fall within the following ranges.
- 50°C to 160°C ±5°C
- 160°C to 180°C ±10°C

2 The indicated temperature and the temperature at which overhear occurs have the following errors.
- 160°C or less Up to 5°C
- 160°C to 180°C Up to 10°C

3 For spindles older than the α*i* spindle, this function is invalid.
4 When the system configuration of the spindle (even another spindle) includes an additional spindle older than the α*i* spindle, this function is invalid.

		#7	#6	#5	#4	#3	#2	#1	#0
DGN	408	SSA		SCA	CME	CER	SNE	FRE	CRE

#0 (CRE): A CRC error occurred. (Warning)

#1 (FRE): A framing error occurred. (Warning)

#2 (SNE): The transmission/reception target is invalid.

#3 (CER): An error occurred during reception.

#4 (CME): No response was returned during automatic scanning.

#5 (SCA): A communication alarm occurred on the spindle amplifier side.

#7 (SSA): A system alarm occurred on the spindle amplifier side.
(These problems cause spindle alarm 749. Such problems are mainly caused by noise, disconnection, or instantaneous power–off).

		#7	#6	#5	#4	#3	#2	#1	#0
DGN	409					SPE	S2E	S1E	SHE

Refer to this diagnosis when alarm 750 has generated.

#3 (SPE) In spindle serial control serial spindle parameters
0 : Satisfy start condition of spindle unit
1 : Do not satisfy start condition of spindle unit

#2 (S2E) 0 : 2nd spindle started normally in spindle serial control.
1 : 2nd spindle did not start normally in spindle serial control.

#1 (S1E) 0 : 1st spindle started normally in spindle serial control.
1 : 1st spindle did not start normally in spindle serial control.

#0 (SHE) 0 : Serial communication module is correct on CNC side.
1 : An error occurred in serial communication module on CNC side

DGN	410	Load meter of 1st spindle [%]
DGN	411	Speed meter of 1st spindle [min^{-1}]
DGN	412	Load meter of 2nd spindle [%]
DGN	413	Speed meter of 2nd spindle [min^{-1}]
DGN	414	Position error in 1st spindle synchronous control mode
DGN	415	Position error in 2nd spindle synchronous control mode
DGN	416	Absolute value of synchronization error between 1st and 2nd spindles
DGN	417	Feedback information of 1st spindle position coder
DGN	418	Position error of 1st spindle position loop mode
DGN	419	Feedback information of 2nd spindle position coder
DGN	420	Feedback information of 2nd spindle position coder
DGN	421	Feedback information of the position coder of the third spindle
DGN	422	Position deviation in the position loop mode of the third spindle
DGN	423	Feedback information of the position coder of the fourth spindle
DGN	424	Position deviation in the position loop mode of the fourth spindle
DGN	425	First–spindle synchronization error
DGN	426	Second–spindle synchronization error
DGN	427	Third–spindle synchronization error
DGN	428	Fourth–spindle synchronization error

No. 425 to 428: Indicates the absolute value of a synchronization error in synchronization mode where each spindle is treated as a slave axis.

		#7	#6	#5	#4	#3	#2	#1	#0
DGN	430				SS4	SS3	SSR		SIC

#4(SS4) 0 : Specifies not to use the fourth spindle under spindle serial control.
1 : Specifies to use the fourth spindle under spindle serial control.

#3(SS3) 0 : Specifies not to use the third spindle under spindle serial control.
1 : Specifies to use the third spindle under spindle serial control.

#2(SSR) 0 : Spindle serial control (third and fourth spindles) not in progress.
1 : Spindle serial control (third and fourth spindles) in progress.

#0(SIC) Indicates whether a module necessary for spindle serial control (third and fourth spindles) has been installed, as follows:
0 : Not installed
1 : Installed

DGN	431	Alarm status of the third serial spindle
DGN	432	Alarm status of the fourth serial spindle
DGN	433	Third spindle motor temperature
DGN	434	Fourth spindle motor temperature

[Data type] Byte

[Unit of data] °C

[Valid data range] 0 to 255

The α*i* spindle motor coil temperature is indicated.
This temperature is used as a guideline for occurrence of the spindle overheat alarm.
(However, the temperature at which overhear occurs varies with the motor.)

NOTE
1 The temperature data must fall within the following ranges.
- 50°C to 160°C ±5°C
- 160°C to 180°C ±10°C

2 The indicated temperature and the temperature at which overhear occurs have the following errors.
- 160°C or less Up to 5°C
- 160°C to 180°C Up to 10°C

3 For spindles older than the α*i* spindle, this function is invalid.
4 When the system configuration of the spindle (even another spindle) includes an additional spindle older than the α*i* spindle, this function is invalid.

		#7	#6	#5	#4	#3	#2	#1	#0
DGN	438								

Information about communication errors for spindle serial control (third and fourth spindles).
For contents, see the descriptions about diagnosis No. 408.

		#7	#6	#5	#4	#3	#2	#1	#0
DGN	439					SPE	S4E	S3E	SHE

#3(SPE): Indicates the state of the serial spindle parameter (third and fourth spindles) for spindle serial control, as follows:

0 : The start condition for the spindle unit is satisfied.
1 : The start condition for the spindle unit is not satisfied.

#2(S4E): 0 : The fourth spindle was started normally under spindle serial control.
1 : The fourth spindle was not started normally under spindle serial control.

#1(S3E): 0 : The third spindle was started normally under spindle serial control.
1 : The third spindle was not started normally under spindle serial control.

#0(SHE): Indicates the state of the serial communication module (third and fourth spindles) on the CNC side as follows:

0 : Normal
1 : Abnormal

DGN	440	Third–spindle load meter indication [%]
DGN	441	Third–spindle speedometer indication [min^{-1}]
DGN	442	Fourth–spindle load meter indication [%]
DGN	443	Fourth–spindle speedometer indication [min^{-1}]
DGN	445	First–spindle position data
DGN	446	Second–spindle position data
DGN	447	Third–spindle position data
DGN	448	Fourth–spindle position data

[Data type] Word

[Unit of data] Pulse

[Valid data range] 0 to 4095

This parameter is valid when bit 1 of parameter No. 3117 = 1.
To display the position data of a spindle, execute spindle orientation.

- **Diagnostic data related to rigid tapping**

DGN	450	Spindle position error during rigid tapping

[Data type] Word

[Unit of data] Detection units

DGN	451	Spindle distribution during rigid tapping

[Data type] Word

[Unit of data] Detection units

DGN	454	Accumulated spindle distribution during rigid tapping

[Data type] Two–word

[Unit of data] Detection units

DGN	455	Instantaneous difference for the move command, calculated in terms of the spindle, during rigid tapping (signed, accumulated value)

[Data type] Two–word

[Unit of data] Detection units

DGN	456	Instantaneous difference for the travel error, calculated in terms of the spindle, during rigid tapping (signed)

[Data type] Word

[Unit of data] Detection units

DGN	457	Width of synchronization error during rigid tapping (maximum value)

[Data type] Word

[Unit of data] Detection units

- **Two–spindle polygon machining (T series only)**

This data indicates the status of the polygon synchronization mode.

		#7	#6	#5	#4	#3	#2	#1	#0
DGN	470	SC0	LGE		SCF			PST	SPL

#0(SPL): Spindle polygon synchronization is in progress.

#1(PST): Spindle polygon synchronization mode is starting.

#2: Spindle polygon synchronization mode is being released.

#3: The spindle speed is being changed in spindle polygon synchronization mode.

#4(SCF): The spindle speed has been changed in spindle polygon synchronization mode.

#5: Not used

#6(LGE): In spindle polygon synchronization mode, the two spindles have different loop gains.

#7(SC0): In spindle polygon synchronization mode, the specified speed is zero.

CAUTION

1 If SPL and SCF are set to 1 and #1, #2, and #3 are set to 0 in polygon synchronization mode, the operation is normal.

2 If the status does not change, even though PST is set to 1 and the program is stopped in a block including G51.2, one of the spindles cannot attain the polygon synchronization speed. This may occur when the spindle cannot be activated because the PSTU bit (bit 7 of parameter No. 7603) is set to 0.

3 LGE is set to 1 when the speed is changed in polygon synchronization mode if the serial spindle control unit uses different loop gains for the first and second spindles during spindle synchronization.
When this function is used, the two spindles must be controlled with an identical loop gain. The warning is displayed in DGN, but the warning does not cause an alarm. (The serial spindle control unit switches parameters according to the statuses of CTH1, CTH2, and other signals.)

4 SCO is set to 1 if either of the following occurs: The combination of the programmed S value and spindle control signals including *SSTP <G0029, #6>, SOV0 to SOV7 <G0030> and multispindle control signal <G0027> causes 0 or a value smaller than the resolution of spindle control to be programmed (the programmed value multiplied by 4095/highest–spindle–speed is smaller than 1).
Alternatively, SIND control <G0032, G0033> is used and the programmed output is 0.
When SCO is set to 1, the spindle speed becomes 0, setting bit 0 of DGN 471 to 1 and disabling the ratio of polygon synchronization rotation. This, however, is handled as a result of the program, and does not cause P/S alarm No. 5018.

This data indicates the cause of P/S alarm 5018 or 218.

		#7	#6	#5	#4	#3	#2	#1	#0
DGN	471	NPQ	PQE		NSP	SUO	QCL	PCL	

#0 to #3 Cause of P/S alarm No. 5018
P/S alarm No. 5018 can be cleared by issuing a reset. The cause indication is retained until the cause is removed or until polygon synchronization mode is released.

#4 to #7 Cause of P/S alarm No. 218
If P/S alarm No. 218 occurs, polygon synchronization mode is released. The cause indication, however, is retained until P/S alarm No. 218 is cleared by issuing a reset.

#0: The speed specified for spindle polygon synchronization is too low. (The unit speed becomes 0 for internal operations.)

#1(PCL): The first spindle (master axis in polygon synchronization) is clamped.

#2(QCL): The second spindle (slave axis in polygon synchronization) is clamped.

#3(SUO): The speed specified in spindle polygon synchronization is too high. (The speed is restricted to the upper limit for internal operations.)

#4(NSP): A spindle required for control is not connected. (The serial spindle, second spindle, etc. is not connected.)

#5: A negative Q value is specified while the QDRC bit (bit 1 of parameter No. 7603) is set to 1.

#6(PQE): The P value or Q value, specified with G51.2, falls outside the predetermined range. Alternatively, the P and Q values are not specified as a pair.

#7(NPQ): Although the P and Q values are not specified with G51.2, an R value is specified. Alternatively, none of the P, Q, or R value is specified.

CAUTION

Bit 0 is set to 1 even when the specified spindle speed is 0 (bit 7 of DGN 470 is set to 1). This, however, does not cause P/S alarm No. 5018 to be output (because the programmed speed is 0). P/S alarm No. 5018 occurs when bit 7 of DGN 470 is set to 0, while bit 0 of DGN 471 is set to 1. Normal spindle speeds will not cause this alarm to be output.

NOTE

1 PCL indicates that the speed specified for the master axis exceeds the maximum speed for the first axis, specified in parameters No. 3741 to 3744, causing, the specified speed to be limited to the maximum speed.
PCL is not set to 1 provided the first spindle is connected correctly.
2 QCL is set to 1 when the polygon synchronization speed specified for the second spindle (slave axis in polygon synchronization) exceeds the value set in parameter No. 7621, causing the actual speed to be limited to the specified value.
3 SUO occurs if the number of distributed pulses for ITP exceeds 32767, that is, if the speed specified for the first axis, divided by the specified P value, exceeds 59998. In other words, SUO occurs when a speed in excess of 59998 min^{-1} is specified for the first axis if P is set to 1.

The specified synchronization mode status is displayed.

DGN 474 Rotation ratio of the master axis in spindle polygon synchronization (specified P value)

In spindle polygon synchronization mode, the rotation ratio (specified P value) of the current master axis (first spindle) is displayed.

DGN 475 Rotation ratio of the slave axis in spindle polygon synchronization (specified Q value)

In spindle polygon synchronization mode, the rotation ratio (specified Q value) of the current slave axis (second axis) is displayed.

DGN 476 Phase difference between two spindles in spindle polygon synchronization (specified R value)

In spindle polygon synchronization mode, the current phase difference (specified R value) is displayed.(The units are the minimum input increment for the rotation axis of the machine.)

If the RDGN bit (bit 5 of parameter 7603) is set to 1, the shift amount specified for the serial spindle (number of specified pulses, calculated at a rate of 4096 pulses per 360 degrees) is displayed.

This diagnostic data indicates the actual speed of each spindle in synchronization mode.

DGN 477 Actual speed of the master axis for spindle polygon synchronization (min^{-1})

In spindle polygon synchronization mode, the actual speed of the master axis (first spindle) is displayed.

DGN 478 Actual speed of the slave axis in spindle polygon synchronization (min^{-1})

In spindle polygon synchronization mode, the actual speed of the slave axis (second spindle) is displayed.

NOTE
The values of DGN 477 and DGN 478 are displayed without being sampled. The displayed values may vary from the actual values. Use these values for guidance only.

- **State of remote buffer (protocol A)**

DGN	500	Send command

1: SYN 2: RDY 3: RST 4: ALM
5: SAT 6: GTD 7: RTY 8: SDI

DGN	501	Receive command

1: SYN 2: RDY 3: ARS 4: AAL
5: CLB 6: SET 7: DAT 8: EOD
9: WAT 10: RTY 11:RDI 12: SDO

DGN	502	State of remote buffer

0 : Not ready
1 : Reset state
2 : Operation state
3 : Alarm state
4 : Circuit disconnection

- **Open CNC**

		#7	#6	#5	#4	#3	#2	#1	#0
DGN	510								

This data indicates the internal Open CNC information (not available to general users).

		#7	#6	#5	#4	#3	#2	#1	#0
DGN	511								

This data indicates the internal Open CNC information (not available to general users).

		#7	#6	#5	#4	#3	#2	#1	#0
DGN	512					THH	THL		PRA

This data indicates the cause of a system alarm that has occurred in Open CNC.

#0(PRA) 1 : A RAM parity error occurred in shared RAM.

#3, #2(THL, THH):

THL	THH	Status
0	0	A battery alarm has occurred in the PANEL *i* or CNC display unit with PC functions.
1	0	A high–temperature condition has occurred in the PANEL *i* or CNC display unit with PC functions.
0	1	A low–temperature condition has occurred in the PANEL *i* or CNC display unit with PC functions.
1	1	Normal (connected to the PC)

#4 0 : Normal
1 : An NMI has occurred in HSSB.

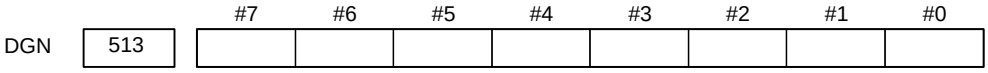

Indicates the internal information about the HSSB (open CNC). (Hidden function)

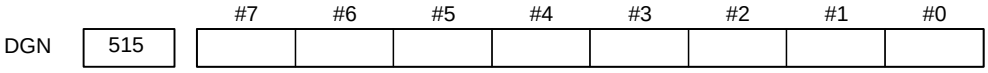

Indicates the internal information about the HSSB (channel 2). (Hidden function)

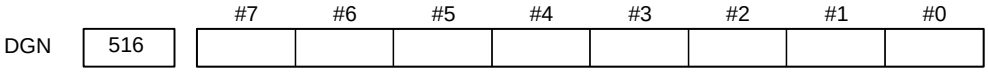

Indicates the internal information about the HSSB (channel 2). (Hidden function)

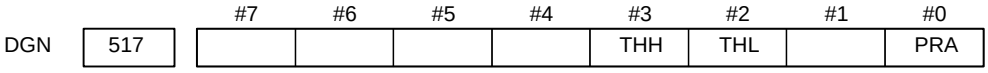

Indicates the internal information about the HSSB (channel 2) as follows.

#0(PRA): 0 : Normal
1 : A RAM parity error has occurred in shared RAM.

#3, #2(THL, THH):

THL	THH	Status
0	0	A battery alarm has occurred in the PANEL *i* or CNC display unit with PC functions.
1	0	A high–temperature condition has occurred in the PANEL *i* or CNC display unit with PC functions.
0	1	A low–temperature condition has occurred in the PANEL *i* or CNC display unit with PC functions.
1	1	Normal (connected to the PC)

#4: 0 : Normal
1 : An NMI has occurred in the HSSB.

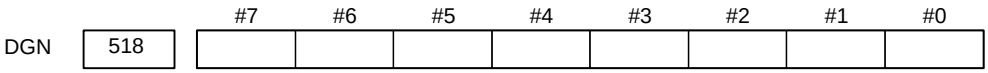

Indicates the internal information about the HSSB (channel 2). (Hidden function)

- **Diagnostic data related to a small–diameter peck drilling cycle (M series only)**

DGN	520	Total number of retractions during cutting after G83 is specified

Executing the G83 command clears the value to zero.

DGN	521	Total number of retractions made by receiving the overload signal during cutting after G83 is specified

Executing the G83 command clears the value to zero.

DGN	522	Position on the drill axis from which retraction is started

The units are the same as the minimum input increment.

DGN	523	Difference between the position on the drill axis from which the previous retraction was started and the position from which the current retraction is started

The units are the same as the minimum input increment.

- **Diagnostic data related to ATC for ROBO DRILL α**

		#7	#6	#5	#4	#3	#2	#1	#0
DGN	530			A99	A98	A97	A96	A95	A43

* Check the contents of this data if alarm 251 is output.

#5 (A99): A pry alarm occurred while the tool was being changed.

#4 (A98): After the power was turned on or after an emergency stop was released, M06 was specified before the first reference position return. While the tool was being changed, machine lock was enabled for the Z–axis.

#3 (A97): M06 is specified in canned cycle mode. M06 is specified in a block containing the command instructing reference position return. M06 is specified in tool compensation mode.

#2 (A96): The current tool number parameter (parameter No. 7810) is set to 0.

#1 (A95): M06 is specified while the Z–axis machine coordinate is positive.

#0 (A43): A prohibited T code is specified after M06.

		#7	#6	#5	#4	#3	#2	#1	#0
DGN	531		585	584	583	582	581	580	502

#6 (585): Spindle servo alarm (excessive error during ATC magazine indexing)

#5 (584): Invalid sequence during positioning and ATC (system error)

#4 (583): Spindle servo alarm (LSI overflow)

#3 (582): Spindle servo alarm (excessive drift)

#2 (581): Spindle servo alarm (excessive error during travel)

#1 (580): Spindle servo alarm (excessive error in the stop state)

#0 (502): Large spindle distribution (system error)

- **Diagnostic data related to simple synchronous control**

DGN	540	Difference in the position error between the master and slave axes in simple synchronas control
DGN	541	Difference in the position error between the master and slave axes in simple synchronas control

DGN 540 indicates the difference in the position error between the master and slave axes when a single axis pair is subjected to simple synchronous control. DGN 541 is used when two or more pairs are subjected to simple synchronous control. The position error is indicated for the master axis.

DGN 540 and 541 indicate values in detection units. They are displayed only with the M series.

- **Diagnostic data related to the dual position feedback function**

DGN	550	Closed loop error

[Data type] 2–word axis

[Unit of data] Detection units

[Valid data range] –99999999 to +99999999

DGN	551	Semi–closed loop error

[Data type] 2–word axis

[Unit of data] Detection units

[Valid data range] –99999999 to +99999999

DGN	552	Error between semi–closed and closed loops

[Data type] word axis

[Unit of data] Detection units

[Valid data range] –32768 to +32767

DGN	553	Amount of dual position compensation

[Data type] 2–word axis

[Unit of data] Detection units

[Valid data range] –99999999 to +99999999

The data items displayed on the diagnosis screen are obtained at the following positions:

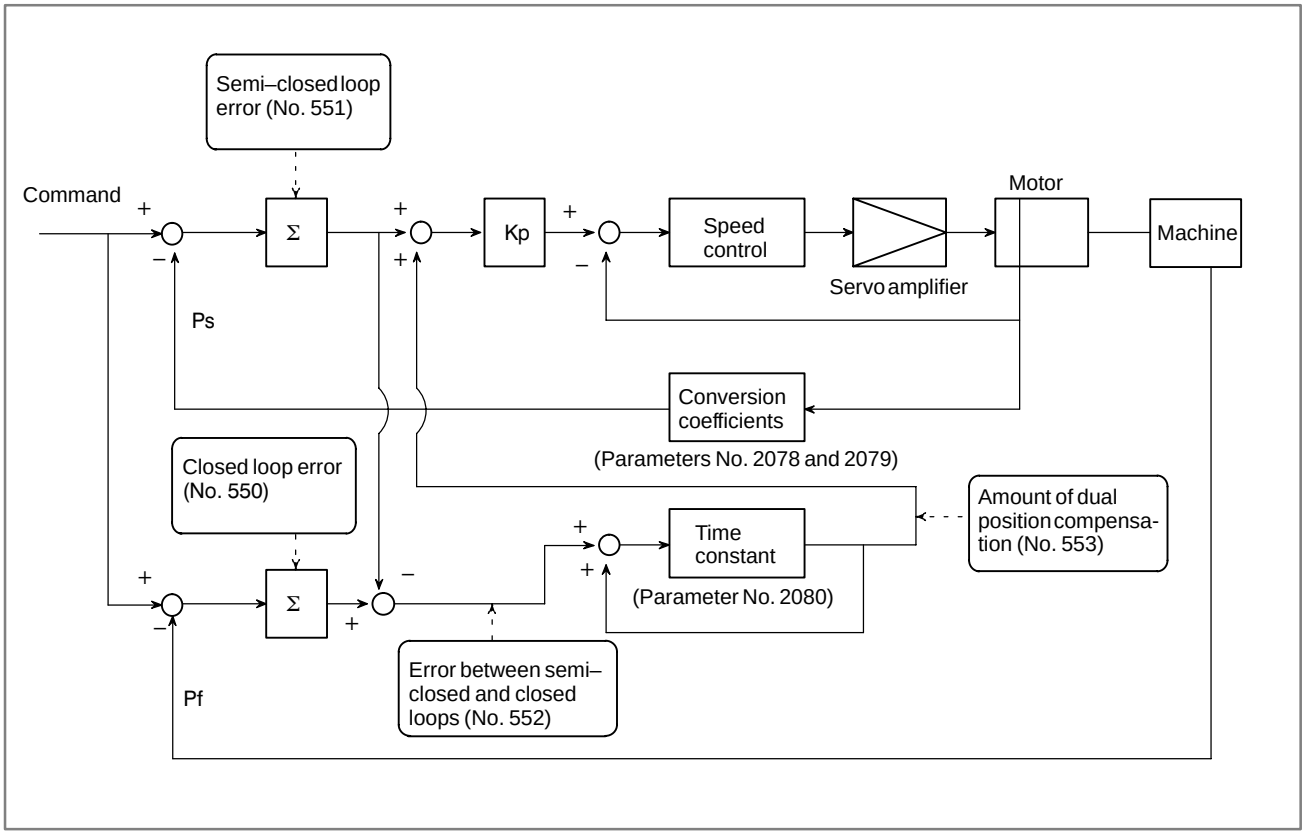

- **Status after execution of manual tool compensation (for the T series only)**

DGN | 560 | Status after execution of manual tool compensation

0 : Manual tool compensation ended normally.
1 : The data of the T code command is out of the allowable range.
2 : The offset value is out of the allowable range.
3 : The offset number is out of the allowable range.
4 : The CNC is running automatically or moving the axes.
5 : The CNC is in tool tip radius compensation mode.
6 : The CNC is not in JOG or HNDL (INCR) mode.
7 : The setting of a CNC parameter is invalid.

- **FSSB2 status**

		#7	#6	#5	#4	#3	#2	#1	#0
DGN	620	CFE		ERR	ERP	OPN	RDY	OPP	CLS

Indicates the internal status of the FSSBC2.

#0(CLS): Closed.

#1(OPP): Running OPEN protocol.

#2(RDY): Open and ready.

#3(OPN): Open.

#4(ERP): Running ERROR protocol.

#7(CFE): Encountered configuration error.
(The actual slave type does not match the one specified in the conversion table.)

		#7	#6	#5	#4	#3	#2	#1	#0
DGN	621	XE3	XE2	XE1	XE0	ER3	ER2	ER1	ER0

Indicates the cause of an FSSBC2 error.

#0(ER0): INFORMED ERROR

#1(ER1): (RESERVE)

#2(ER2): Master port disconnection

#3(ER3): External EMG input

Indicates the cause of an FSSBC2 error resulting from a request from a slave.

#4(XE0): (RESERVE)

#5(XE1): Slave port disconnection

#6(XE2): Master port disconnection

#7(XE3): External EMG input

		#7	#6	#5	#4	#3	#2	#1	#0
DGN	630					EXT	DUA	ST1	ST0
DGN	632					EXT	DUA	ST1	ST0
	to								
DGN	648					EXT	DUA	ST1	ST0

#0, #1(ST0, ST1): Indicates the type code for an actually connected slave.

ST1	ST0	Type	Address
0	0	A	Servo amplifier
0	1	(B: RESERVE)	(Currently nonexistent)
1	0	C	Stand–alone type detector interface unit
1	1	(RESERVE)	(Currently nonexistent)

#2(DUA): 0 : The slave of interest is not on the first axis of the two–axis amplifier.
1 : The slave of interest is on the first axis of the two–axis amplifier.

#3(EXT): 0 : The slave of interest does not exist.
1 : The slave of interest exists.

		#7	#6	#5	#4	#3	#2	#1	#0
DGN	631			DMA	TP1	TP0	HA2	HA1	HA0
DGN	633			DMA	TP1	TP0	HA2	HA1	HA0
	to								
DGN	649			DMA	TP1	TP0	HA2	HA1	HA0

#0, #1, #2(HA0, HA1, HA2): Indicates the host LSI address specified as a DMA destination.

#3, #4 (TP0, TP1): Indicates the type code of a specified slave.
(See the above descriptions about ST0 and ST1.)

#5(DMA): Indicates a value determining whether to allow DMA to occur.

NOTE
A combination of parameter Nos. 630 and 631 corresponds to one FSSB2 slave unit. Up to ten slave units are available.

Slave units and the associated diagnosis numbers

Slave unit 00	→	Diagnosis No. 630, No. 631
Slave unit 01	→	Diagnosis No. 632, No. 633
Slave unit 02	→	Diagnosis No. 634, No. 635
Slave unit 03	→	Diagnosis No. 636, No. 637
Slave unit 04	→	Diagnosis No. 638, No. 639
Slave unit 05	→	Diagnosis No. 640, No. 641
Slave unit 06	→	Diagnosis No. 642, No. 643
Slave unit 07	→	Diagnosis No. 644, No. 645
Slave unit 08	→	Diagnosis No. 646, No. 647
Slave unit 09	→	Diagnosis No. 648, No. 649

- **State of high–speed HRV current control**

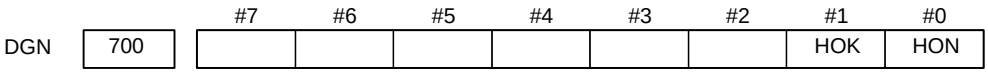

[Data type] Bit axis

The state of high–speed HRV current control is displayed.

HON: The motor is controlled in the high–speed HRV current control mode.

HOK: This bit is set to 1 when high–speed HRV current control is enabled.

High–speed HRV current control is enabled when the following conditions are satisfied:

– Bit 0 (HR3) of parameter No. 2013 is set to 1.
– Servo software, servo modules, and servo amplifiers suitable for high–speed HRV current control are used.
– When a separate detector interface unit is used, the separate detector interface unit is suitable for high–speed HRV current control.

- **Error and warning statuses of the αi spindle**

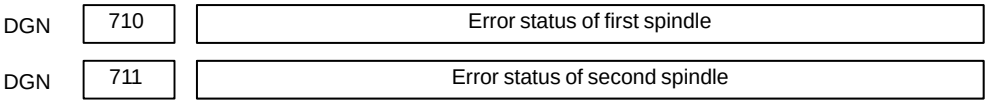

[Data type] Word

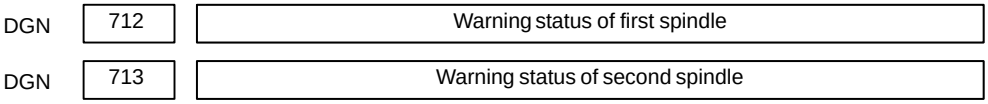

[Data type] Word

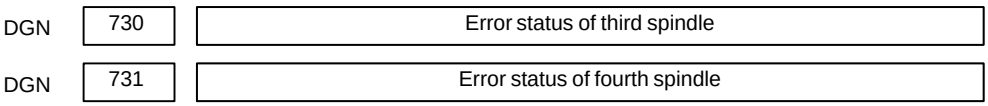

[Data type] Word

DGN	732	Warning status of third spindle
DGN	733	Warning status of fourth spindle

[Data type] Word

If an error (the yellow LED flashes and the error number appears) or warning occurred in the α*i* spindle amplifier module (SPM), the number is displayed on the diagnostic screen.
When there is no error or warning, ”0” is indicated.

NOTE
1 For spindles older than the α*i* spindle, this function is invalid.
2 When the system configuration of the spindle (even another spindle) includes an additional spindle older than the α*i* spindle, this function is invalid.

Refer to the FANUC SERVO MOTOR α*i* series Maintenance Manual (B–65285EN) for errors on the α*i* spindle.
See Subsection 10.1.4, ”Warning Interface for the α*i* Spindle” in this manual for warnings.

1.9 CNC STATE DISPLAY

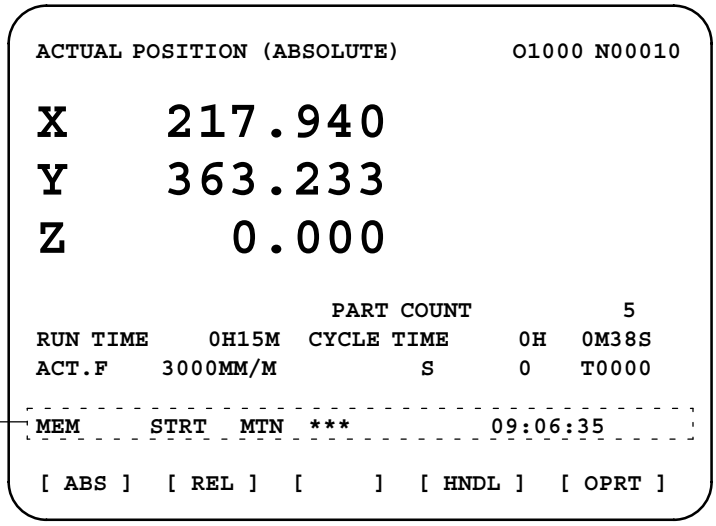

· Indicates the current status of the CNC.
· Display example and explanation

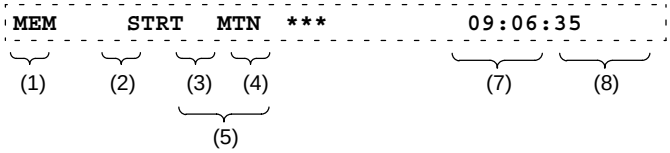

(1) Mode selection status
MEM: Automatic operation (memory operation)
MDI: Manual data input/MDI operation
EDIT: Program editing
RMT: Remote operation
JOG: Jog feed
REF: Reference position return
INC: Incremental feed mode = step feed (if no manual pulse generator is available)
HND: Manual handle feed mode
TJOG: Teaching in jog feed mode
THND: Teaching in handle feed mode

(2) Automatic operation status
STRT: Automatic operation has started (and program execution is under way).
HOLD: Automatic operation has been suspended (execution of a block has been discontinued, and automatic operation has stopped).
STOP: Automatic operation has stopped (a block has been finished, and automatic operation has stopped).
MSTR: The tool is returning or being repositioned when the tool retract and return function is executed.
****: Other status (when the power is switched on, or automatic operation has ended)

(3) Automatic operation status
MTN: Program–specified axis movement is under way.
DWL: Program–specified dwell command (G04) is being executed.
***: Other status

(4) Auxiliary function status
FIN: The completion signal FIN for an auxiliary function is being awaited.
***: Other status

(5) Emergency stop and reset status (displayed at the location of items mentioned in (3) and (4))
—EMG— : Emergency stop status
–RESET–: CNC reset status (The state in which the reset signal or the MDI RESET key remains active.)

(6) Alarm status
ALM : An alarm condition has been detected.
BAT : The lithium battery (CNC back–up battery) voltage is low (the battery is to be replaced).
Blank: Other status

(7) Clock display: Hour:minute:second

(8) Program editing/running status

Input:	Data is being input.
Output:	Data is being output.
SRCH:	A data search is under way.
EDIT:	Editing such as insertion or modification is under way.
LSK:	Label skip enabled at data input (until valid information is read).
PTRR:	Retract or return/re–positioning is under way when the tool retrack and return function is used.
HPCC:	High–precision contour control mode.
AICC:	AI contour control mode.
AI NANO:	AI nano contour control mode
AI HPCC:	AI high–precision contour control mode
NANO HP:	AI nano high–precision contour control mode
AIAPC:	AI advanced preview control mode
RVRS:	Reversing based on the retrace function.
RTRY:	Re–advancing based on the retrace function.
RVED:	Reversing based on the retrace function has ended.
Blank:	Editing is not under way.

1.10 WAVEFORM DIAGNOSTIC FUNCTION

Tuning becomes easier by graphically displaying servo error amount and torque command, etc. (Graphic option is required).

The following two types of waveform diagnosis functions are supported:

(1) One–shot type

The one–shot type waveform diagnosis function can graphically display, as a waveform, any variation in those data items listed below. The start of data sampling can be triggered by the rising or falling edge of a machine signal. This function facilitates the adjustment of the servo and spindle motors.

a. Error, pulse distribution amount, torque, speed, current, and thermal simulation data for the servo motor of each axis
b. Composite speed for the first, second, and third axes
c. Spindle motor speed and load meter value
d. On/off state of a machine signal specified with a signal address

(2) Storage type

The storage type waveform diagnosis function enables the storing of any variation in the data items listed below and, if a servo alarm occurs, the graphical display (as a waveform) of the stored data. The end of data sampling can be triggered by the rising or falling edge of a machine signal. This function facilitates the estimation of erroneous locations. Stored data can be output via the reader/punch interface.

a. Error, pulse distribution amount, torque, speed, current, and thermal simulation data for the servo motor for each axis

NOTE
1 To output stored waveform data, the optional reader/punch interface must have been installed.
2 The waveform diagnosis function is enabled when bit 0 (SGD) of parameter No. 3112 is set to 1. Note, however, that a graphics card is necessary to display waveforms.

1.10.1 Setting Parameters

		#7	#6	#5	#4	#3	#2	#1	#0
DGN	3112								SGD

#0(SGD) 0 : Do not display servo waveform (usual graphic display).
1 : Displays servo waveform (usual graphic display function cannot be used).

DGN	3120	Time between servo alarm and sampling stop (storage type)

[Data type] Word

[Unit of data] ms

[Valid data range] 1 to 32760

DGN	3121	Selection of data of waveform diagnosis storage type

[Data type] Byte

The sixth–type sampling data of storage type of the waveform diagnosis function is:

0 : Thermal simulation data
1 : Spindle load meter data of the first spindle

1.10.2 Waveform Diagnostic Parameter Screen

1.Press the [SYSTEM] key to display a system screen such as aparameter.

2. Press the continuous menu key [▷] several times, and the soft key **[W.DGNS]** is displayed.
3. Press **[W.DGNS]**, then the parameter screen for the waveform diagnosis is displayed.

Set the necessary data items. Position the cursor to the item to be set, enter the corresponding data, then press [INPUT]. Data items for which ***** is displayed cannot be set. To assist in data setting, the frame on the right side of the screen displays help information for that data to which the cursor is positioned. Help information which cannot fit into a single frame is split into several pages, which the user can scroll through using the page keys [↑ PAGE] and [PAGE ↓].

```
WAVE DIAGNOSE (PARAMETER)          O1234 N12345
                                  ┌──────────────────
GRP CONDITION 100                 │ GRP CONDITION
                                  │
SAMPLING TIME *****MS             │ (ONE-S TYPE)
                                  │ 0:START
TRIGGER *******                   │ 1:START&TRG  ↑
                                  │ 2:START&TRG  ↓
            (CH-1)    (CH-2)      │   (MEMORY TYPE)
                                  │ 100: DATA OF
DATA NO.        11        22      │      MEMORY
UNIT          1000        10      │             1/3
SIGNAL     *******   *******      └──────────────────
>                                  S      0   T0000
EDIT **** *** ***          08:20:52
[W.PRM]  [W.GRPH]  [ W.MEM ]  [     ]  [     ]
```

- **Waveform diagnosis parameters (one–shot type)**

(1) Display start condition

0 : Starts data sampling upon the **[START]** key being pressed, samples data for the specified period, then draws a waveform.
1 : Starts data sampling upon the detection of the first rising edge of the trigger signal after the **[START]** key is pressed, samples data for the specified period, then draws a waveform.
2 : Starts data sampling upon the detection of the first falling edge of the trigger signal after the [**START**] key is pressed, samples data for the specified period, then draws a waveform.

(2) Sampling period: Set the period during which data will be sampled.
Valid data range: 10 to 32760
Units: ms

(3) Trigger: Set the PMC address and bit for the signal used to trigger the start of data sampling, when 1 or 2 is set for the start condition.

Example) G0007.2: ST signal

(4) Data number: The table below lists the numbers of the data items for which a waveform can be displayed (n = 1 to 8).

Data No.	Description	Units
00	Does not display a waveform.	–
0n	Servo error (8 ms) for the n–th axis (positional deviation)	Pulses (detection units)
1n	Pulse distribution for the n–th axis (move command)	Pulses (input increments)
2n	Torque for the n–th axis (actual current)	% (relative to maximum current)
3n	Servo error (2 ms) for the n–th axis (positional deviation)	Pulses (detection units)
5n	Actual speed for the n–th axis	min^{-1}
6n	Command current for the n–th axis	% (relative to maximum current)
7n	Thermal simulation data for the n–th axis	% (OVC alarm ratio)
90	Composite speed for the first, second, and third axes	Pulses (input increments)
99	On/off state of a machine signal specified with a signal address	None
10n	Actual spindle speed for the n–th axis	% (relative to maximum rotation speed)
11n	Load meter for the n–th spindle	% (relative to maximum output)
161	Difference in position error calculated on the spindle basis	Pulses (detection unit)

(5) Data units: Weight of data when 1 is specified. The data units are automatically specified for each data item and need not be set unless the units must be changed for some reason.

[Valid data range] 1 to 1000

[Unit] 0.001

(6) Signal address: PMC address and bit number. Set in the same way as that for trigger, when the data number is 99.

- **Waveform diagnosis parameters (storage type)**

(1) Display start condition

100 : Draws a waveform for the stored data.

(2) Sampling period: Invalid

(3) Trigger: Invalid

(4) Data number: The table below lists the numbers of the data items for which a waveform can be displayed (n = 1 to 8). Numbers for which no data is stored cannot be specified.

Data No.	Description	Units
00	Does not display a waveform.	–
0n	Servo error (8 ms) for the n–th axis (positional deviation)	Pulses (detection units)
1n	Pulse distribution for the n–th axis (move command)	Pulses (input increments)
2n	Torque for the n–th axis (actual current)	% (relative to maximum current)
5n	Actual speed for the n–th axis	min^{-1}
6n	Command current for the n–th axis	% (relative to maximum current)
7n	Thermal simulation data for the n–th axis (when the parameter No.3121 is set to 0.)	% (OVC alarm ratio)
111	Load meter for the n–th spindle (when the parameter No.3121 is set to 1.)	% (relative to maximum output)

(5) Data units: Weight of data when 1 is specified. The data units are automatically specified for each data item and need not be set unless the units must be changed for some reason.

[Valid data range] 1 to 1000

[Unit] 0.001

(6) Signal address: Invalid

1.10.3 Graphic of Wave Diagnosis data

1. Press soft key **[W.GRPH]**, then graph of waveform diagnosis is displayed.

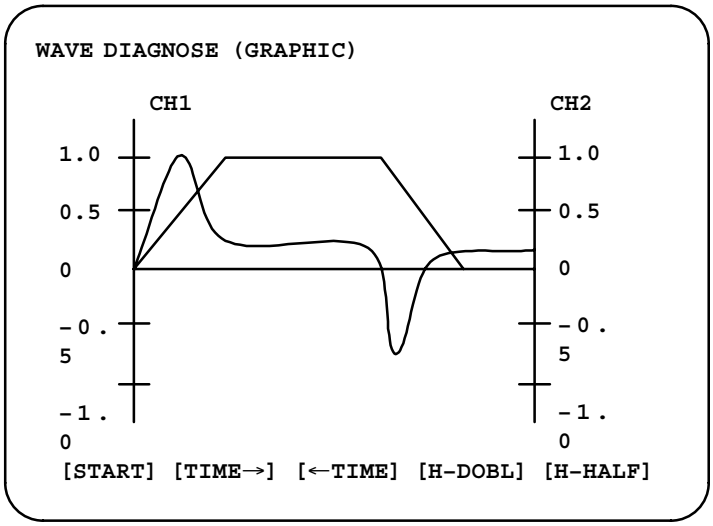

2. Press soft key **[(OPRT)]**, then the following soft keys are displayed. The following three sets of soft keys are displayed by the ▷ key.

[START] [TIME→] [←TIME] [H–DOBL] [H–DOBL]

[START] [CH–1↑] [CH–1↓] [V–DOBL] [V–HALF]

[START] [CH–2↑] [CH–2↓] [V–DOBL] [V–HALF]

1) **[START]** : Starts Graphic data
2) **[TIME→]** : Shift the waveform of channel 1 and 2 rightward
3) **[←TIME]** : Shift the waveform of channel and 2 leftward
4) **[H–DOBL]** : Double the time scale of the waveform of channel 1 and 2
5) **[H–HALF]** : Half the time scale of the waveform of channel 1 and 2
6) **[H–DOBL]** : Double the height of waveform of channel 1 and 2
7) **[V–HALF]** : Half the height of waveform of channel 1 and 2
8) **[CH–1↑]** : Shift the zero point of channel 1 upward
9) **[CH–1↓]** : Shift the zero point of channel 1 downward
10) **[CH–2↑]** : Shift the zero point of channel 2 upward
11) **[CH–2↓]** : Shift the zero point of channel 2 downward

- **Drawing a waveform for one–shot type waveform diagnosis**

The one–shot type waveform diagnosis function draws a waveform for a specified data item in real time as the data is sampled. The sampled data, however, is not stored and thus cannot be output later.

To sample data for one–shot type waveform diagnosis, press the **[START]** key on the WAVE DIAGNOS. (GRAPHIC) screen. Then, data is sampled when the specified start condition is satisfied. Data sampling continues for the specified period.

Pressing the [**SATART**] soft key starts data sampling. While sampling is being performed, SAMPLING blinks at the top of the screen. Once data sampling has been completed, a waveform is automatically displayed.

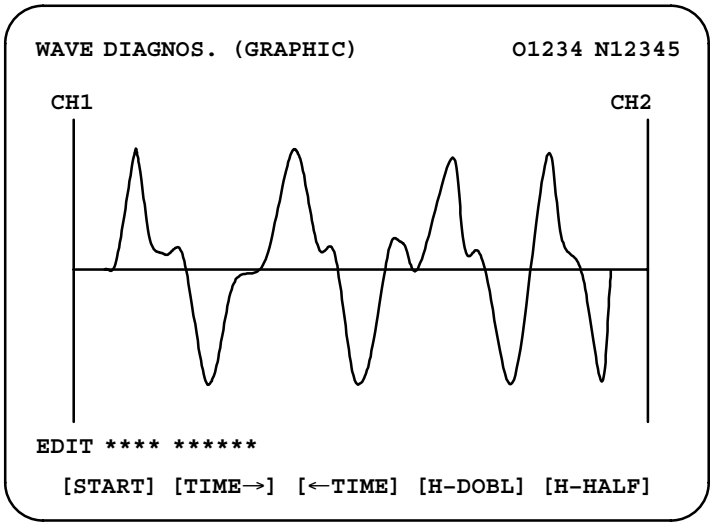

- **Drawing a waveform for storage type waveform diagnosis**

To use storage type waveform diagnosis, set 100 for the display start condition. The maximum data width for storage type waveform diagnosis is 32760 ms. Data must be sampled before starting drawing. The next page explains sampling in detail.

Pressing the **[START]** soft key loads stored data. While the data is being loaded, SAMPLING blinks at the top of the screen. Once the data has been loaded, a waveform is displayed. The date on which the data was stored is displayed at the top left of the screen. If the **[START]** soft key is pressed while data is being stored, storage is stopped and the waveform for the data stored up to that point is displayed. The WAVE DIAGNOS. (MEMORY) screen indicates whether data is being stored.

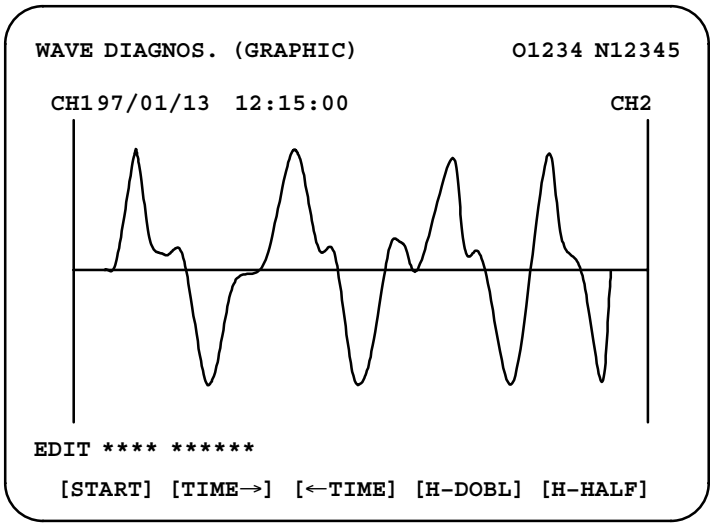

1.10.4 Data Sampling for Storage Type Waveform Diagnosis

(1) Press the SYSTEM function key. Pressing the menu continuation key [▷] displays the **[W.DGNS]** soft key. Press this soft key to display the WAVE DIAGNOS. (PARAMETER) screen.

(2) Press the **[W.MEM]** soft key to display the WAVE DIAGNOS. (MEMORY) screen. The operation selection soft keys appear.
The configuration of the operation selection soft keys is as follows:

```
WAVE DIAGNOS. (MEMORY)           O1234 N12345

   CONDITION:  100     TRIGGER:  G0123.4

   DATA KINDS          SAMPLING AXIS
   POS ERROR           XYZABCUV
   MOTION CMD          XYZABCUV
   CURRENT (%)         XYZABCUV
   SPEED (RPM)         NONE
   TORQUE CMD          NONE
   HEAT SIMLT          XYZABCUV
                SMPL   TIME :      2. 0SEC
                DATE     : MEMORY

EDIT **** *** ***          08:20:52
  [SELECT] [      ] [      ] [      ] [START]
```

(3) The configuration of the operation selection soft keys is as follows:

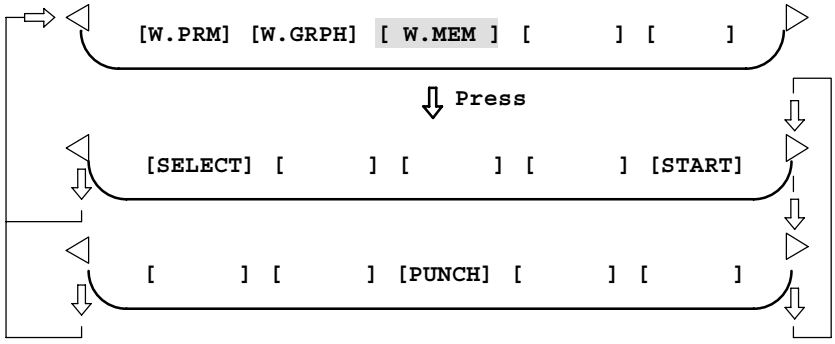

Fig. 1.10.4 Soft keys

(4) Using the cursor, set the necessary data items. To set the sampling axes, position the cursor to the data item to be set, enter the names of the axes for which data will be sampled for that data item, then press **[SELECT]** or INPUT. The axis names are displayed to the right of the data items.

Example) XYZ + **[SELECT]** or INPUT

Once the sampling axes have been selected, the sampling period for each axis is displayed. Subsequently pressing the **[START]** soft key starts data sampling.

CAUTION
1 Data items for which ***** is displayed cannot be set.
2 To change the sampling axes, enter new axis names then press the [SELECT] soft key. Pressing the [SLELCT] soft key without entering an axis name results in no sampling axis being set.
3 If the sampling axes are changed during data sampling, data sampling is stopped. In this case, press the [START] soft key to restart data sampling for the new sampling axes.
4 Initially, no sampling axis is set.
5 When the sixth–type sampling data is spindle load meter data (parameter No. 3121 = 1), set the axis name S.

- **Storage data parameters**

(1) Storage stop condition

100: Stops data storage upon the issue of a servo alarm.

101: Stops data storage upon the issue of a servo alarm or the detection of the rising edge of the trigger signal.

102: Stops data storage upon the issue of a servo alarm or the detection of the falling edge of the trigger signal.

The maximum stored data width is 32760 ms. If the storage stop condition is not satisfied within 32760 ms, data is overwritten, starting with the oldest data.

Parameter No. 3120 can be used to delay data storage being stopped by a specified period (ms), after the issue of a servo alarm.

(2) Trigger: Set the PMC address and bit for the signal used to trigger the stopping of data storage, when 101 or 102 is set for the stop condition.

Example) G0007.2: ST signal

(3) Data type: The following table lists the types of data for which a waveform can be displayed.

Data type	Description	Units
POS ERROR	Servo error (8 ms) for the n–th axis	Pulses (detection units)
MOTION CMD	Pulse distribution for the n–th axis	Pulses (input increments)
CURRENT (%)	Torque for the n–th axis	% (relative to maximum current)
SPEED (RPM)	Actual speed for the n–th axis	min^{-1}
TORQUE CMD	Command current for the n–th axis	% (relative to maximum current)
HEAT SIMLT	Thermal simulation data for the n–th axis (when the parameter No.3121 is set to 0.)	% (OVC alarm ratio)
LOAD METER	Load meter for the n–th spindle (when the parameter No.3121 is set to 1.)	% (relative to maximum output)

NOTE
With parameter No. 3121, choose whether the sixth–type sampling data is thermal simulation data or spindle load meter data. When spindle load meter is selected, the spindle data of the first axis is stored with each path.

(4) Sampling axis: The axes along which data will be sampled are displayed.

(5) Sampling period: The sampling period for each axis is displayed.

(6) Date of storage: While data is being sampled, MEMORY blinks in this field. When data sampling stops, the date at that point appears in this field.

1.10.5 Outputting Waveform Diagnosis Data (Storage Type)

Waveform diagnosis data of servo alarm format can be output to an I/O device, as follows:

1) Select EDIT mode.
2) Press the SYSTEM key, then display the WAVE DIAGNOS. (MEMORY) screen.
3) Press the **[W.MEM]**, ▷ , **[PUNCH]**, and **[EXEC]** soft keys, in this order.

For details of input/output to/from the FANUC Floppy Cassette or FA Card, see “Output to FANUC Floppy Cassette or FA Card,” below.

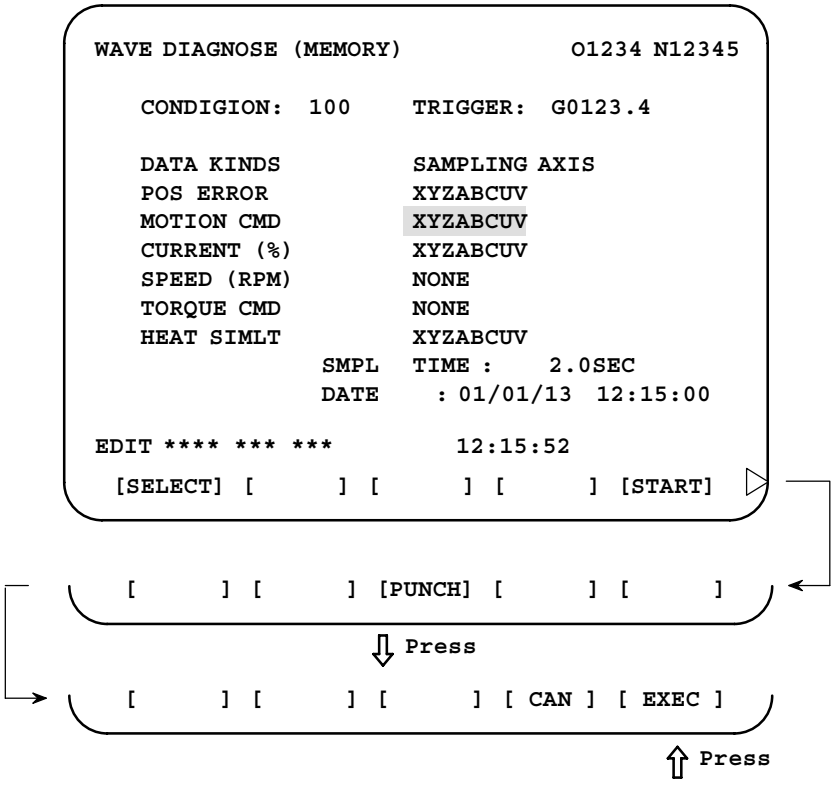

- **Output to FANUC Floppy Cassette or FA Card**

1) Select EDIT mode.
2) Press the [SYSTEM] key, then display the WAVE DIAGNOS. (MEMORY) screen.
3) Open the write protect tab on the floppy disk or card.
4) Press the **[W.MEM]**, ▷ , **[PUNCH]**, and **[EXEC]** soft keys, in this order.

   The waveform diagnosis data is output to a file named WAVE DIAGNOS, to which the number of the last file is assigned.

If a file named WAVE DIAGNOS already exists in the floppy disk or on the card, P/S alarm 86 is issued. A floppy disk or card can contain only one file for waveform diagnosis data. If the existing WAVE DIAGNOS file contains unnecessary waveform diagnosis data of servo alarm format, delete that file before attempting to output new data. The procedure for deleting a file is described later.

- **Directory display**

The directory in the cassette or card is displayed by means of the following procedure:

1) Select EDIT mode.
2) Press the [PROG] function key to select the program screen.
3) Press the continuous menu key [▷], then press [FLOPPY].
4) Press page key [PAGE ↓].

The directory is displayed.

- **Deleting a file**

A file stored on a cassette or card is deleted by means of the following procedure:

1) Select EDIT mode.
2) Press the [PROG] function key to select the program screen.
3) Set the write protect switch on the cassette or card to enable writing.
4) Press [FLOPPY].
5) Press [DELETE].
6) Enter the file number, then press [F SET].
7) Press [EXEC].
   The file corresponding to the specified file number is deleted. The number of each file subsequent to the deleted file is decremented by one.

- **Output format**

In the servo alarm format, the header, date and time, selected axes, and waveform diagnosis data are output in this order. Data items are identified by ten identifier words. Output data other than the identifier words varies with the data type.

T(identifier word)

T0 : Header
T60 : Positional deviation
T61 : Move command
T62 : Actual current
T63 : Actual speed
T64 : Command current
T65 : Thermal simulation
T66 : Load meter for the spindle
T68 : Selected axes
T69 : Date and time

1) Header

T	0	C	W	A	V	E		D	I	A	G	N	O	S	;

C: Data word

2) Data word

T	6	9	D	*	*	*	*	*	*	,	*	*	*	*	*	*	;

D*..*: Data Example: 12:14 59 seconds on June 23, 2001

T	6	9	D	2	0	0	1	0	6	2	3	,	1	2	1	4	5	9	;

3) Selected axes

T	6	8	P	*	*	D	*	*	,	*	*	,		to		*	*	,	

P0: Positional deviation
P1: Actual speed
P2: Move command
P3: Command current
P4: Actual current
P5: Thermal simulation
D*.. *: Axis number (1 to 8)

4) Waveform diagnosis data

T	6	0	D	*	*	,	*	*	,	*	*	,	to	*	*	,	
T	6	1	D	*	*	,	*	*	,	*	*	,	to	*	*	,	
T	6	2	D	*	*	,	*	*	,	*	*	,	to	*	*	,	
T	6	3	D	*	*	,	*	*	,	*	*	,	to	*	*	,	
T	6	4	D	*	*	,	*	*	,	*	*	,	to	*	*	,	
T	6	5	D	*	*	,	*	*	,	*	*	,	to	*	*	,	
T	6	6	D	*	*	,	*	*	,	*	*	,	to	*	*	,	

D *..*: Waveform diagnosis data x number of axes

NOTE
1 Records are classified into header records and data records.
2 “%” is used as an end–of–record code.
3 Each record starts with an identifier and ends with an end–of–block code.
4 Either the ISO or EIA code system is used.
5 The output code type is specified with parameter ISO (bit 1 of No. 0100). For ISO code, parameter NCR (bit 3 of No. 0100) is used to specify whether the end–of–block code is <LF> only, or a sequence of <LF> <CR> <CR>.
6 Parameter NFD (bit 7 of No. 01X1, where X is the channel number) is used to specify whether a feed code is output before and after the data.
7 No identifier word is output for a data item for which no axis is selected.
8 The above file corresponds to a paper tape of about 200 m in length.

1.10.6 Notes

(1) Once the storage is full, the oldest data is overwritten.

(2) Stored–type waveform diagnostic data is not lost, even when the power is turned off.

(3) The waveform diagnostic function is disabled when parameter SGD (bit 0 of No. 3112) is set to 0.

(4) Set the correct date and time using the setting screen.

1.11 OPERATING MONITOR

Load meter of the servo axis and the serial spindle and the speed meter can be displayed.

1.11.1 Display Method

1. Set a parameter to display operating monitor. (Bit 5 (OPM) of parameter No.3111)
2. Press the [POS] key to display the position display screen.
3. Press continuous menu key [▷], then soft key **[MONI]** is displayed.
4. Press the soft key **[MONI]**, then the operating monitor screen is displayed.

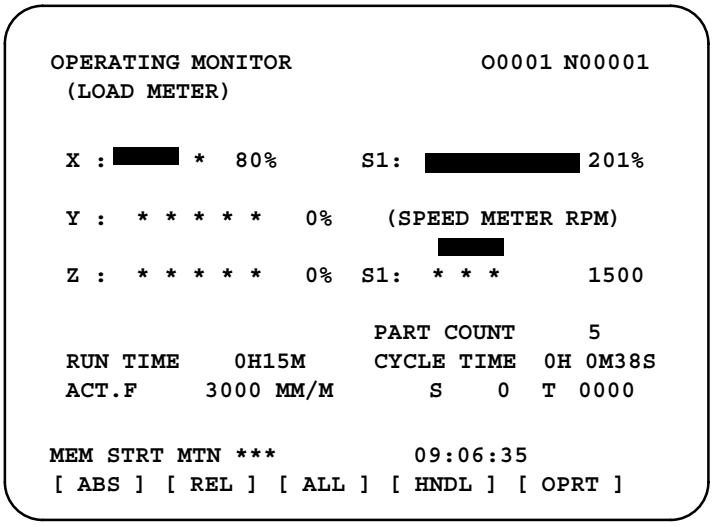

CAUTION

1 The bar graph for the load meter shows load up to 200%.
2 The bar graph for the speed meter shows the ratio of the current spindle speed to the maximum spindle speed (100%). Although the speed meter normally indicates the speed of the spindle motor, it can also be used to indicate the speed of the spindle by setting bit 6. (OPS) of parameter 3111 to 1.
3 The servo axes for their load meters are displayed are set to parameter No. 3151 to 3. If parameters 3151 to 3153 are all zero, the load meter of the basic axes are displayed.
4 For color display, the bar of the load meter that exceed 100% shows purple color.

1.11.2 Parameters

		#7	#6	#5	#4	#3	#2	#1	#0
DGN	3111		OPS	OPM					

[Data type] Bit

OPM Operating monitor display is:

0 : Disabled
1 : Enabled

OPS The speed meter on the operating monitor screen displays:

0 : Spindle motor speed
1 : Spindle speed

DGN	3151	Axis number for which the first servo motor load meter is displayed
DGN	3152	Axis number for which the second servo motor load meter is displayed
DGN	3153	Axis number for which the third servo motor load meter is displayed
DGN	3154	Axis number for which the fourth servo motor load meter is displayed
DGN	3155	Axis number for which the fifth servo motor load meter is displayed
DGN	3156	Axis number for which the sixth servo motor load meter is displayed
DGN	3157	Axis number for which the seventh servo motor load meter is displayed
DGN	3158	Axis number for which the eighth servo motor load meter is displayed

[Data type] Byte

[Valid data range] 0, 1, ... number of controlled axes

These parameters specify the numbers of the axes for which load meters for servo motors are to be displayed. Up to eight load meters can be displayed. Set 0 for those axes for which no load meter is to be displayed.

1.12 LIST OF OPERATIONS

Reset

Function	Data protection key	Parameter write=1	Mode	Function button	Operation
Resetting run hour			–	POS	[(OPRT)] [RUNPRE]→[EXEC]
Resetting no. of machined parts			–	POS	[(OPRT)] [PTSPRE]→[EXEC]
Resetting OT alarm			At Power ON	–	P and CAN
Resetting alarm 100			–	–	CAN and RESET

Registration from MDI

Function	Data protection key	Parameter write=1	Mode	Function button	Operation
Inputting parameters		○	MDI or E.Stop	SYSTEM (PARAM)	Parameter no.→[NO.SRH]→Data→ INPUT → PWE =0 → RESET
Inputting offset values	OFF		–	OFFSET SETTING	Offset number→[NO.SRH]→Offset value→ INPUT
Inputting setting data	OFF		MDI	OFFSET SETTING	Setting no.→[NO.SRH]Data→ INPUT
Input of PMC parameters, counter and data table	OFF or ○		MDI or E.Stop	SYSTEM (PMC)	[PMCPRM]→[COUNTR] or [DATA]→Data→ INPUT
Inputting PMC parameters (Timer, keep relay)		○			[PMCPRM]→[TIMER] or [KEEPRL]→Data→ INPUT
Tool length measurement			JOG	POS → OFFSET SETTING	POS (Display of relative coordinate)<AXIS>→ [ORIGIN] → OFFSET SETTING →Jog the tool to measuring position Offset no.→[NO.SRH]→<AXIS>→[INP.C]

Input/Output with FANUC Cassette

Function	Data protection key	Parameter write=1	Mode	Function button	Operation
Heading a file			EDIT	PROG	N →File no.→[▶]→[F SRH]→[EXEC]
Deleting a file	OFF		EDIT	PROG	N →File no.→[▶]→[DELETE→[EXEC]
Collating a program			EDIT	PROG	Heading a file→ O →Program number→[(OPRT)] →[▶]→[READ]→[EXEC]

Inputting From FANUC Cassette

Function	Data protection key	Parameter write=1	Mode	Function button	Operation
Inputting parameters		○	EDIT or E.Stop	SYSTEM (PARAM)	[(OPRT)]→[▶]→[READ]→[EXEC]
Inputting PMC parameters		○	E.Stop	SYSTEM (PMC)	[▶]→[I/O]→(CANNEL NO) 1 INPUT → (DEVICE NAME) [FDCAS]→(KIND OF DATA) [PARAM]→[READ]→(FILE NO) File no. INPUT →[EXEC]
Inputting offset values	OFF		EDIT	OFFSET SETTING	(Heading a file no.)→[(OPRT)]→[▶]→[READ]→[EXEC]
Registering a program	OFF		EDIT	PROG	N →File no.→ INPUT →[▶]→[READ]→[EXEC]
Inputting macro variables	OFF		EDIT	PROG	N →File no.→ INPUT →[▶]→ O → Program no. → [READ]→[EXEC]
			MEMORY	PROG	<START>

Output to FANUC Cassette

Function	Data protection key	Parameter write=1	Mode	Function button	Operation
Output of parameter			EDIT or Emergency Stop	SYSTEM (PARAM)	[(OPRT)]→[▶]→[PUNCH]→[EXEC]
Output of PMC parameter			EDIT	SYSTEM (PMC)	[▶]→[I/O]→(CANNEL NO) 1 INPUT →(DEVICE NAME) [FDCAS] →(KIND OF DATA) [PARAM] → [WRITE] → (FILE NO) – 1 INPUT →[EXEC]
Output of offset			EDIT	OFFSET SETTING	[(OPRT)]→[▶]→[PUNCH]→[EXEC]
Output of all programs			EDIT	PROG	O →–9999→[▶]→[PUNCH]→[EXEC]
Output of one program			EDIT	PROG	O →Program no.→[▶]→[PUNCH]→[EXEC]
Output of macro variables			EDIT	OFFSET SETTING	[▶]→[MACRO]→[(OPRT)]→[▶]→[PUNCH]→[EXEC]

Search

Function	Data protection key	Parameter write=1	Mode	Function button	Operation
Searching a program number			MEMORY or EDIT	PROG	O →Program no.→[O SRH]
Searching a sequence number			MEMORY	PROG	Program no. search→ N →Sequence number→[NSRH]
Searching an address word			EDIT	PROG	Data to be searched→[SRH↑] or[SRH↓] or ↑ ↓ (cursor key)
Searching an address only			EDIT	PROG	Address to be searched [SRH↑] or[SRH↓] or ↑ ↓ (Cursor key)
Searching an offset number			–	OFFSET SETTING	Offset no.→[NO.SRH]
Searching a diagnostic number			–	SYSTEM (DGNOS)	Diagnostic number→[NO.SRH]
Searching a parameter number			–	SYSTEM (PARAM)	Parameter no.→[NO.SRH]

Edit

Function	Data protection key	Parameter write=1	Mode	Function button	Operation
Display of memory capacity used			EDIT	PROG	[LIB]
Deleting all programs	OFF		EDIT	PROG	O →–9999→ DELETE
Deleting a program	OFF		EDIT	PROG	O →Program no.→ DELETE
Deleting several blocks	OFF		EDIT	PROG	N →Sequence no.→ DELETE (Deleted up to a block with a specified sequence no.)
Deleting a block	OFF		EDIT	PROG	EOB → DELETE
Deleting a word	OFF		EDIT	PROG	Searching a word to be deleted→ DELETE
Changing a word	OFF		EDIT	PROG	Searching a word to be changed→New Data→ ALTER
Inserting a word	OFF		EDIT	PROG	Searching a word immediately before a word to be searched→New Data→ INSERT

Collation

Function	Data protection key	Parameter write=1	Mode	Function button	Operation
Collating memory	ON		EDIT	PROG	[(OPRT)]→[▶]→[READ]→[EXEC]

Playback

Function	Data protection key	Parameter write=1	Mode	Function button	Operation
Input of NC data			TEACH –IN JOG/ HAN- DLE	PROG	Jog the machine→ X , Y or Z → INSERT → NC data → INSERT → EOB → INSERT

Clear

Function	Data protection key	Parameter write=1	Mode	Function key	Operation
Memory all clear			At power ON		M/T : [RESET] AND [DELETE] On 2path are controlled
					On 2path are controlled Path1 : [CAN] AND [1] Path2 : [CAN] AND [2]
					Loader is controlled : [CAN] AND [5]
Parameter/offset clear		○	At Power ON		M/T : [RESET]
					On 2path are controlled Path1 : [RESET] AND [1] Path2 : [RESET] AND [2]
					Loader is controlled : [RESET] AND [5] (Parameter only)
Clearing a program		○	At Power ON		M/T : [DELETE]
					On 2path are controlled Path1 : [DELETE] AND [1] Path2 : [DELETE] AND [2]
					Loader is controlled : [RESET] AND [5]
Program under edition at power off(PS101)			–		[PROG] AND [RESET]
PMC RAM *			At Power ON		Main CPU : [X] AND [0] (O)
					Loader is controlled : [X] AND [5]
Additional SRAM area clear			At Power ON		M/T : [O] (O) AND [DELETE]
					On 2path are controlled Path1 : [O] (O) AND [1] Path2 : [O] (O) AND [2]

* PMC ladder program is not cleard in FROM.

Manual operation

Function	KEY SW	PWE =1	Mode	Func-tion key	Operation
Manual refer-ence point return			JOG		Turn on Reference point return switch → Turn on +X, –X, +Z, or –Z → Reference point return switch LED lit.
Jog feed			JOG		Turn on +X, –X, +Z, or –Z → Use JOG FEEDRATE to set jog feedrate → Press Rapid traverse button, if required.
Incremental feed			INC		Use Move distance selection switch to select move distance → Turn on +X, –X, +Z, or –Z → Press Rapid traverse button, if required.
Manual handle feed			HND		Use Axis selection switch to select axis to be operated → Use Handle magnification selection to select magnification → Turn manual pulse generator.

Display

Function	KEY SW	PWE =1	Mode	Func-tion key	Operation
Amount of program memory in use			EDIT	PROG	[DIR]
Command value display			MEM or MDI	PROG	Command value being executed, and previously specified modal value
					[CURRNT]
					Command value being executed, and next command value to be executed
					[NEXT]
					Command value entered from MDI, and previously specified modal value
					[MDI]
					Program in memory being executed
					[PRGRM]
					Executable blocks in memory and current position
					[CHECK]
Current–position display				POS	Representation of the position in the workpiece coordinate system
					[ABS]
					Representation of the position in the relative coordinate system
					[REL]
					General position indication
					[ALL]
Alarm display			—	MESSAGE	[ALARM] when an alarm condition has occurred.

Function	KEY SW	PWE =1	Mode	Func-tion key	Operation
Alarm history display				MESSAGE	[HISTRY]
Screen erase			—	—	Press the CAN and function keys simultaneously. The function key causes re–display.
Screen switching between NC and loader					SHIFT and HELP

Graphics functions (T series)

Function	KEY SW	PWE =1	Mode	Func-tion key	Operation
Parameter setting				GRAPH	[G.PRM]
Tool path drawing				GRAPH	Select a graphics drawing screen.
					[GRAPH]
					Begins and ends drawing.
					During automatic operation or manual operation
					Erase a drawing screen.
					[(OPRT)] → [ERASE]
					Enlarge graphics.
					[ZOOM]

NOTE
For the small–size MDI, read the GRAPH function key in this table as the CUSTOM GRAPH function key.

Graphics function (M series)

Function	KEY SW	PWE =1	Mode	Func-tion key	Operation
Parameter setting				GRAPH	[PARAM]
Tool path drawing				GRAPH	Select a graphics drawing screen.
					[GRAPH]
					Begin and end drawing.
					During automatic operation or manual operation

Function	KEY SW	PWE =1	Mode	Function key	Operation	
Tool path diagram data setting				GRAPH	Press the GRAPH key several times → Display “PATH GRAPHIC (PARAMETER)” screen → [PARAM] → Enter numerals using numeric keys → INPUT	
Tool path drawing			MEM	GRAPH	Press the GRAPH key several times → Display “PATH GRAPHIC (PARAMETER)” screen → [EXEC] → [(OPRT)] → [AUTO] or [START]	
					Suspend drawing	
					[STOP]	
					Suspend drawing	Execute.
						[START]
						Draw starting at the top of the program.
						[REWIND] → [START]
Enlarging part of the tool path drawing				GRAPH	Press the GRAPH key several times → Display “PATH GRAPHIC (PARAMETER)” screen → [SCALE] → [(OPRT)][←][→][↓][↑] → P c or M # → [EXEC]	
Current–tool position mark display				GRAPH	Press the GRAPH key several times → Display “SOLID GRAPHIC (PARAMETER)” screen → [POS]	
Machining profile drawing data setting				GRAPH	Press the GRAPH key several times → “SOLID GRAPHIC (PARAMETER)” screen → Enter numerals using numeric keys → INPUT	
Blank figure drawing				GRAPH	Press the GRAPH key several times → “SOLID GRAPHIC (PARAMETER)” screen → [BLANK] → [(OPRT)] → [ANEW] → [+ ROT][– ROT][+TILT][–TILT]	
Machining profile drawing			MEM	GRAPH	Press the GRAPH key several times → “SOLID GRAPHIC (PARAMETER)” screen → [EXEC] → [(OPRT)] → [A.ST] or [F.ST]	
					Suspend drawing	
					[STOP]	
					After drawing is suspended	Execute.
						[A.ST] or [F.ST]
						Display the start of part program.
						[REWIND] → [A.ST] or [F.ST]

Function	KEY SW	PWE =1	Mode	Function key	Operation
Re–drawing of “SOLID GRAPHIC (PARAMETER)” in a different orientation				GRAPH	Press the GRAPH key several times → “SOLID GRAPHIC (PARAMETER)” screen → [REVIEW] → [(OPRT)] → [ANEW] → [+ ROT][– ROT][+TILT][–TILT]
3–plane drawing				GRAPH	Press the GRAPH key several times → “SOLID GRAPHIC (PARAMETER)” screen → [▶] → [3–PLN] → [(OPRT)] → [↺] [←][→][↑][↓]

NOTE
For the small–size MDI, read the GRAPH function key in this table as the CUSTOM GRAPH function key.

Help function

Function	KEY SW	PWE =1	Mode	Function key	Operation
Initial menu screen display				HELP	HELP
Alarm detail screen display				HELP	[ALARM] → Alarm No. → [SELECT]
Operation method screen display				HELP	[OPERAT] → Operation method item No. → [SELECT]
Parameter table–of–contents screen display				HELP	[PARAM]

Self–diagnosis function

Function	KEY SW	PWE =1	Mode	Function key	Operation
Self–diagnosis screen display				SYSTEM	[DGNOS] ↓ 1. PAGE ↓ PAGE ↑ page switch keys 2. Diagnosis data No. → [NO.SRH]

Boot

Function	KEY SW	PWE =1	Mode	Function key	Operation
System monitor screen display			Power–on time	—	▷ and a soft key at its left
Reading file from memory card					Place the cursor at 1. SYSTEM DATA LOADING on the system monitor screen → [SELECT] → Place the cursor at the target file → [SELECT] → [YES]
Listing files in flash ROM and displaying detail screen					Place the cursor at 2. SYSTEM DATA CHECK on the system monitor screen → [SELECT] → Place the cursor at the target item → [SELECT]
Deleting file from flash ROM					Place the cursor at 3. SYSTEM DATA DELETE on the system monitor screen → [SELECT] → Place the cursor at the target file → [SELECT] → [YES]
Outputting file from flash ROM to memory card					Place the cursor at 4. SYSTEM DATA SAVE on the system monitor screen → [SELECT] → Place the cursor at the target file → [SELECT] → [YES]
Transferring contents between SRAM and memory card in batch					Place the cursor at 5. SRAM DATA BACKUP on the system monitor screen → [SELECT] – Batch output to memory card Place the cursor at 1. SRAM BACK UP → [SELECT] → [YES] – Batch input from memory card Place the cursor at 2. RESTORE SRAM → [SELECT] → [YES]
Deleting file from memory card					Place the cursor at 6. MEMORY CARD FILE DELETE on the system monitor screen → [SELECT] → Place the cursor at the target file → [SELECT] → [YES]
Memory card formatting					Place the cursor at 7. MEMORY CARD FORMAT on the system monitor screen → [SELECT] → [YES]
Exiting system monitor					Place the cursor at 10. END on the system monitor screen → [SELECT] → [YES]

Reference

If no soft key is available as with a touch panel, use the numeric keys on the MDI keypad.

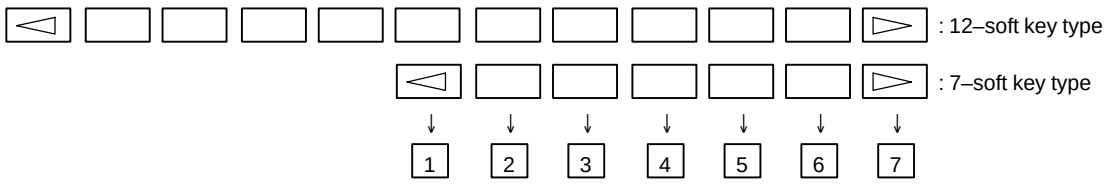

1.13 WARNING SCREEN DISPLAYED WHEN AN OPTION IS CHANGED

- **Warning screen**

This CNC displays a warning screen when the configuration of the options using the SRAM area is changed. The data for the function indicated on the screen is cleared the next time the system is turned on.

```
   WARNING

YOU SET THE PARAMETER NO.□□□□#□

THE FOLLOWING DATA WILL BE CLEARED.

* PART PROGRAM MEMORY

PLEASE PRESS <DELETE> OR <CAN> KEY.
<DELETE> : CLEAR ALL DATA
<CAN>    : CANCEL
```

NOTE
Mark* varies with the parameter settings. Two or more function names may be displayed.

- **Allocation error screen**

When an option which uses the SRAM area is added, the system software may require more SRAM than is currently installed in the system. In this case, an allocation error screen appears the first time the system is turned on after the addition of the option, thus restoring the state existing before the addition.

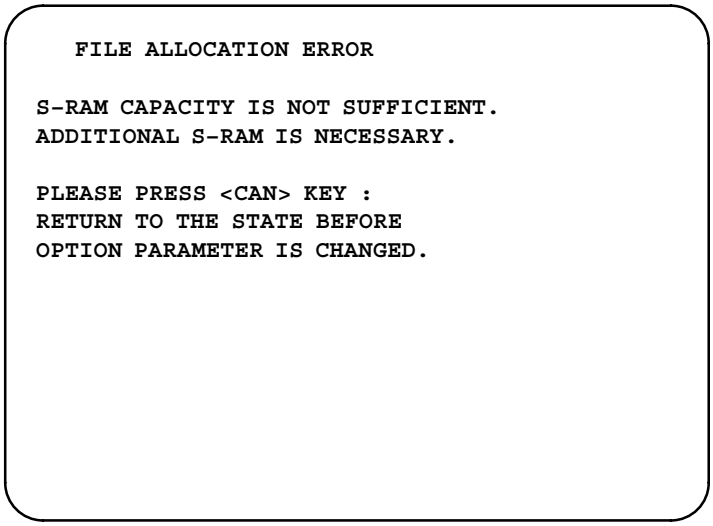

NOTE
When replacing SRAM, perform all memory clear.

(RESET + DELETE)

1.14 WARNING SCREEN DISPLAYED WHEN SYSTEM SOFTWARE IS REPLACED (SYSTEM LABEL CHECK ERROR)

When an attempt is made to turn on the power to the CNC after replacing the system software, the screen shown below is displayed, and the system is not started if the replacing new system software is not compatible with the replaced system software.

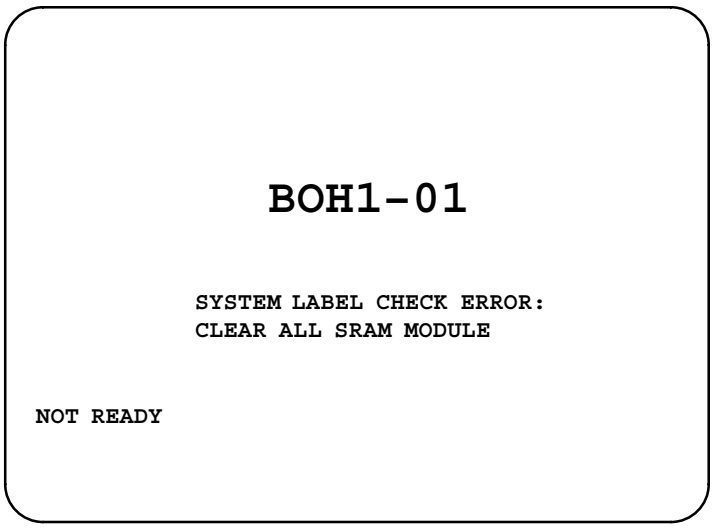

In this case, perform memory all clear (by holding down the RESET and DELETE MDI keys then turning on the power) or reinstall the original system software.

1.15 MAINTENANCE INFORMATION SCREEN

The maintenance information screen is provided to record the history of maintenance performed by a service person of FANUC or machine tool builder.
The screen has the following features:

- MDI alphabetical input is allowed.
- The recording screen can be scrolled in units of lines.
- Edited maintenance information can be read and punched.
- The screen can be saved in flash ROM.

1.15.1 Screen Display and Operation

- **Screen display**

1. Press the [SYSTEM] function key.
2. Press the continuous menu key [▷] several times. **[M–INFO]** soft key appears.
3. Press the **[M–INFO]** soft key. The maintenance information screen appears.

When selected, the maintenance screen shows the latest information.

The recording screen has an input area of 40 characters by 11 lines.

The status (mode, number of empty character spaces, cursor line, column number) is displayed at the bottom of the screen.

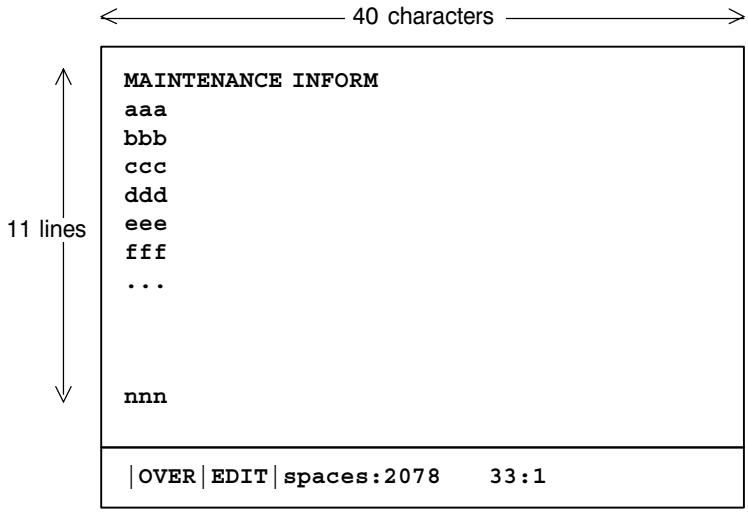

Status display

- OVER/INSERT : - - OVER : Overwrite mode ; INSERT: Insert mode
- EDIT/VIEW : - - - EDIT : Editing allowed ; VIEW : Editing inhibited
- Number of empty character spaces
- Current cursor line
- Current cursor column

● Screen operation

The maintenance information screen has view mode and edit mode, which are selected by pressing the **[END]** or **[EDIT]** soft key.
Initially, view mode is selected. To start editing, select edit mode by pressing the [(OPRT)] and **[EDIT]** keys. When the editing is completed, press the **[END]** key. Then, select **[STORE]** or **[IGNORE]**. Unless **[STORE]** is selected, the edited data will be lost at next power–up.
To scroll the screen showing the recorded information, press a cursor key or page key on the MDI panel.
The following keys are used for editing (character input) and viewing:

Operation table

Mode	Key	Description
View	Soft keys [EDIT] [JUMP]	Allows editing. Displays the beginning or the end.
	Cursor key	Scrolls the screen up or down.
	Page key	Scrolls the screen up or down in units of whole screens.
Edit	Soft keys	
	[END]	Ends editing. Select whether to store the edited data.
	[ALLDEL]	Clears all maintenance information. (This key is enabled when the MDC bit (bit 3 of parameter 3118) is set to 1.)
	[I/O]	Reads or punches the maintenance information.
	[JUMP]	Moves the cursor to the beginning or end.
	Cursor key	Moves the cursor position up or down.
	Page key	Scrolls the screen up or down in units of whole screens.
	Alphanumeric/special character keys	Allows alphabetical, numeric, or special character input.
	INSERT key	Selects either insert mode or overwrite mode.
	DELETE key	Deletes a single character.
	CAN key	Deletes a single character before the cursor position.
	INPUT key	Starts a new line.

Operation of the soft keys

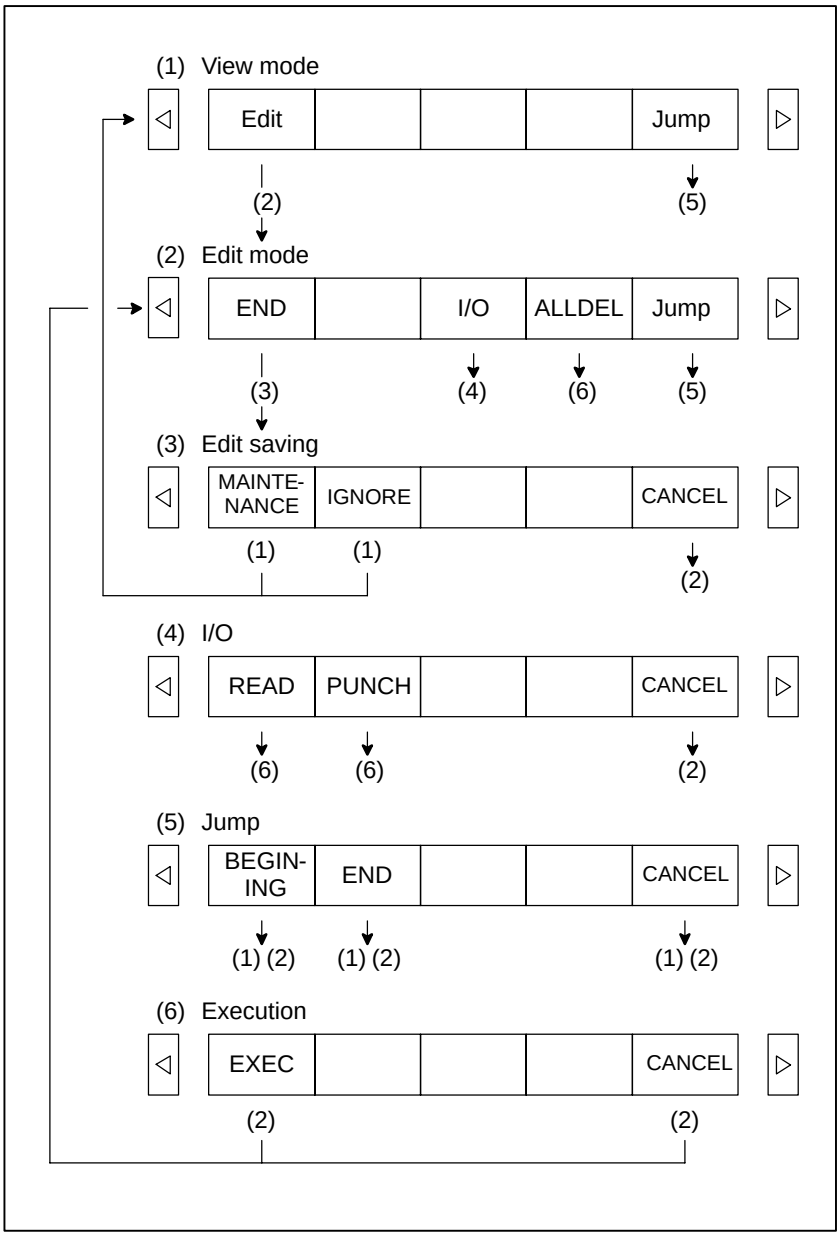

1.15.2 Maintenance Information Input/Output

The maintenance information can be read and punched.
When the maintenance information is input from or output to a memory card, a file name MAINTINF.DAT is used.

(1) Format

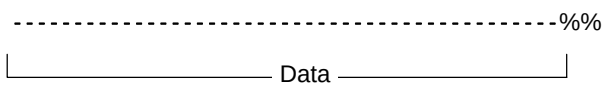

(2) Reading

When a MAINTINF.DAT file generated in the format shown above is read, the data is added at the end of the existing maintenance information.

NOTE
1 A TAB code is converted to one to four blanks, depending on the input position.
2 80h to 90h and E0h to EBh are assumed as prefix codes of double–byte characters. Reading these codes alone is inhibited.
3 Control codes (00H to 1FH) except TAB and LF are discarded in reading.
4 %% cannot be input.

(3) Punching

All maintenance information is output in the format shown above.

1.16 COLOR SETTING SCREEN

When VGA screen display is selected (NVG bit (bit 7 of parameter 3119) is set to 0), the color scheme of the VGA screen can be set on the color setting screen.

1.16.1 Screen Display

1. Press the [SYSTEM] function key.
2. Press the continuous menu key [▷] several times. The **[COLOR]** soft key appears.
3. Press the **[COLOR]** soft key. The color setting screen appears.

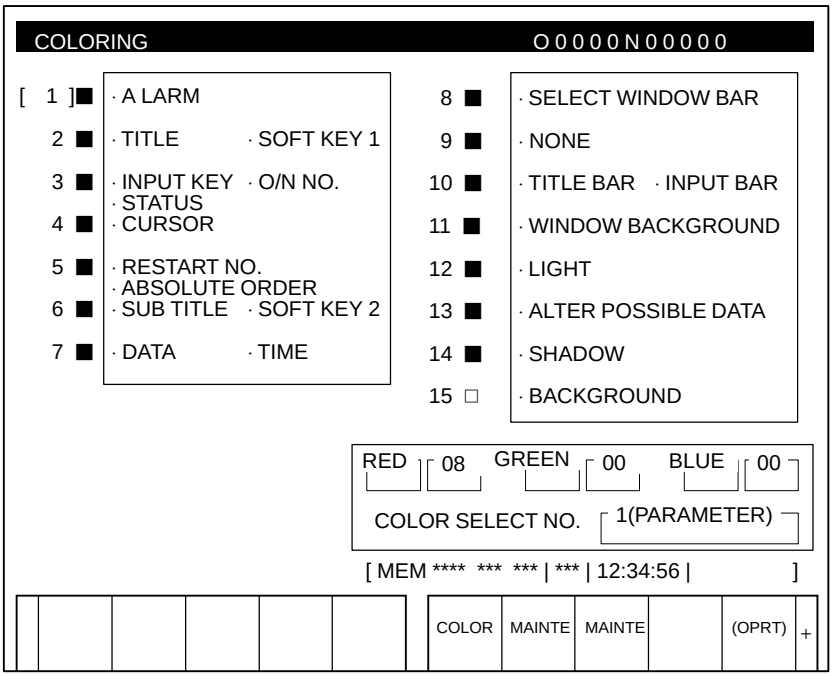

1.16.2 Color Setting

- **Changing a color (color palette value)**

1. Press the [(OPRT)] soft key. The following operation soft keys appear.

2. Move the cursor to the color number corresponding to the color palette value to be changed.

   The current color palette values of individual color elements are displayed.
3. Select a desired color element by pressing the **[RED]**, **[GREEN]**, or **[BLUE]** operation soft key.

   Two or more color elements can be simultaneously selected.

   Each time the **[RED]**, **[GREEN**], or **[BLUE]** operation soft key is pressed, the selection is made or canceled.

   (If the **[RED]**, **[GREEN]**, and **[BLUE]** operation soft keys are not displayed, press the rightmost soft key.)

4. Press the **[LIGHT]** or **[DARK]** operation soft key to change the luminance of the selected color element.

- **Storing colors (color palette values)**

A specified color palette value can be stored.

	STORE	CALL	COLOR1	COLOR2	COLOR3	+

1. Select a desired storage area by pressing the **[COLOR1]**, **[COLOR2]**, or **[COLOR3]** operation soft key.

   (If the **[COLOR1]**, **[COLOR2]**, and **[COLOR3]** operation soft keys are not displayed, press the rightmost soft key.)

   COLOR1 — Standard color data parameters (6561 to 6595)
   COLOR2 ┐ Internal RAM
   COLOR3 ┘

2. Press the **[STORE]** operation soft key. The following operation soft keys appear.

				CAN	EXEC	+

3. To store the current color palette values in the selected area, press the **[EXEC]** operation soft key. To cancel the storage, press the **[CAN]** operation soft key or the leftmost key.

- **Calling colors (color palette values)**

	STORE	CALL	COLOR1	COLOR2	COLOR3	+

1. Select a color palette storage area by pressing the **[COLOR1]**, **[COLOR2]**, or **[COLOR3]** operation soft key.

   (If the **[COLOR1]**, **[COLOR2]**, and **[COLOR3]** operation soft keys are not displayed, press the rightmost soft key.)

2. Press the **[CALL]** operation soft key. The following operation soft keys appear.

				CAN	EXEC	+

3. To call the color palette values from the selected area, press the **[EXEC]** operation soft key. If no color palette value is stored, this step cannot be executed.

   To stop calling, press the **[CAN]** operation soft key or the leftmost key.

1.16.3 Parameters

	#7	#6	#5	#4	#3	#2	#1	#0
3119	NVG							

[Data type] Bit

NVG When a color display unit is used, the VGA screen display is:

0 : Selected.
1 : Not selected. (Conventional display)

6561	Standard color data of graphic color 1
6562	Standard color data of graphic color 2
6563	Standard color data of graphic color 3
6564	Standard color data of graphic color 4
6565	Standard color data of graphic color 5
6566	Standard color data of graphic color 6
6567	Standard color data of graphic color 7
6568	Standard color data of graphic color 8
6569	Standard color data of graphic color 9
6570	Standard color data of graphic color 10
6571	Standard color data of graphic color 11
6572	Standard color data of graphic color 12
6573	Standard color data of graphic color 13
6574	Standard color data of graphic color 14
6575	Standard color data of graphic color 15
6581	Standard color data of text color 1
6582	Standard color data of text color 2
6583	Standard color data of text color 3
6584	Standard color data of text color 4
6585	Standard color data of text color 5
6586	Standard color data of text color 6
6587	Standard color data of text color 7
6588	Standard color data of text color 8
6589	Standard color data of text color 9

6590	Standard color data of text color 10
6591	Standard color data of text color 11
6592	Standard color data of text color 12
6593	Standard color data of text color 13
6594	Standard color data of text color 14
6595	Standard color data of text color 15

[Data type] Two–word

[Unit of data] Six–digit number rrggbb (rr: Red component value, gg: Green component value, bb: Blue component value)
When five digits or less are specified, the missing high–order digits are assumed as zeros.

[Valid data range] Each color component value: 00 to 15 (Equivalent to the color level on the color setting screen)
When 16 or a higher value is specified, 15 is assumed.

(Example) When specifying a color having red component value 1, green component value 2, and blue component value 3, set the parameter value as 10203.

1.16.4 Notes

(1) At power–up, the color scheme of the screen is determined by the setting in the COLOR1 area (parameters). If no data is stored in the COLOR1 area, the last color scheme before power–down is applied.

(2) The standard color data specified in parameters must not be changed by direct MDI key input. When changing the parameter data, set and store the new data on the color setting screen.

(3) When a wrong value is specified in a standard color data parameter, the screen may not be displayed. If this occurs, turn the power on again, while pressing the DELETE and RESET keys. This clears the whole stored color scheme and restores the FANUC standard color scheme instead.
Be very careful when performing this operation, as all memory contents such as parameters and programs are lost.

1.17 CONTRAST ADJUSTMENT

Depending on the eye level and the viewing angle of the operator, the LCD may be hard to read. This problem can be solved by adjusting the contrast. The contrast of a monochrome LCD can be adjusted.

1. Press the OFFSET SETTING function key.
2. Press the [SETTING] chapter selection soft key.
   The LCD contrast item is displayed on the setting (handy) screen.

```
SETTING(HANDY)
PARAMETER WRITE  = 1(0:DISABLE 1: ENABLE)
TV CHECK         = 0(0:OFF 1:ON)
PUNCH CODE       = 0(0:EIA 1:ISO)
INPUT UNIT       = 0(0:MM  1:INCH)
I/O CHANNEL      = 0(0-3:CHANNEL NO.)
SEQUENCE NO.     = 0(0:OFF 1:ON)
TAPE EORMAT      = 0(0:NO CNV 1:F15)
SEQUENCE STOP    = 0(PROGRAM NO.)
SEQUENCE STOP    = 0(SEQUENCE NO.)

[ CONTRAST ]( + = [ ON:1 ] - = [ OFF:0 ])
>_
MDI **** *** *** 00:00:00
[NO.SRH] [ ON:1 ] [OFF:0] [+INPUT] [INPUT]
```

3. Move the cursor to “CONTRAST”.
4. Adjust the contrast by pressing the operation soft key [ON:1] or [OFF:0].

7.2–inch Monochrome LCD (CRT Link) Adjustment

The 7.2–inch monochrome LCD (connecting using CRT Link) is provided with a contrast adjustment potentiometer and video signal adjustment switches.
The contrast is adjusted when the LCD adapter or panel is replaced. Otherwise, it should not be necessary to use the adjustment switches.

Adjustment points

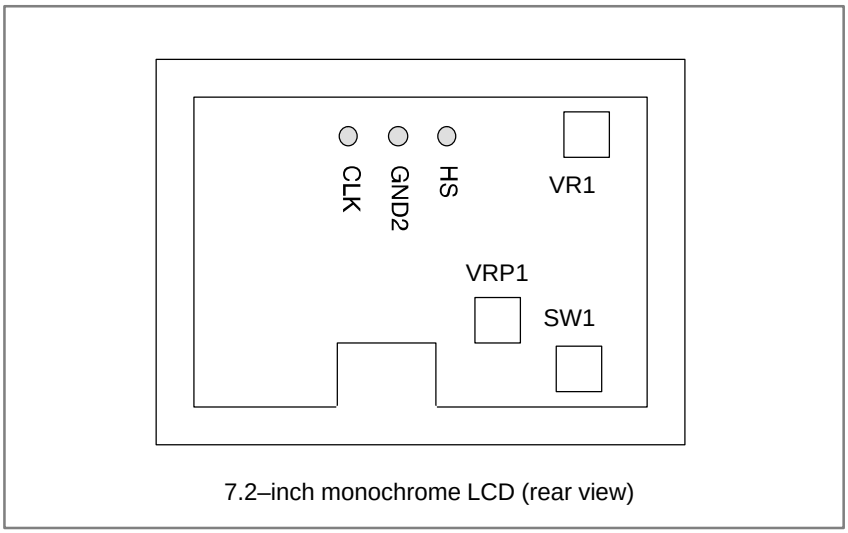

7.2–inch monochrome LCD (rear view)

Adjustment procedure

(1) Contrast adjustment

Potentiometer VRP1

This adjustment is made to compensate for variations between, individual LCD adapters and LCD panels. When an LCD adapter or panel is replaced, the following adjustment must be made. If the entire LCD unit is replaced, however, no adjustment is needed.

(a) First, adjust potentiometer VRP1 until the displayed characters (all black areas) appear white.

(b) Rotate the potentiometer in the opposite direction until the characters appear clear and black.

(2) Flicker adjustment

Potentiometer VR1

This potentiometer is factory–set and normally need not be adjusted by the user. If the setting is changed by mistake, re–adjust it according to the following procedure. Note that some versions of this printed–circuit board do not have this potentiometer; adjustment is performed automatically.

(a) Using the check pins, observe HS and CLK on an oscilloscope.

(b) Over part of the range of potentiometer VR1, the positive–going edge of HS will be almost in phase with the positive–going edge of the CLK. Rotating the potentiometer a little does not change the phase difference. Set the potentiometer to the midpoint of this range.

(c) After completing the adjustment, confirm that the display does not flicker.

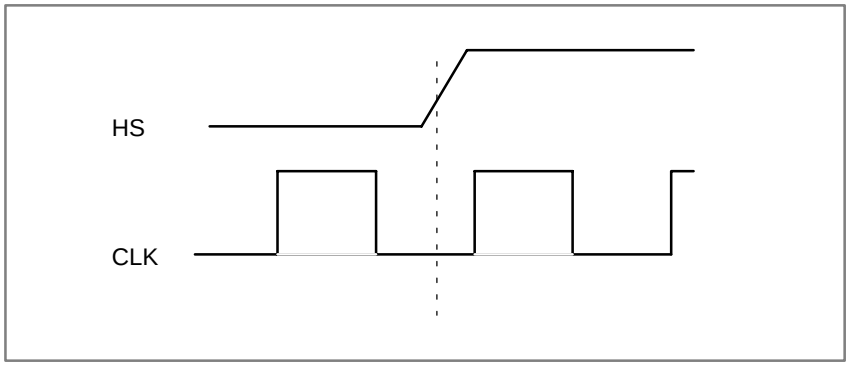

(3) Horizontal position adjustment

Switch SW1

This switch is factory–set and normally need not be adjusted by the user. If the setting is changed by mistake, re–adjust it according to the following procedure.

(a) Switch SW1 is used to move the display horizontally in units of dots.

(b) Set the switch to the point between 8 and B where the entire display is visible.

(c) The default setting is 9.

NOTE

If the ambient temperature is low, the brightness of the LCD decreases (immediately after the power is turned on, in particular). This is due to the characteristics of the LCD, and does not indicate a fault. As the ambient temperature rises, the LCD becomes brighter.

1.18 POWER MOTION MANAGER

When the Power Motion series is used as an additional axis (slave) of the CNC, the power motion manager allows the slave data to be displayed and set by the CNC.
The power motion manager enables the following display and setting:

(1) Current position display (absolute/machine coordinates)

(2) Parameter display and setting

(3) Diagnosis display

(4) System configuration screen display

(5) Alarm display

The Power Motion series that can be used as the slave is a β amplifier with I/O Link.

1.18.1 Parameter

	#7	#6	#5	#4	#3	#2	#1	#0
960		2CH	ASG	SLPWE	PMN	MD2	MD1	SLV

[Data type] Bit

SLV When the power motion manager is selected, the screen shows the data of:

0 : A single slave.
1 : Up to four slaves by dividing the screen into four segments.

MD1, MD2 The slave parameters are input from and output to the following devices:

MD2	MD1	I/O device
0	0	Part program storage
0	1	Memory card

The parameters are input or output in the program format, no matter which I/O device is selected.

PMN The power motion manager function is:

0 : Enabled.
1 : Disabled. (Communication with the slave is not performed.)

SLPWE The settings of slave parameters:

0 : Can be made by Power mate CNC manager regardless of the PWE setting.
1 : Are made according to the PWE setting.

ASG Whether or not the number of bytes allocated to the input/output destination of the β amplifier with I/O links is 16:

0 : Is checked.
1 : Is not checked.

2CH Power mate CNC manager:

0 : Communicates with channel 2.
1 : Communicates with channel 1.

NOTE
1 The parameters are valid only when I/O link count extension is supported (two channels are supported).
2 Even when 0 is set, Power Mate CNC Manager communicates with channel 1 if the β amplifier with I/O links is not connected to channel 2.
3 When 1 is set, Power Mate CNC Manager does not communicate with channel 2 if the β amplifier with I/O links is not connected to channel 1.

1.18.2 Screen Display

1. Press the [SYSTEM] function key.
2. Press the continuous menu key [▷] several times. The [PMM] soft key appears.
3. Press the [PMM] soft key. The system configuration screen, which is the initial screen of the power motion manager, appears. The screen has the following soft keys (function selection soft keys).

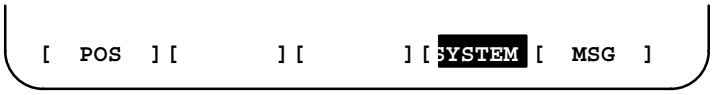

The currently active soft key is displayed in reverse video. Pressing a soft key enables the corresponding function, as indicated below:

POS: Current position display
SYSTEM: System information
MSG: Alarm list

To select another function after one of the functions listed above is selected, press the return menu key [◁] several times until the soft keys are displayed as shown above. Then, select the desired function.

4. To terminate the power motion manager, repeatedly press the return menu key [◁] until the function selection keys are displayed as shown above. Then, press the return menu key once more. The soft keys of the CNC system appear, and the power motion manager terminates. The system configuration screen of this function is displayed as the termination screen.

Alternative termination method is to select another function while this function is enabled. To do this, press an MDI function key ([POS] , [PROG] , [MESSAGE] , etc.).

NOTE
After another screen is displayed by pressing a function key, pressing the [SYSTEM] function key, restores the initial status of this function. That is, the soft keys shown above are restored. The data that was being input is canceled.

- **System configuration screen**

This screen displays the system software information of the slave. The screen is displayed first when the power motion manager function is selected. This screen is automatically displayed also at the termination of the function.

1. Press the [SYSTEM] function selection soft key. The following soft keys are displayed together with the screen displayed when SYSTEM was last selected. The currently active soft key is displayed in reverse video.

```
[ PARAM ][ DGNOS ][      ][SYSTEM][     ]
```

2. Press the [SYSTEM] soft key again. The system configuration screen appears. While this screen is displayed, the [SYSTEM] soft key is left displayed in reverse video.

```
POWER MOTION MANAGER
SYSTEM CONFIGURATION
1.GROUP0 / β

SYSTEM  <SERIES/VERSION>            88A1 01

[ PARAM ][ DGNOS ][      ][ SYSTEM ][      ]
```

Sample screen: Series and edition of the servo unit β series system list

- **Parameter screen**

The parameters necessary for the functions of the slave must be specified in advance.

1. Press the [SYSTEM] function selection soft key. The following soft keys appear.

```
[ PARAM ][ DGNOS ][      ][SYSTEM][     ]
```

2. Press the [PARAM] soft key. The parameter screen appears.

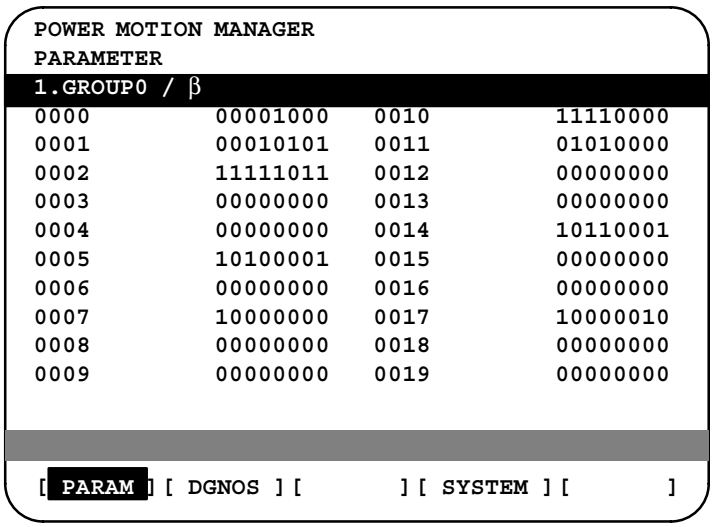

The screen displays just the bit and decimal data. For details of the parameters, refer to the connection manual of the corresponding Power Motion unit.

● Searching for a parameter

A search can be made for the parameter to be displayed.

1. Select the active slave.
2. Press the [(OPRT)] soft key. The following soft keys appear.

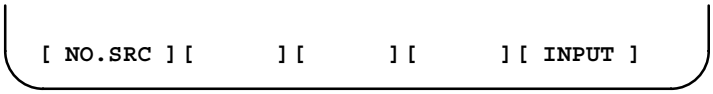

3. Enter a desired number in the key–in field by using MDI numeric keys. Then, press the [NO.SRC] soft key. The search starts.

● Setting a parameter

A parameter of a slave Power Motion unit can be directly set from the CNC.

1. Select the active slave.
2. Press the [(OPRT)] soft key. The following soft keys appear:

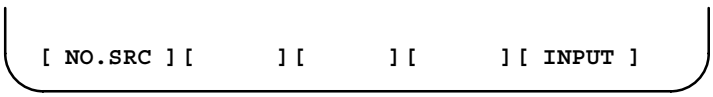

3. Move the cursor to the parameter to be set.
4. Enter desired data in the key–in buffer by using MDI numeric keys. Then, press the [INPUT] soft key. Alternatively, press the MDI INPUT key.

- **Diagnosis screen**

This screen shows the current status of the slave.

1. Press the [SYSTEM] function selection soft key. The following soft keys appear:

```
[ PARAM ][ DGNOS ][      ][SYSTEM][      ]
```

2. Press the [DGNOS] soft key. The diagnosis screen appears. The displayed data is basically the same as the data displayed on the parameter screen.

   For details of the diagnosis information, refer to the connection manual of the corresponding Power Motion unit.

- **Current position display**

The screen shows the current position on the workpiece coordinate system or machine coordinate system.

1. Press the [POS] function selection soft key. The following soft keys appear:

```
[ WORK  ][      ][MACHIN][      ][      ]
```

2. To see the absolute coordinate screen, press the [WORK] soft key. To see the machine coordinate screen, press the [MACHIN] soft key.

```
POWER MOTION MANAGER
ACTUAL POSITION (MACHINE)
1.GROUP0 / β

      1     1267900
      F        3500




[ WORK  ][      ][ MACHIN ][      ][      ]
```

1: Coordinate F: Actual speed

- **Alarm screen**

If an alarm is issued during operation, the group number of the slave causing the alarm is indicated at the right end of the message field on the screen. Check the details on the alarm screen. For example, (13) means that the first and third power motion units are in the alarm state.

1. Press the [MSG] function selection soft key. Just the error code is displayed on the screen.

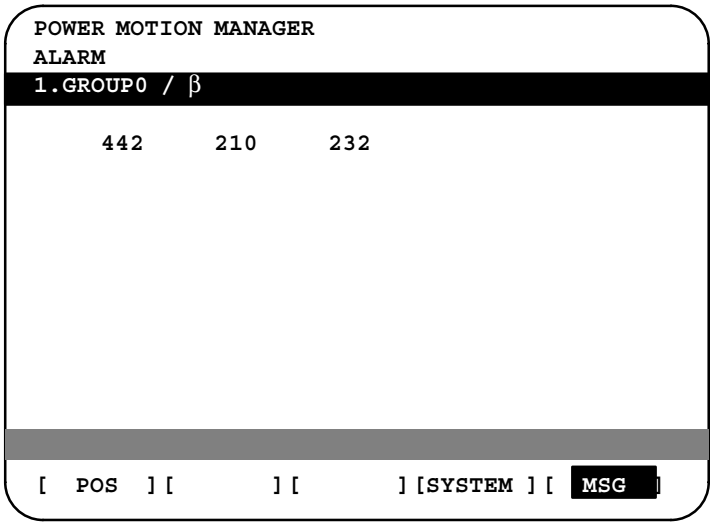

Up to forty codes can be displayed on the screen.

For details of the alarm, refer to the connection manual of the corresponding Power Motion unit.

- **Operating the active slave**

The active slave is subjected to the ZOOM function, which will be described later, and parameter overwrite. The title of the active slave is displayed in a color different from the display color of the other slave titles.

The active slave can be selected by pressing the [↓NEXT] or [↑BACK] soft key, which is displayed after the continuous menu key ▷ is pressed several times.

[↓NEXT]: Displays the screen of the Power Motion unit connected after the currently active slave. The equipment other than the Power Motion unit is ignored.

[↑BACK]: Displays the screen of the Power Motion unit connected before the currently active slave.

- **Single–slave display/ Four–slave display**

Whether the screen displays the data of just a single unit or of four units in four segments is specified in the SLV bit (bit 0 of parameter 960).

To switch the four–slave display to the single–slave display, press the [ZOOM] soft key, which is displayed after the continuous menu key ▷ is pressed several times. The single–slave display shows the data of the active slave. To switch the single–slave display to the four–slave display showing the data of four slaves including the active slave, press the [ZOOM] key.

When five or more slaves are connected, the four–slave display has two or more pages. To see the slave data that is not displayed on the current page, press soft key [↓NEXT].

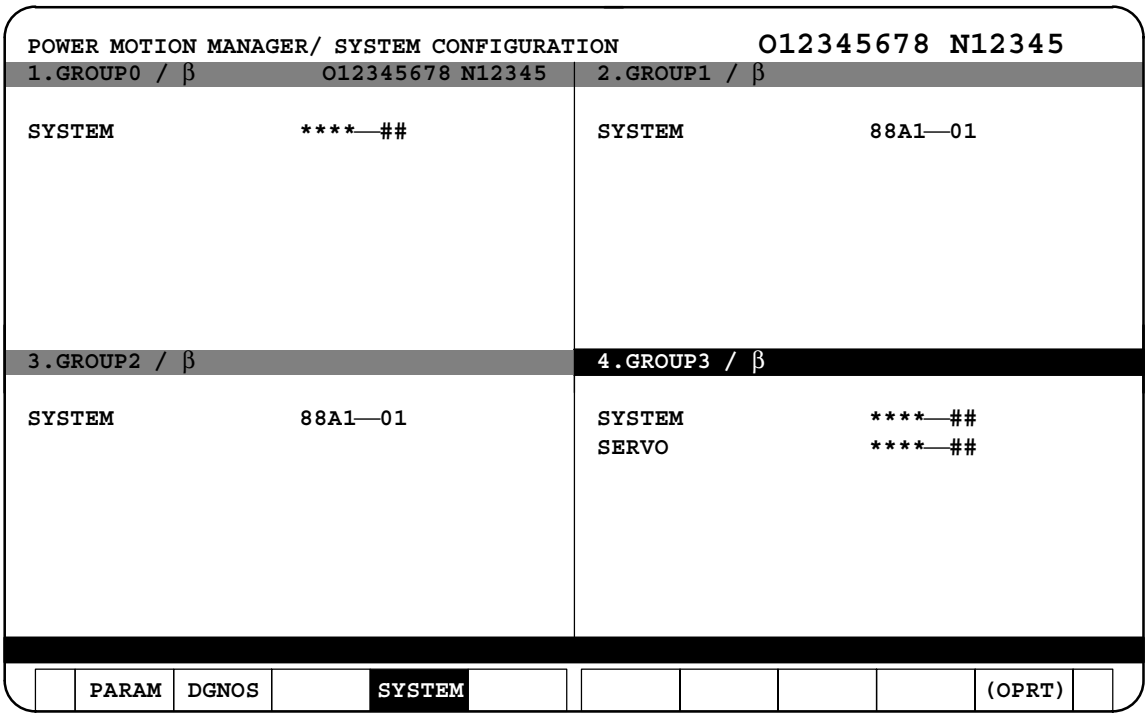

The figure above shows a sample four–slave display screen on a display unit with twelve soft keys. A unit with seven soft keys can also display the four–slave display screen.

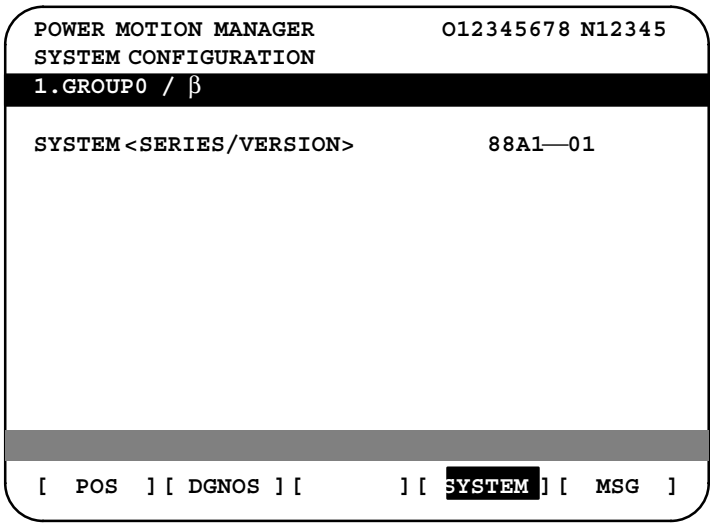

The figure above shows a sample single–slave display screen on a display unit with seven soft keys. A unit with twelve soft keys can also display the single–slave display screen.

- **Guidance message**

While the following soft keys are being displayed, a guidance message is displayed in the message field.

```
[  POS  ][       ][       ][SYSTEM][  MSG  ]
```

```
[ WORK  ][       ][MACHIN ][      ][       ]
```

```
[ PARAM ][ DGNOS ][       ][SYSTEM][(OPRT) ]
```

When the soft keys are displayed as shown above, “SELECT ACTIVE SLAVE [>]” is displayed.

```
[ ↓NEXT ][ ↑BACK ][ ZOOM  ][      ][      ]
```

When the soft keys are displayed as shown above, “SELECT ACTIVE SLAVE [↓] [↑]” is displayed.

- **Key–in field**

When the [(OPRT)] soft key is pressed, the message line may turn into a key–in field as required. The numeric data input by using MDI keys is displayed after the prompt (>).

On the parameter and diagnosis screens, the key–in field appears when just a numeric value is input. The soft key [(OPRT)] need not be pressed.

1.18.3 Parameter Input/Output

- **Saving parameters**

Parameters can be saved in CNC memory or a memory card as a data file of program format. Specify the first digit of the registration program number in parameter 8760. Programs with predetermined numbers are created for individual slaves. When the parameters are saved in CNC memory, a program having the specified program number is created. When the parameters are saved in a memory card, a file is created, to which the file name consists of the specified program number and an extension PMM.

Example: When parameter 8760 is set to 8000

The program number for group n is 8000 + n*10.

The group number n is indicated in the title area of each slave.

CAUTION
In case that the parameters are saved in a memory card, If the specified program number already exists on memory card, the corresponding program is overwritten with new data.

Specify a desired input device in the MD1 and MD2 bits (bits 1 and 2 of parameter 960). Connect a memory card. Alternatively, check the free area of CNC memory. Then, follow the steps given below:

1. Select the active slave.
2. Press the [(OPRT)] soft key. The following soft keys appear:

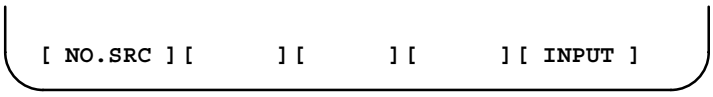

3. Press the continuous menu key [▷]. The following soft keys appear:

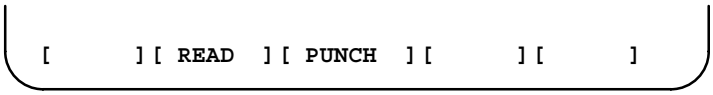

4. Press the [READ] soft key. The following soft keys appear:

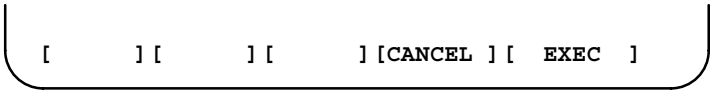

5. Press the [EXEC] soft key.
   During input, “INPUT” blinks in the message field.

- **Writing parameters**

The data file of parameters saved in CNC memory or a memory card as a program is written into the slave determined by the program number. The program number and memory device are determined as described in “Saving parameters.”

1. Select the active slave.
2. Press the [(OPRT)] soft key. The following soft keys appear:

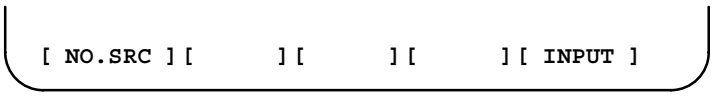

3. Press the next–menu key. The following soft keys appear:

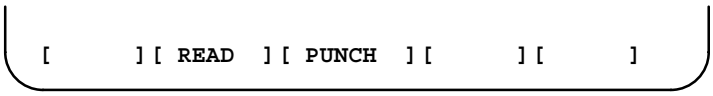

4. Press the [PUNCH] soft key. The following soft keys appear:

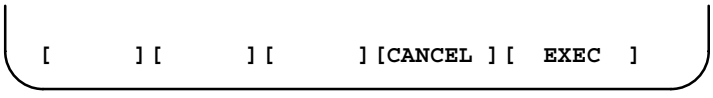

5. Press the [EXEC] soft key.

During output, “INPUT” blinks in the message field.

The screen cannot be changed to another screen during parameter input/output.

When the RESET key is pressed, or when an alarm status is detected in communication, the input/output stops.

1.18.4 Notes

- **Connecting an I/O Link**

When the Power Motion series is used as a slave of an I/O Link, the CNC assigns I/O addresses. The salve data is input and output in units of 16 bytes. Therefore, 128 input/output points are necessary. Up to eight slaves can be connected.

The module name is OC021 (16–byte input) or OC020 (16–byte output). BASE is always 0, and SLOT is always 1.

- **Ignoring the power motion manager function**

After the data necessary for each slave connected is set and checked, the communication of the power motion manager (PMM) can be stopped to send a command from the CNC ladder to the slave.

When the PMN bit (bit 3 of parameter 960) is set to 1, all communication between CNC and the slave via the I/O Link is open to the ladder.

While the bit is held 1, the screen shows just the title, function name, and other items that are independent of the communication. The following message appears to indicate that communication has stopped.

COMMUNICATION PROHIBITED BY P960#3

- **Data input/output by I/O Link**

When the power motion manager is used, the function for data input/output by I/O Link cannot be used.

- **Alarm**

(1) CNC

When a CNC alarm status is detected, the screen is automatically switched to the CNC alarm screen. Check the details of the alarm. If necessary, display and select the power motion manager screen again by pressing function key SYSTEM .

(2) Slave

A guidance message is usually displayed in the message field. If a slave alarm is detected, the corresponding slave group number is displayed at the right end.

Display the alarm screen to check the details.

- **Data protection key**

When the data protection key of the CNC is turned on, parameters cannot be input to CNC memory.

1.19 PERIODIC MAINTENANCE SCREENS

Using the periodic maintenance screens makes it easy to manage consumables (such as LCD unit backlight and backup battery) that are to be replaced periodically.

Setting the name and service life of consumables, and the countdown method to be used for them enables counting of the remaining service time according to the specified countdown method and displaying of the result.

1.19.1 Overview

- **Screen configuration**

The following periodic maintenance screens are available:

(1) Status screen: Displays item names, remaining service time, countdown status, and lets you specify item names.

(2) Setting screen: Lets you specify service life, remaining service time, and count type (countdown method).

(3) Machine system menu screen: Enables registering the names of consumables used in the machine.

(4) NC system menu screen: Displays the names of registered consumables used in the NC.

- **Procedure**

To use this function, follow the steps below:

(1) Select a number for registration (using the cursor key on the status screen).

(2) Specify an item name.
The following two methods are available.
– Selecting a name from a menu screen (machine or NC system menu screen).
– Entering a name to the status screen directly from the MDI.
Using the machine system menu screen requires that item names be registered previously.

(3) Specify the service life, remaining service time, and count type for a target item.
Once they are specified, the remaining service time can be checked on the status screen.

1.19.2 Screen Display and Setting

1 Press the SYSTEM function key.

2 Press the ▷ continuous menu key several times. Soft key [MAINTE] appears.

3 Press soft key [MAINTE]. A periodic maintenance screen appears.

There are two periodic maintenance screens, status and setting screens. Either screen can be selected using soft key [CHANGE].

1.19.3 Status Screen Display and Setting

Up to 10 consumable items can be registered for management. Their remaining service time and count status are displayed on the status screen.

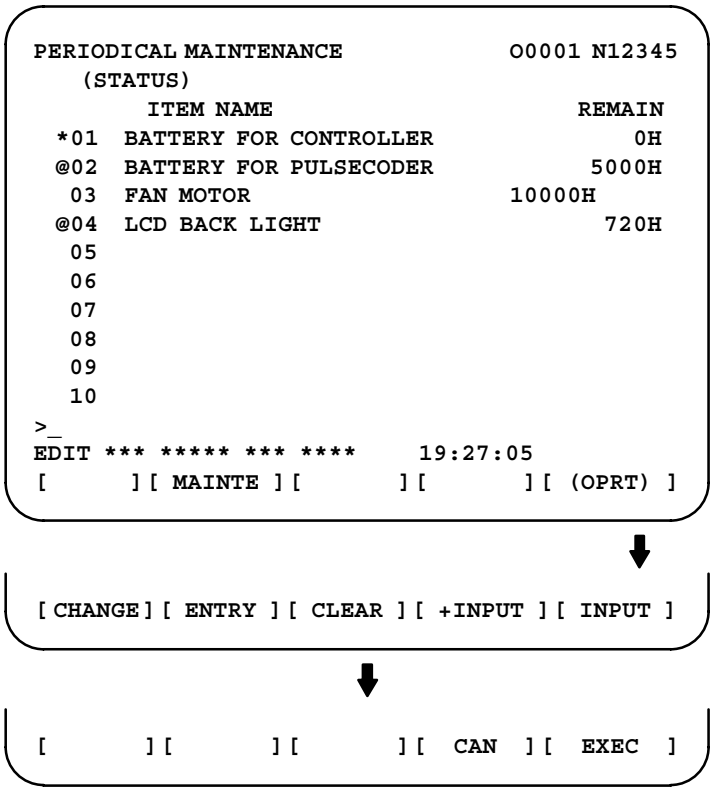

(1) Item name

The name of an item to be subjected to periodic maintenance is specified under “Item name.”

Two methods can be used to specify item names. The first method uses the menu screen, and the second, the MDI keypad.

(1) Method of using the menu screen

1 Place the cursor on the target item name, and press soft key [ENTRY]. A menu screen appears. The menu screen is either the machine or NC system menu screen.

2 Press soft key [MACHIN] or [NC]. A machine system menu appears. It holds the names of consumables typical to the machine system or NC system.

3 Place the cursor on a registered item name, and press soft key [SELECT], then soft key [EXEC]. The status screen appears again, enabling the selected item to be set up.

4 Press soft key [CAN]. The previous soft key displays appear again.

5 Press soft key [MAINTE]. The status screen appears again.

Using the machine system menu screen requires that item names be registered on the screen previously.

This can be done using two methods, (a) and (b).

(a) Program–based registration

Executing a program in the following format enables item names to be registered on the machine system menu screen.

Format

G10 L61 Px [n]

x… Registration number

n… Item name
[Alphanumeric characters*two–byte characters*alphanumeric characters]

(b) MDI keypad–based registration

An item name can be registered on the machine system menu screen by first entering it in the following format, then pressing soft key [INPUT] (or INPUT function key).

Pressing soft key [+INPUT] adds the item name to the list of previously registered item names.

Format

Alphanumeric characters*two–byte characters*alphanumeric characters

The two–byte characters shall comply with the FANUC code. (See Section 1.19.6.)
When entering a two–byte character, sandwich it with an "*" pair.

The item name can consist of up to 24 alphanumeric characters (if no two–byte character is included) or 12 two–byte characters (if no alphanumeric character is included).

Example) To register "LCD backlight," enter:
>LCD*110E10F410CC114010B610FE_

NOTE
1 "*" cannot be used in item names, because it is used as control code. "[", "]", "(", or ")" also cannot be used in item names.
2 When both alphanumeric and two–byte characters are used in an item name to be registered, the warning message "DATA IS OUT OF RANGE" may appear even if the maximum allowable number of characters has not been exceeded.
3 If a blank item name is selected from the machine system screen, the warning message "EDIT REJECTED" appears. If a blank item name is selected from the NC system screen, a blank is set up.

To erase the registered data for an item, place the cursor on the target item name, and press soft key [CLEAR], then soft key [EXEC].

[Machine system] menu screen

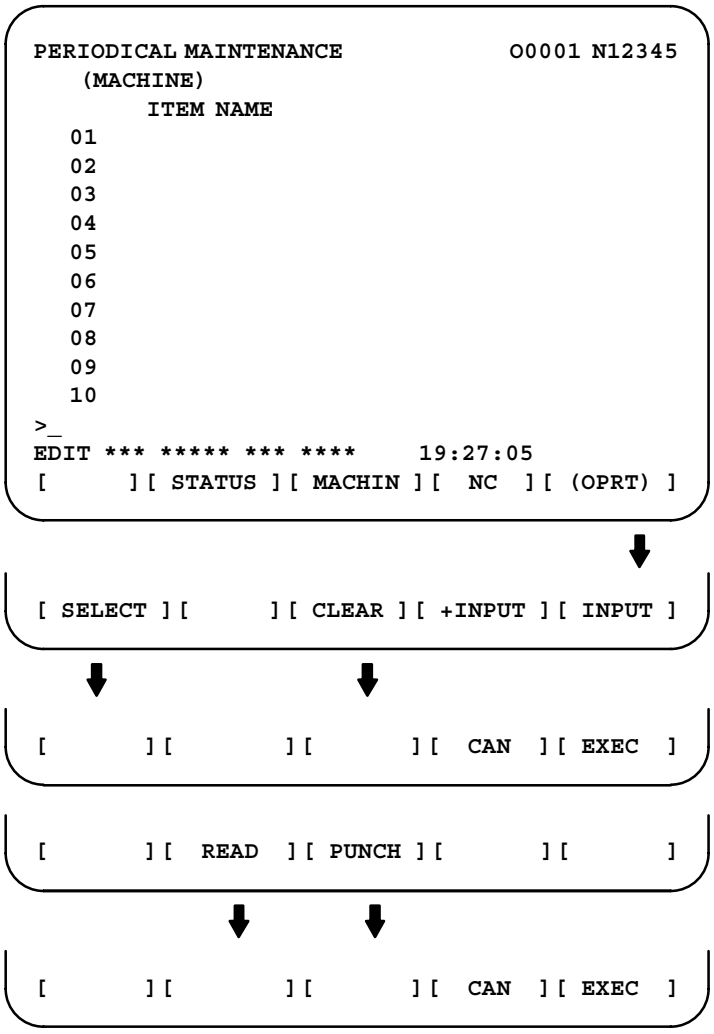

[NC system] menu screen

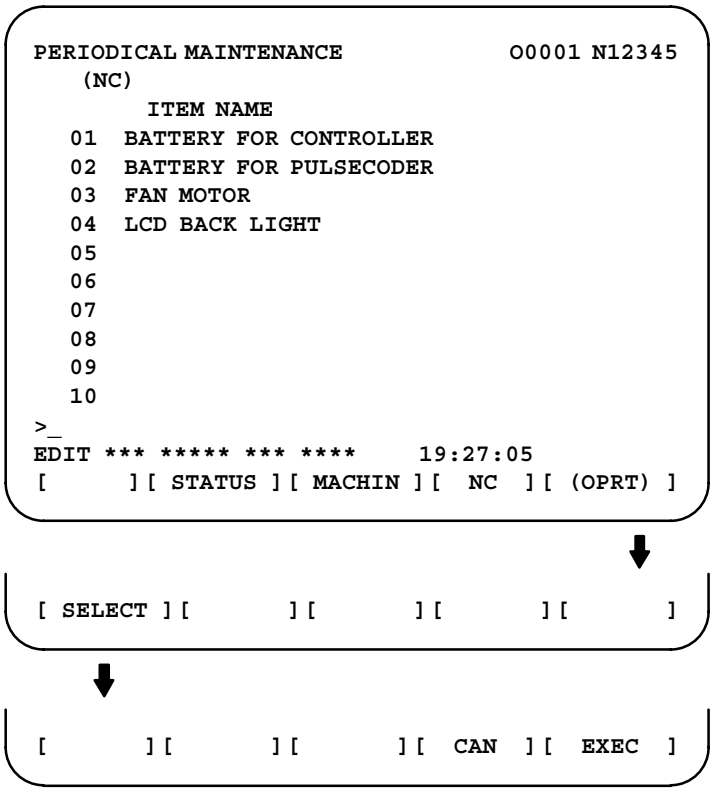

NOTE
On the NC system screen, no item name can be registered, erased, input, or output.

(2) MDI keypad–based setting

An item name can be registered on the status screen by first entering it in the following format using keys, then pressing soft key [INPUT] (or the INPUT key).

Pressing soft key [+INPUT] adds the item name to the list of previously registered item names.

Format

Alphanumeric characters*two–byte characters*alphanumeric characters

The two–byte characters shall comply with the FANUC code. (See Section 1.19.6.)

When entering a two–byte character using keys, sandwich it with an "*" pair.

The item name can consist of up to 24 alphanumeric characters (if no two–byte character is included) or 12 two–byte characters (if no alphanumeric character is included).

Example) To register "LCD backlight," enter:
>LCD*110E10F410CC114010B610FE_

NOTE
1 “*” cannot be used in item names, because it is used as control code. “[”, “]”, “(“, or “)” also cannot be used in item names.
2 When both alphanumeric and two–byte characters are used in an item name to be registered, the warning message “DATA IS OUT OF RANGE” may appear even if the maximum allowable number of characters has not been exceeded.

To erase the registered data for an item, place the cursor on the target item name, press soft key [CLEAR], then [EXEC].

When an item name is deleted, the related service life, remaining service time, and count type are also deleted.

(2) Remaining service time

The remaining service time of an item (the time allowed before the item is replaced) is obtained by count–down and displayed under “Remaining service time.” When the remaining service time decreases to a specified percentage (specified in parameter No. 8911) of the service life or lower, it is displayed in red.

Count–down continues even after the service life has expired.

NOTE
Setting is impossible on the status screen.
It should be done on the setting screen.

(3) Count status

The count status is displayed at the left of the corresponding item number, as listed below:

Display	Count status
Blank	Count suspended
@	Count under way
*	The service life has expired.

1.19.4 Setting Screen Display and Setting

The setting screen lets you specify the service life, the remaining service time, and count type for a registered item name.
It also displays the same count status information as displayed on the status screen.

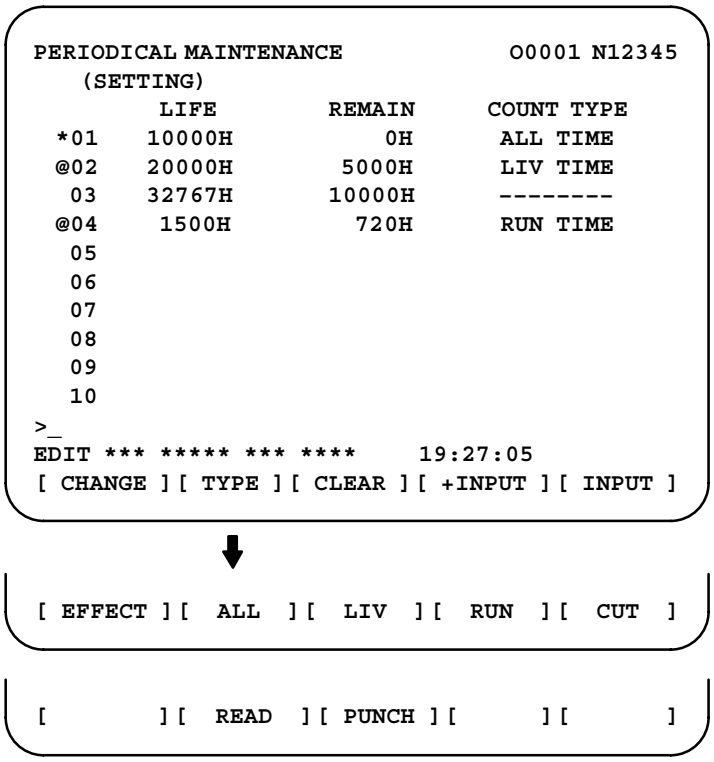

(1) Service life

The service life of a consumable item is to be specified under “Service life.”

First place the cursor on the service life of a target registration number, enter a desired service life value using numeric keys, then press soft key [INPUT] (or the INPUT key). The specified service life is set up, and the same value is set up also under “Remaining service time.”
In addition, the count type for the item changes to: “———”
Pressing soft key [+INPUT] adds the newly specified service life value to the previously specified life value. The added service life value is reflected to the remaining service time.

The valid data range for the service life is: 0 to 65535 (hours)

NOTE
1 An attempt to set up the service life for a non–registered item results in the warning message “EDIT REJECTED”.
2 An attempt to enter a value that is out of the valid data range results in the warning message “DATA IS OUT OF RANGE”.
3 An attempt to enter a value that would make the service life or remaining service time 0 or lower, it is clamped at 0.
4 Pressing soft keys [CLEAR] and [TYPE] results in the warning message “EDIT REJECTED”.

(2) Remaining service time

The remaining service time of an item (the time allowed before the item is replaced) is determined by count–down and displayed under "Remaining service time." When the remaining service time decreases to a specified percentage (specified in parameter No. 8911) of the service life or lower, it is displayed in red.

Count–down continues even after the service life has expired.

First place the cursor on the remaining service time of a target registration number, enter a desired remaining service time value using numeric keys, then press soft key [INPUT] (or the INPUT key).

Pressing soft key [+INPUT] adds the newly specified remaining service time to the previously specified remaining service time.

The valid data range for the remaining service time is: 0 to (service life)

After soft key [CLEAR] is pressed, pressing soft key [EXEC] sets the remaining service time with the same value as for the service life.

NOTE

1 An attempt to set up the remaining service time for a non–registered item or an item for which the service life has not been set up results in the warning message "EDIT REJECTED".
2 An attempt to enter a value that is out of the valid data range results in the warning message "DATA IS OUT OF RANGE".
3 An attempt to enter a value that would make the remaining service time 0 or lower, it is clamped at 0.
4. Pressing soft key [TYPE] results in the warning message "EDIT REJECTED".

(3) Count type

The type of a selected count method is specified under "Count type." After the cursor is placed on the count type of a target registration number, pressing soft key [TYPE] displays the next count type as a soft key. Select it and press soft key [EXEC].

Soft key	Meaning	Display
[NO CNT]	Not counting (suspended).	—
[ALL]	Always count.	All times
[PWR ON]	Count while the power is supplied.	Power–on time
[RUN]	Count while operation is under way.	Operating
[CUT]	Count while cutting is under way.	Cutting

NOTE
1 An attempt to set up the count type for a non–registered item or an item for which the service life has not been set up results in the warning message “EDIT REJECTED”.
2 Soft keys [INPUT] and [+INPUT] are ignored.
3 In leap years, an error of 24 hours occurs in the all–time count.
4 Pressing soft key [CLEAR] results in the warning message “EDIT REJECTED”.

1.19.5 Registered Data Input/Output

Pressing soft key [PUNCH] enables registered data to be output to an external unit.
Pressing soft key [READ] enables data to be input from an external unit.
These operations can be done on the status, setting, and machine system menu screens.

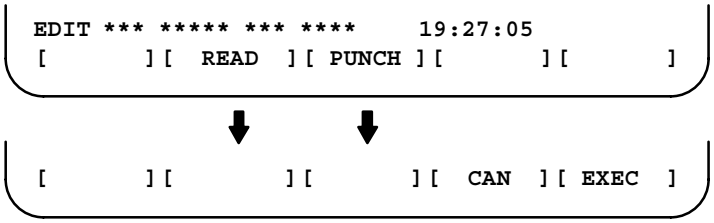

- **Data output**

After the EDIT mode is selected, pressing soft key [PUNCH] outputs the registered data in the following format.

Format

❑ Format for output from the status and setting screens

```
G10 L60 P01 Aa Rr [n] Qq ;
G10 L60 P02 Aa Rr [n] Qq ;
G10 L60 P03 Aa Rr [n] Qq ;
      :
```

Format

❑ Format for output from the machine system menu

```
G10 L61 P01 [n]  ;
G10 L61 P02 [n]  ;
G10 L61 P03 [n]  ;
      :
```

a : Service life
r : Remaining service time
n : Item name
[Alphanumeric characters*two–byte characters * alphanumeric characters
q : count type
0 = not to count
1 = count at all times
2 = count during power–on time
3 = count during operation
4 = count during cutting

- **Data input**

After the EDIT mode is selected, pressing soft key [READ] causes data to be registered with item names according to the format in which the data is input (G10).
Data registration can be done even by executing the format (G10) once input to the program memory.
This requires a programmable data input option.

NOTE
If the input format (G10) differs from the output format, registration may fail.

Parameter

8911	Percentage to the service life of each item displayed on the periodic maintenance screen

[Data type] Byte

[Unit of data] 1%

[Valid data range] 0 to 100

On the periodic maintenance screens, any remaining service time value smaller than the specified percentage to the service life is displayed in red for warning purposes.

1.19.6
FANUC Two–Byte Character Code Table

	00	02	04	06	08	0A	0C	0E	10	12	14	16	18	1A	1C	1E
0200	ぁ	あ	ぃ	い	ぅ	う	ぇ	え	ぉ	お	か	が	き	ぎ	く	ぐ
0220	け	げ	こ	ご	さ	ざ	し	じ	す	ず	せ	ぜ	そ	ぞ	た	だ
0240	ち	ぢ	っ	つ	づ	て	で	と	ど	な	に	ぬ	ね	の	は	ば
0260	ぱ	ひ	び	ぴ	ふ	ぶ	ぷ	へ	べ	ぺ	ほ	ぼ	ぽ	ま	み	む
0280	め	も	ゃ	や	ゅ	ゆ	ょ	よ	ら	り	る	れ	ろ	ゎ	わ	素
02A0	材	を	ん	種	類	棒	穴	成	形	質	寸	法	外	径	長	端
02C0	面	最	小	内	大	加	工	切	削	倣	正	途	中	荒	具	番
02E0	号	仕	上	込	点	方	向	速	度	送	量	開	始	深	主	軸
0300	回	転	数	位	置	決	直	線	時	円	反	現	在	指	令	値
0320	領	域	診	断	操	作	手	引	機	械	残	移	動	次	早	電
0340	源	投	入	間	分	秒	自	運	負	荷	実	使	用	寿	命	新
0360	規	除	隅	取	単	補	能	独	終	了	記	角	溝	刃	幅	広
0380	設	定	一	覧	表	部	炭	合	金	鋼	超	硬	先	付	摩	耗
03A0	仮	想	副	行	挿	消	去	山	高	準	備	完	後	弧	助	択
03C0	無	相	器	原	登	録	再	処	理	描	画	過	容	編	集	未
03E0	対		座	標	示	名	歯	変	呼	推	馬	力	系	選	達	閉

	00	02	04	06	08	0A	0C	0E	10	12	14	16	18	1A	1C	1E
0400	禁	復	帰	書	個	桁	稼	由	両	半	逃	底	逆	下	空	四
0420	触	平	代	辺	格	子	周	心	本	群	停	止	巾	微	状	路
0440	範	囲	倍	率	注	側	特	殊	距	離	連	続	増	隔	件	初
0460	期	条	経	握	圧	扱	陰	隠	右	押	横	黄	億	屋	化	何
0480	絵	階	概	該	巻	換	気	起	軌	技	疑	供	共	境	強	教
04A0	掘	繰	係	傾	型	検	権	研	肩	見	験	元	弦	減	孔	巧
04C0	控	更	校	構	根	左	差	雑	参	散	産	算	治	耳	式	失
04E0	修	十	従	勝	商	少	尚	昇	植	色	食	伸	信	侵	振	浸
0500	真	暗	以	意	異	影	鋭	越	価	可	科	果	箇	課	各	拡
0520	核	学	掛	漢	簡	観	関	含	却	客	休	急	業	曲	均	筋
0540	継	計	軽	言	限	互	降	採	済	細	姿	思	写	射	斜	者
0560	車	借	縦	重	出	述	術	渉	照	省	章	証	象	身	進	人
0580	図	違	印	沿	遠	央	奥	往	応	会	解	改	割	活	願	基
05A0	奇	寄	岐	既	近	区	矩	駆	偶	旧	求	球	究	級	欠	結
05C0	口	語	誤	交	厚	項	刻	告	黒	財	策	糸	試	資	事	持
05E0	似	釈	弱	受	収	純	順	所	序	剰	場	常	飾	水	錐	据
0600	制	整	製	前	全	然	則	属	即	他	多	存	谷	探	短	徴
0620	鎖	調	頂	鉄	添	頭	同	導	道	熱	年	濃	箱	発	抜	伴
0640	必	百	複	物	文	間	併	忘	末	密	有	余	与	裏	立	略
0660	青	席	石	積	赤	接	折	粗	創	双	捜	太	打	体	待	態
0680	替	段	知	地	致	遅	追	通	伝	得	読	凸	凹	突	鈍	敗
06A0	杯	背	配	品	不	布	並	頁	別	片	返	勉	弁	保	明	滅
06C0	木	目	歪	揺	様	溶	要	抑	良	輪	和	話	枠	節	説	絶
06E0	千	専	浅	旋	総	走	退	台	第	題	卓	室	着	柱	鋳	丁
0700	低	訂	肉	日	白	薄	比	皮	被	非	美	普	伏	歩	包	門
0720	問	絡	列	万	利	訳	礼	乱	放	枚	約	練	油	劣	例	郭
0740	戻	冷	垂	緑	紫	許	測	精	効	→	↗	↑	↖	←	↙	↓
0760	↘	↻	↻	⌒	◯	■	板	予	〃	家	装	管	粉	等	▿	▽
0780	▽	▽	貫	安	α	β	程	抗	張	任	破	損	御	足	守	般
07A0	納	義	丸	汎	固	毎	当	的	詳	鳥	適	論	額	縁	温	給
07C0	界	混	監	締	護	己	称	樹	脂	料	落	確	認	報	排	性
07E0	生	績	判	搬	砥	θ	島	壁	◈	▨	◈	◈	🕮	／	〕〔	■■

	00	02	04	06	08	0A	0C	0E	10	12	14	16	18	1A	1C	1E
0800	阿	哀	愛	挨	逢	悪	旭	宛	案	闇	鞍	伊	依	偉	委	威
0820	慰	易	為	維	緯	胃	衣	遺	医	井	育	一	稲	員	因	飲
0840	院	羽	雨	過	唄	浦	瓜	噂	雲	営	映	栄	永	泳	洩	英
0860	衛	液	益	駅	園	延	援	演	炎	煙	鉛	塩	汚	王	岡	沖
0880	憶	腋	牡	乙	恩	穏	音	佳	夏	暇	架	歌	河	火	花	華
08A0	菓	貨	我	牙	芽	賀	雅	介	壊	廻	快	怪	海	灰	皆	貝
08C0	劾	害	慨	街	垣	殻	獲	覚	較	革	楽	笠	括	滑	株	刈
08E0	乾	寒	刊	勧	喚	官	寛	干	幹	感	慣	敢	歓	汗	環	甘
0900	看	緩	缶	肝	還	鑑	閑	陥	韓	館	岸	眼	岩	顔	企	危
0920	喜	希	幾	揮	机	旗	棄	毅	祈	季	稀	徽	輝	騎	擬	犠
0940	議	菊	詰	脚	丘	久	及	吸	宮	弓	救	泣	牛	居	巨	拒
0960	挙	虚	魚	亭	享	京	競	協	叫	挟	橋	況	狭	胸	興	郷
0980	鏡	響	驚	凝	局	極	玉	勤	錦	琴	銀	九	句	苦	馳	屑
09A0	屈	熊	君	訓	軍	郡	刑	兄	契	掲	敬	景	茎	警	芸	迎
09C0	劇	激	隙	潔	血	月	倹	健	兼	券	剣	圏	堅	建	憲	拳
09E0	犬	献	絹	県	謙	軒	鍵	険	幻	古	庫	戸	故	湖	狐	誇
0A00	顧	五	午	侯	候	光	公	勾	喉	好	孝	幸	康	弘	拘	攻
0A20	江	港	甲	稿	絞	綱	考	肯	衡	講	購	郊	鉱	香	剛	克
0A40	国	穀	酷	腰	骨	此	頃	今	困	婚	査	砂	債	妻	彩	才
0A60	災	砕	祭	菜	裁	載	際	剤	罪	坂	阪	咲	昨	索	錯	桜
0A80	冊	刷	察	撮	擦	札	殺	皿	三	撤	讃	賛	酸	伺	刺	史
0AA0	士	姉	市	師	支	枝	死	私	紙	詞	詩	字	寺	磁	辞	七
0AC0	湿	芝	縞	捨	煮	社	謝	尺	若	酒	首	授	需	秋	習	臭
0AE0	舟	週	住	柔	宿	祝	縮	熟	春	瞬	盾	巡	暑	女	傷	唱
0B00	奨	将	床	承	招	昭	焼	焦	笑	紹	衝	賞	障	乗	城	情
0B20	浄	蒸	錠	職	唇	寝	審	森	申	神	芯	親	辛	針	震	尽
0B40	陣	須	酢	吹	粋	遂	杉	裾	澄	世	是	勢	征	政	星	晴
0B60	清	盛	聖	声	西	誓	請	静	税	昔	析	籍	責	跡	雪	舌
0B80	占	宣	尖	川	戦	扇	栓	泉	洗	染	潜	船	銑	鮮	善	組
0BA0	訴	倉	層	掃	巣	争	窓	草	騒	像	臓	蔵	贈	造	促	息
0BC0	束	俗	卒	其	揃	尊	村	詑	堕	妥	耐	帯	怠	滞	袋	貸
0BE0	隊	滝	宅	拓	濯	託	濁	奪	脱	棚	誰	嘆	担	淡	団	弾

	00	02	04	06	08	0A	0C	0E	10	12	14	16	18	1A	1C	1E
0C00	暖	男	談	池	築	畜	竹	筑	秩	茶	昼	虫	駐	貯	帳	庁
0C20	彫	挑	朝	町	脹	腸	跳	沈	珍	賃	墜	痛	塚	爪	吊	釣
0C40	庭	廷	提	釘	泥	摘	滴	笛	典	天	展	店	貼	殿	田	吐
0C60	塗	徒	都	砥	努	土	怒	倒	冬	凍	刀	島	東	湯	灯	答
0C80	筒	統	到	藤	討	踏	透	働	堂	胴	銅	峠	徳	毒	届	曇
0CA0	謎	鍋	縄	南	軟	難	二	匂	乳	尿	念	燃	粘	悩	脳	農
0CC0	把	波	派	廃	拝	肺	買	売	博	拍	泊	舶	麦	肌	畑	八
0CE0	罰	版	犯	班	繁	販	飯	盤	否	彼	悲	扉	批	疲	秘	肥
0D00	費	避	飛	尾	鼻	菱	筆	俵	氷	票	評	病	浜	貧	敏	夫
0D20	婦	富	怖	浮	父	符	腐	武	舞	封	風	服	福	腹	払	沸
0D40	噴	憤	奮	紛	丙	兵	幣	柄	米	壁	癖	偏	便	捕	募	墓
0D60	母	簿	宝	崩	捧	泡	胞	芳	訪	豊	飽	亡	傍	剖	妨	帽
0D80	忙	房	暴	望	紡	肪	膨	防	北	僕	撲	釦	没	翻	磨	魔
0DA0	幕	膜	迄	満	味	魅	脈	妙	民	務	夢	矛	迷	鳴	免	綿
0DC0	模	茂	毛	盲	網	黙	紋	冶	夜	野	矢	役	薬	躍	諭	輸
0DE0	優	友	遊	郵	融	誉	預	幼	揚	曜	洋	葉	陽	養	浴	翼
0E00	螺	来	頼	欄	陸	律	流	留	粒	旅	療	稜	林	臨	隣	涙
0E20	累	励	鈴	暦	歴	烈	裂	労	漏	老	六	脇	惑	詫	湾	腕
0E40	斡	椅	萎	宇	嘘	閲	宴	欧	懐	拐	涯	穫	閣	潟	渇	冠
0E60	患	汽	貴	鬼	偽	戯	欺	喫	窮	糾	拠	漁	恐	狂	脅	仰
0E80	緊	愚	遇	靴	啓	慶	憩	携	撃	傑	嫌	懸	厳	雇	娯	洪
0EA0	紅	耕	航	貢	挫	催	栽	崎	柵	拶	傘	志	施	旨	至	誌
0EC0	識	狩	趣	就	秀	衆	襲	蹴	充	渋	緒	署	諸	叙	掌	訟
0EE0	鐘	壌	織	紳	酔	瀬	誠	繊	漸	繕	塑	礎	阻	奏	族	惰
0F00	戴	諾	叩	旦	誕	恥	仲	宙	忠	抽	兆	懲	抵	敵	撤	党
0F20	盗	糖	陶	闘	督	馴	覇	媒	爆	縛	髪	閥	泌	匹	府	敷
0F40	仏	慕	縫	乏	霧	盟	勇	誘	踊	裸	雷	卵	里	隆	慮	虜
0F60	寮	塁	隷	霊	恋	浪	郎	功	坑	々	⇧	⇨	⌊	⌊•	⌊^	⌊>
0F80	`	a	b	c	d	e	f	g	h	i	j	k	l	m	n	o	p	q	r	s	t	u	v	w	x	y	z	{	:	}	~	▨
0FA0	Б	Г	Д	Ж	З	И	Й	К	Л	М	П	У	Ф	Ц	Ч	Ш	Щ	Ъ	Ы	Ь	Э	Ю	Я	?	⌊+	◇	⌐
0FC0	À	Á	Ã	Â	Æ	Ç	È	É	Ê	Ë	Ì	Í	Î	Ï	Ò	Ó	Ô	Õ	Œ	Ø	Ù	Ú	Û	Ÿ	ß	à	á	â	ã	ä	å	æ
0FE0	Å	Ä	Ö	Ü	Ñ	¿	ç	è	é	ê	ë	ì	í	î	ï	ñ	ò	ó	ô	õ	ö	œ	ø	ù	ú	û	ü	ÿ	¡	⌐

	00	02	04	06	08	0A	0C	0E	10	12	14	16	18	1A	1C	1E
1000	A	B	C	D	E	F	G	H	I	J	K	L	M	N	O	P
1020	Q	R	S	T	U	V	W	X	Y	Z	a	b	c	d	e	f
1040	g	h	i	j	k	l	m	n	o	p	q	r	s	t	u	v
1060	w	x	y	z	∥				γ	ε	μ	π	φ	ω	Δ	Σ
1080	Ω								ガ	ギ	グ	ゲ	ゴ	ザ	ジ	ズ	ゼ	ゾ	ダ	ヂ	ヅ	デ	ド
10A0	バ	ビ	ブ	ベ	ボ	パ	ピ	プ	ペ	ポ	ヴ	ヵ	ヶ		ァ	ア	ィ	イ	ゥ	ウ	ェ	エ
10C0	ォ	オ	カ	ガ	キ	ギ	ク	グ	ケ	ゲ	コ	ゴ	サ	ザ	シ	ジ
10E0	ス	ズ	セ	ゼ	ソ	ゾ	タ	ダ	チ	ヂ	ッ	ツ	ヅ	テ	デ	ト
1100	ド	ナ	ニ	ヌ	ネ	ノ	ハ	バ	パ	ヒ	ビ	ピ	フ	ブ	プ	ヘ
1120	ベ	ペ	ホ	ボ	ポ	マ	ミ	ム	メ	モ	ャ	ヤ	ュ	ユ	ョ	ヨ
1140	ラ	リ	ル	レ	ロ	ヮ	ワ	ヲ	ン	ヴ	ヵ	ヶ	◁	▷	☜	▦
1160	―	、	。	，	．	・	：	；	？	！	゛	゜	´	｀	¨	＾
1180	￣	＿	ヽ	ヾ	ゝ	ゞ	〃	仝	々	〆	○	ー	―	‐	／	＼
11A0	～	‖	｜	…	‥	‘	’	“	”	（	）	〔	〕	［	］	｛
11C0	｝	〈	〉	《	》	「	」	『	』	【	】	＋	－	±	×	÷
11E0	＝	≠	＜	＞	≦	≧	∞	∴	♂	♀	°	′	″	℃	￥	＄
1200	¢	£	％	＃	＆	＊	＠	§	☆	★	○	●	◎	◇	◆	□
1220	■	△	▲	▽	▼	※	〒	→	←	↑	↓	＝	▢	⛰	⇨	⇔
1240	1/1	2/2	3/3	4/4	5/5	6/6	◁	▯▯	mm	cm	km	cm²	m²	km²	cm³	m³
1260	mg	kg	cc	dℓ	ℓ	kℓ	ms	μs	ns	HP	ps	Hz	㈱	©		
1280	亜	芦	尉	壱	逸	芋	姻	韻	詠	疫	悦	謁	猿	殴	翁	虞
12A0	卸	嫁	禍	彦	蚊	餓	悔	塊	戒	嚇	岳	樫	喝	褐	轄	且
12C0	勘	堪	棺	款	憾	艦	頑	忌	紀	飢	棋	宜	儀	吉	虐	朽
12E0	凶	峡	恭	矯	暁	斤	桐	菌	謹	襟	吟	隈	勲	薫	恵	渓
1300	蛍	鶏	鯨	遣	賢	繭	顕	玄	孤	枯	鼓	呉	悟	碁	后	恒
1320	皇	慌	酵	拷	豪	獄	昆	恨	紺	魂	墾	懇	佐	唆	詐	宰
1340	斎	歳	搾	桟	蚕	惨	暫	氏	司	祉	肢	嗣	飼	雌	賜	諮
1360	児	侍	滋	慈	璽	疾	執	漆	舎	赦	遮	邪	蛇	勺	酌	爵
1380	寂	朱	珠	儒	囚	州	宗	拾	愁	酬	醜	汁	銃	獣	叔	淑
13A0	粛	塾	俊	旬	准	殉	循	潤	遵	庶	如	徐	升	召	匠	肖
13C0	償	抄	昌	晶	松	沼	宵	症	祥	硝	粧	詔	彰	礁	丈	冗
13E0	畳	嬢	譲	醸	殖	嘱	辱	臣	娠	慎	薪	仁	迅	甚	尋	炊

	00	02	04	06	08	0A	0C	0E	10	12	14	16	18	1A	1C	1E
1400	婿	租	賊	畜	坪	渡	屯	漠	逝	祖	憎	稚	漬	斗	篤	迫
1420	牲	禅	霜	痴	津	澱	匿	伯	斉	薦	藻	壇	鎮	徹	童	賠
1440	姓	遷	燥	鍛	陳	哲	洞	陪	砕	銭	槽	胆	朕	送	騰	培
1460	菅	践	遭	丹	勅	提	豆	梅	崇	仙	僧	但	聴	偵	謄	輩
1480	枢	摂	葬	沢	潮	遁	搭	俳	髄	窃	喪	瀧	眺	艇	塔	婆
14A0	随	拙	曹	逮	弔	帝	唐	寧	蛮	賦	抱	麻	癒	濫	麗	緞
14C0	錘	惜	桑	泰	著	貞	痘	忍	妃	附	俸	妹	唯	吏	廉	鐡
14E0	豚	尼	桃	弟	窒	駄	亡	衰	夕	疎	壮	舵	嫡	邸	悼	弐
1500	鉢	苗	塀	謀	眠	羊	猟	賄	伐	猫	弊	朴	娘	庸	陵	國
1520	帥	脆	措	孫	逐	呈	奴	豚	披	譜	砲	埋	幽	痢	錬	靱
1540	披	侮	褒	又	悠	履	炉	靖	碑	覆	坊	抹	猶	柳	露	槻
1560	姫	墳	冒	漫	雄	硫	廊	郁	罷	雰	某	慢	裕	竜	朗	浩
1580	漂	陛	貿	岬	憂	涼	楼									
15A0																
15C0																
15E0																

2 LCD–MOUNTED TYPE *i* SERIES HARDWARE

This chapter describes the printed–circuit board in the *i* series CNC control unit of LCD–mounted type and the functions of the card PCBs mounted on the printed–circuit board. It also explains how to replace consumables.

2.1 STRUCTURE 165
2.2 OVERVIEW OF HARDWARE 166
2.3 TOTAL CONNECTION DIAGRAMS 170
2.4 CONFIGURATION OF PRINTED CIRCUIT BOARD CONNECTORS AND CARDS 175
2.5 LIST OF UNITS AND PRINTED CIRCUIT BOARDS 221
2.6 REPLACING THE MOTHERBOARD 229
2.7 REPLACING FUSE ON CONTROL UNIT 231
2.8 REPLACING BATTERY 232
2.9 REPLACING FAN MOTORS 236
2.10 REPLACING LCD BACKLIGHT 239
2.11 HEAT GENERATED IN EACH UNIT 243

2.1 STRUCTURE

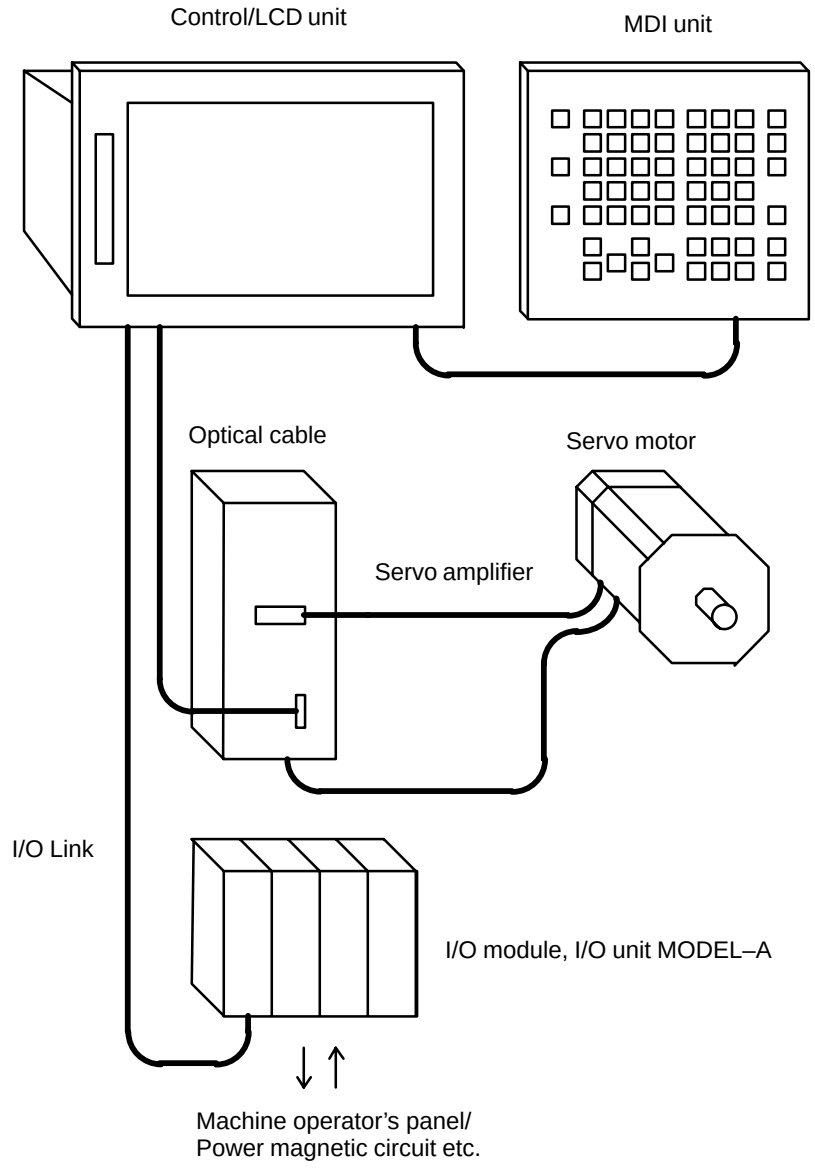

2.2 OVERVIEW OF HARDWARE

2.2.1 Series 16*i*/160*i*s

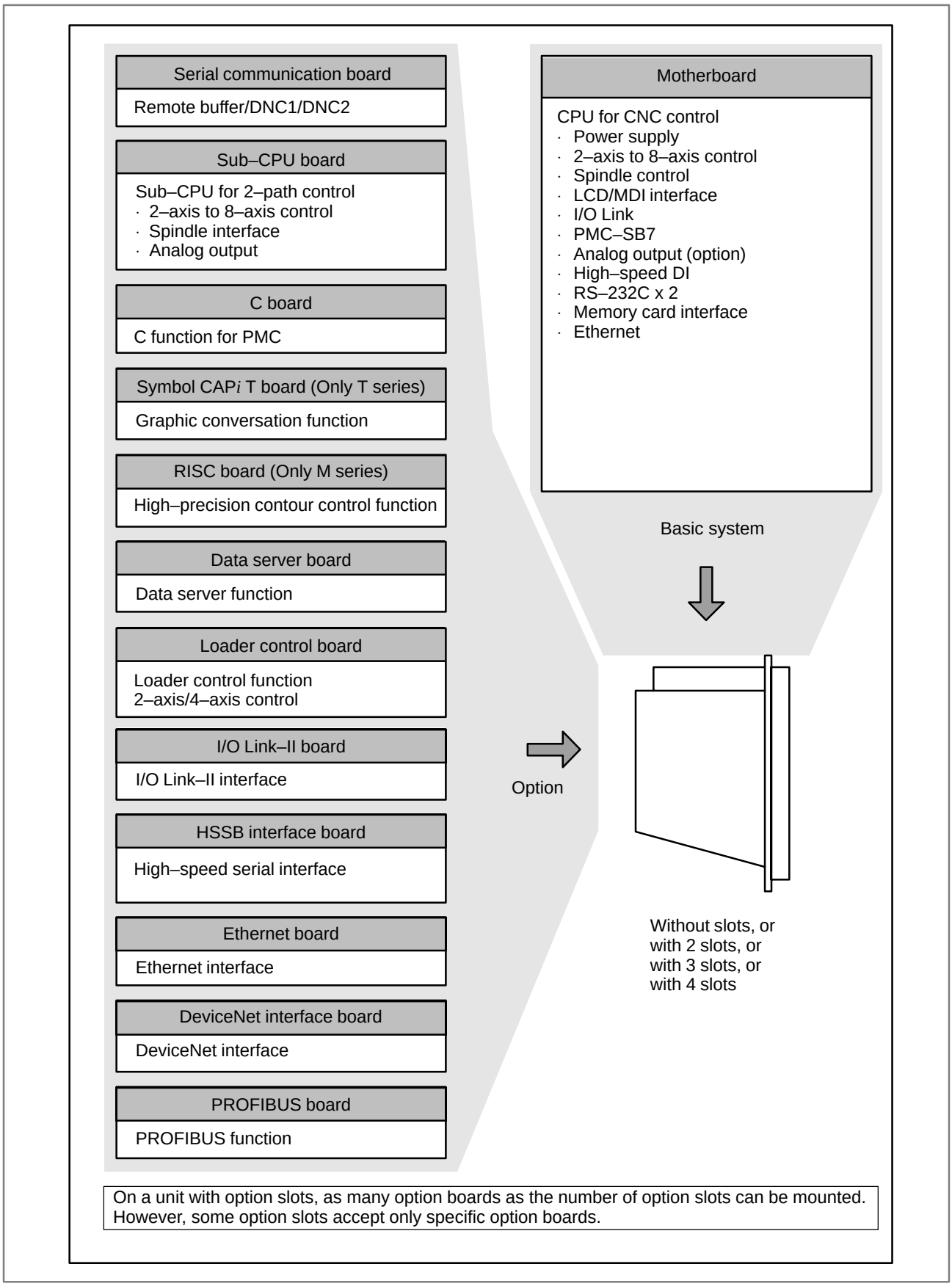
Serial communication board
Remote buffer/DNC1/DNC2
Sub–CPU board
Sub–CPU for 2–path control
· 2–axis to 8–axis control
· Spindle interface
· Analog output
C board
C function for PMC
Symbol CAP*i* T board (Only T series)
Graphic conversation function
RISC board (Only M series)
High–precision contour control function
Data server board
Data server function
Loader control board
Loader control function
2–axis/4–axis control
I/O Link–II board
I/O Link–II interface
HSSB interface board
High–speed serial interface
Ethernet board
Ethernet interface
DeviceNet interface board
DeviceNet interface
PROFIBUS board
PROFIBUS function
Motherboard
CPU for CNC control
· Power supply
· 2–axis to 8–axis control
· Spindle control
· LCD/MDI interface
· I/O Link
· PMC–SB7
· Analog output (option)
· High–speed DI
· RS–232C x 2
· Memory card interface
· Ethernet
Basic system
Option
Without slots, or
with 2 slots, or
with 3 slots, or
with 4 slots
On a unit with option slots, as many option boards as the number of option slots can be mounted.
However, some option slots accept only specific option boards.

2.2.2
Series 18*i*/180*i*s

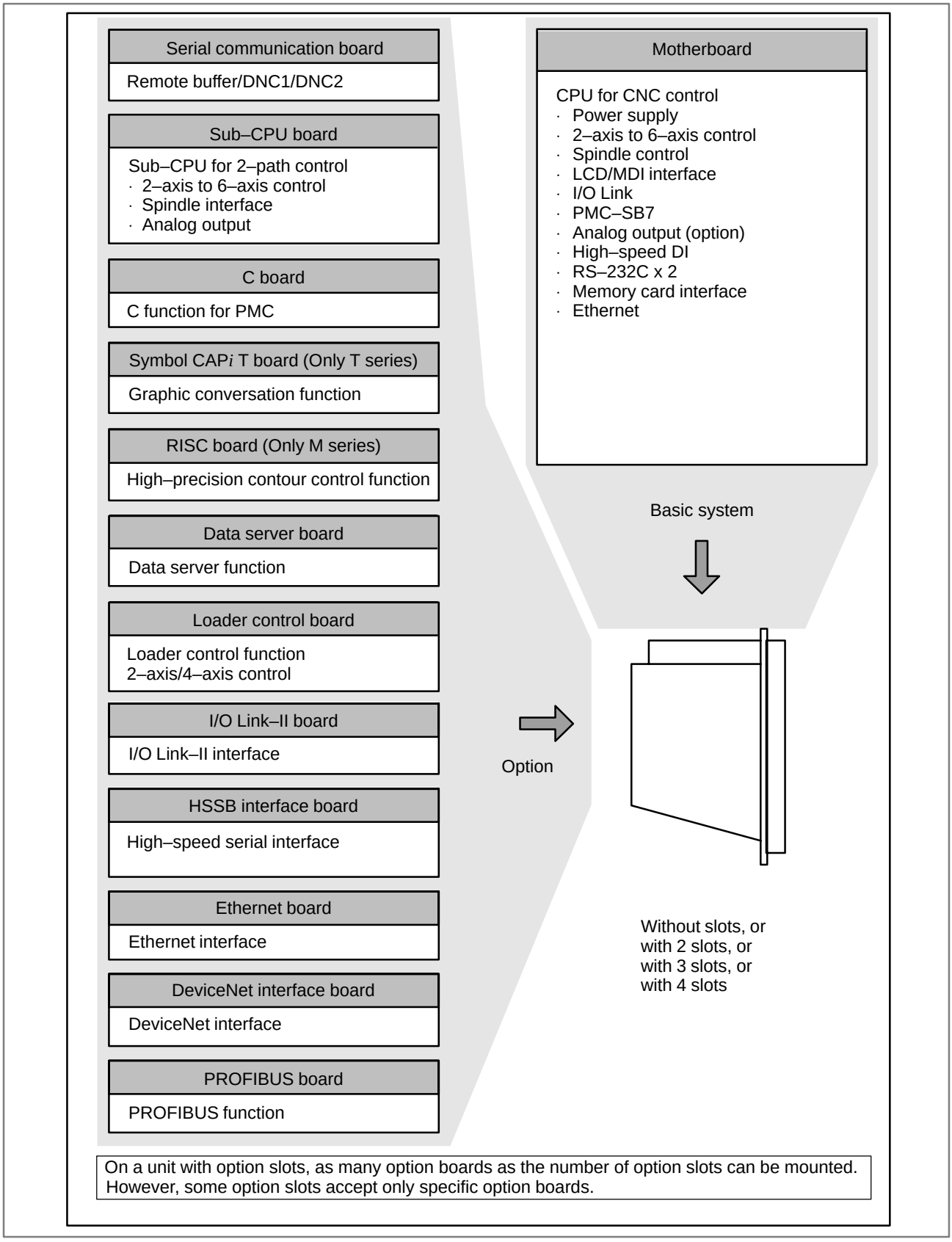

2.2.3
Series 21*i*/210*i*s

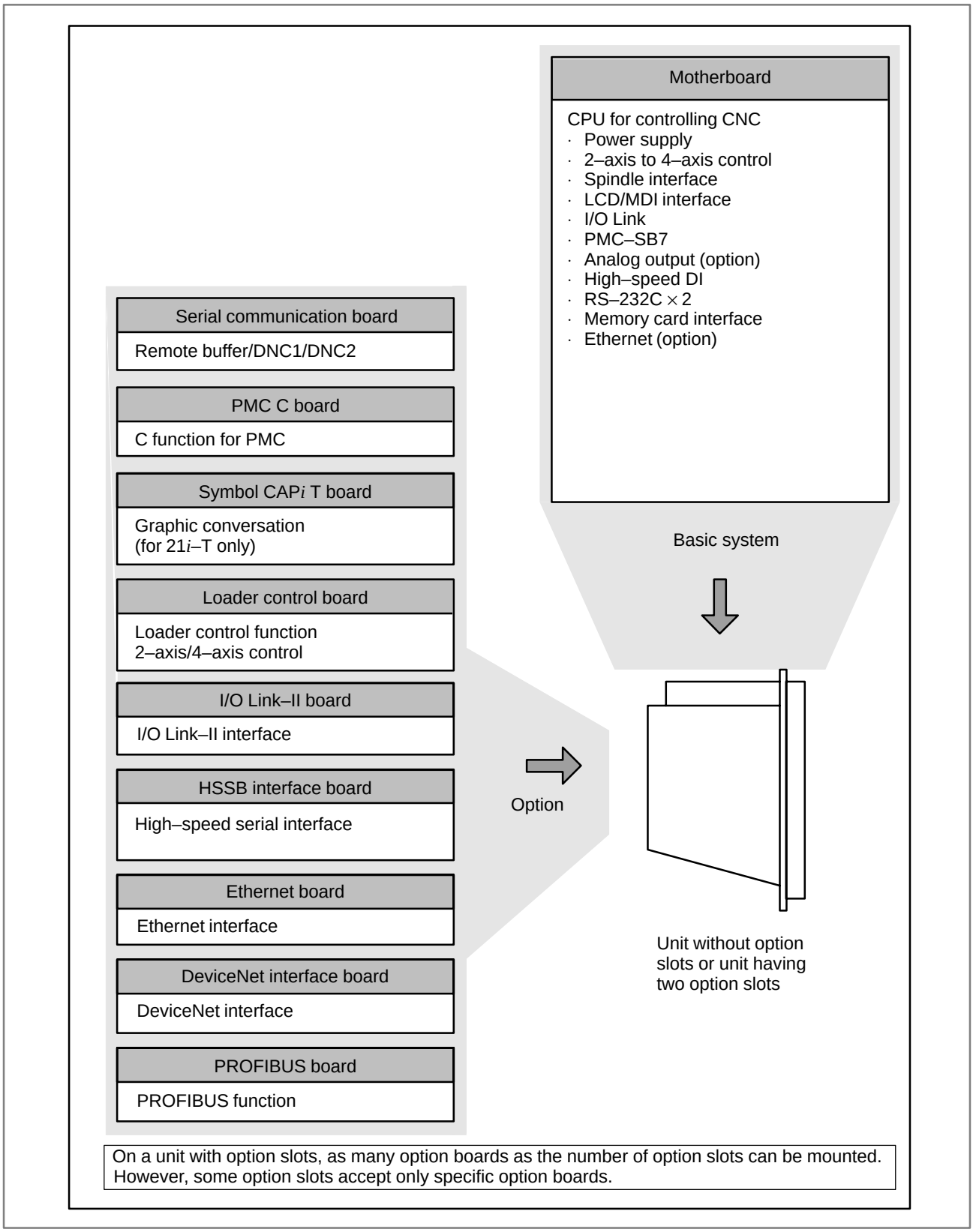

2.3 TOTAL CONNECTION DIAGRAMS

Common to 16*i*/18*i*/21*i*/160*is*/180*is*/210*is*

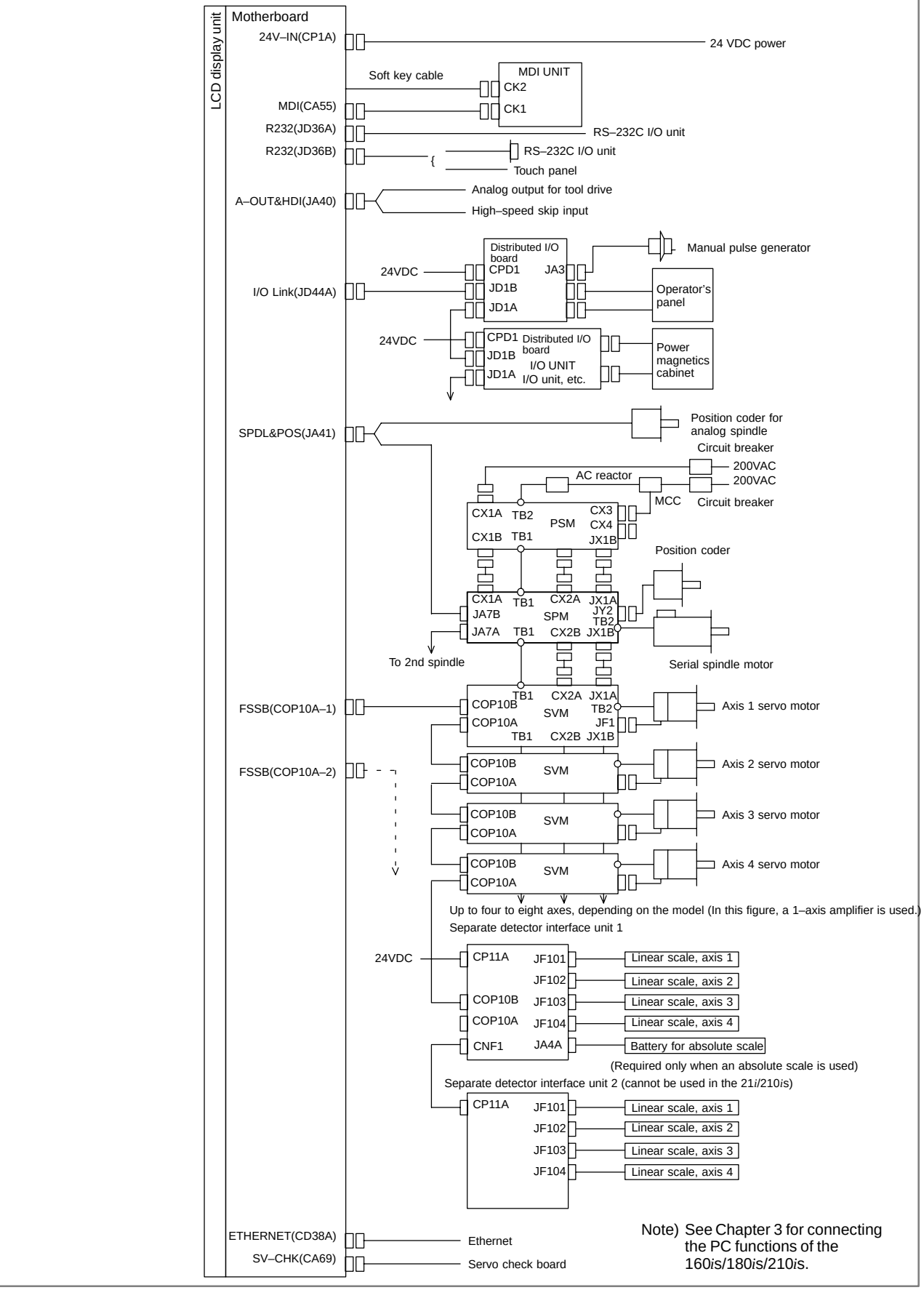

Note) See Chapter 3 for connecting the PC functions of the 160*is*/180*is*/210*is*.

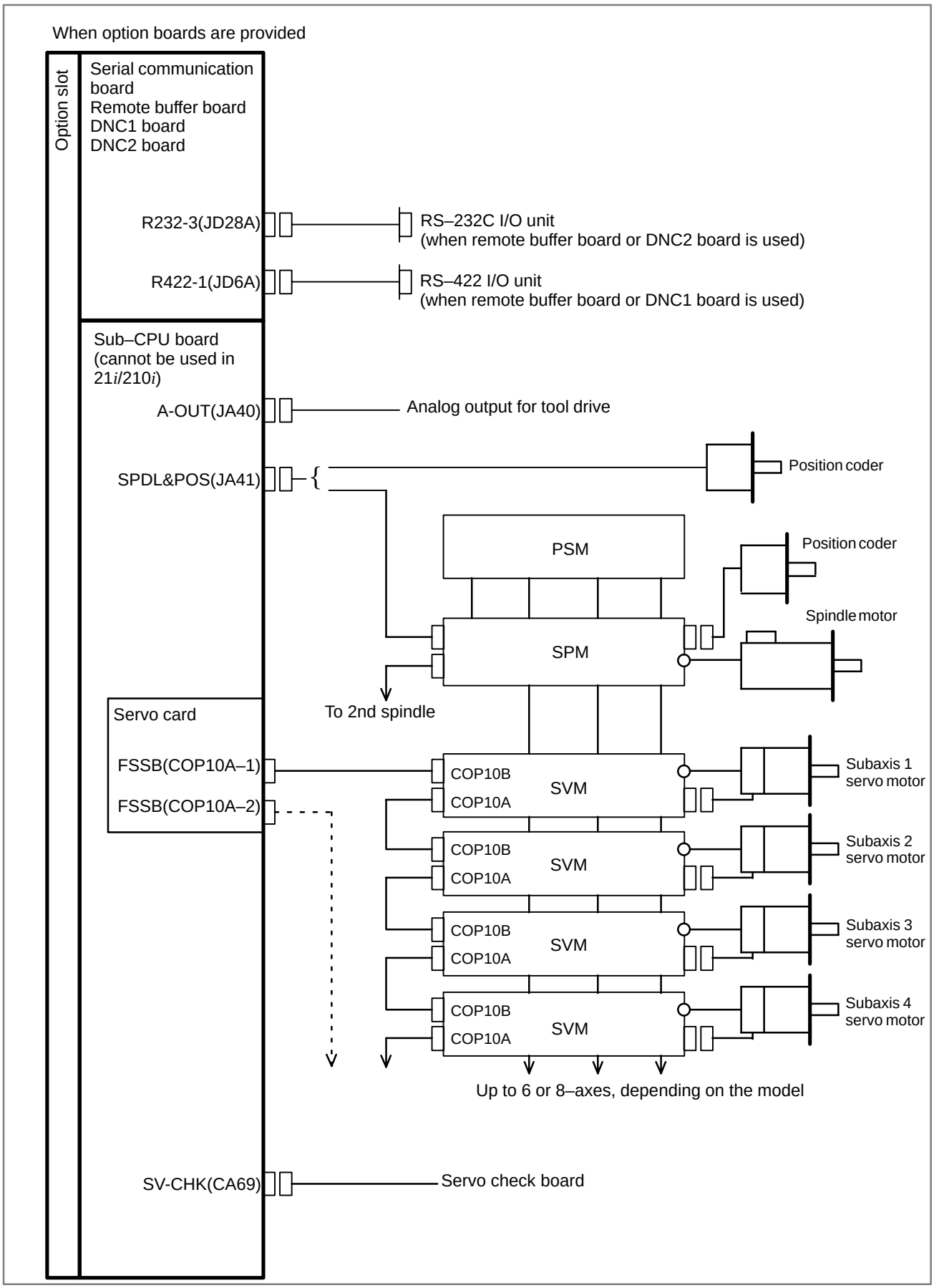
When option boards are provided
Option slot
Serial communication board
Remote buffer board
DNC1 board
DNC2 board
R232-3(JD28A)
RS–232C I/O unit
(when remote buffer board or DNC2 board is used)
R422-1(JD6A)
RS–422 I/O unit
(when remote buffer board or DNC1 board is used)
Sub–CPU board
(cannot be used in 21*i*/210*i*)
A-OUT(JA40)
Analog output for tool drive
SPDL&POS(JA41)
Position coder
PSM
Position coder
Spindle motor
SPM
To 2nd spindle
Servo card
FSSB(COP10A–1)
FSSB(COP10A–2)
COP10B
COP10A
SVM
Subaxis 1 servo motor
Subaxis 2 servo motor
Subaxis 3 servo motor
Subaxis 4 servo motor
Up to 6 or 8–axes, depending on the model
SV-CHK(CA69)
Servo check board

When option boards are provided

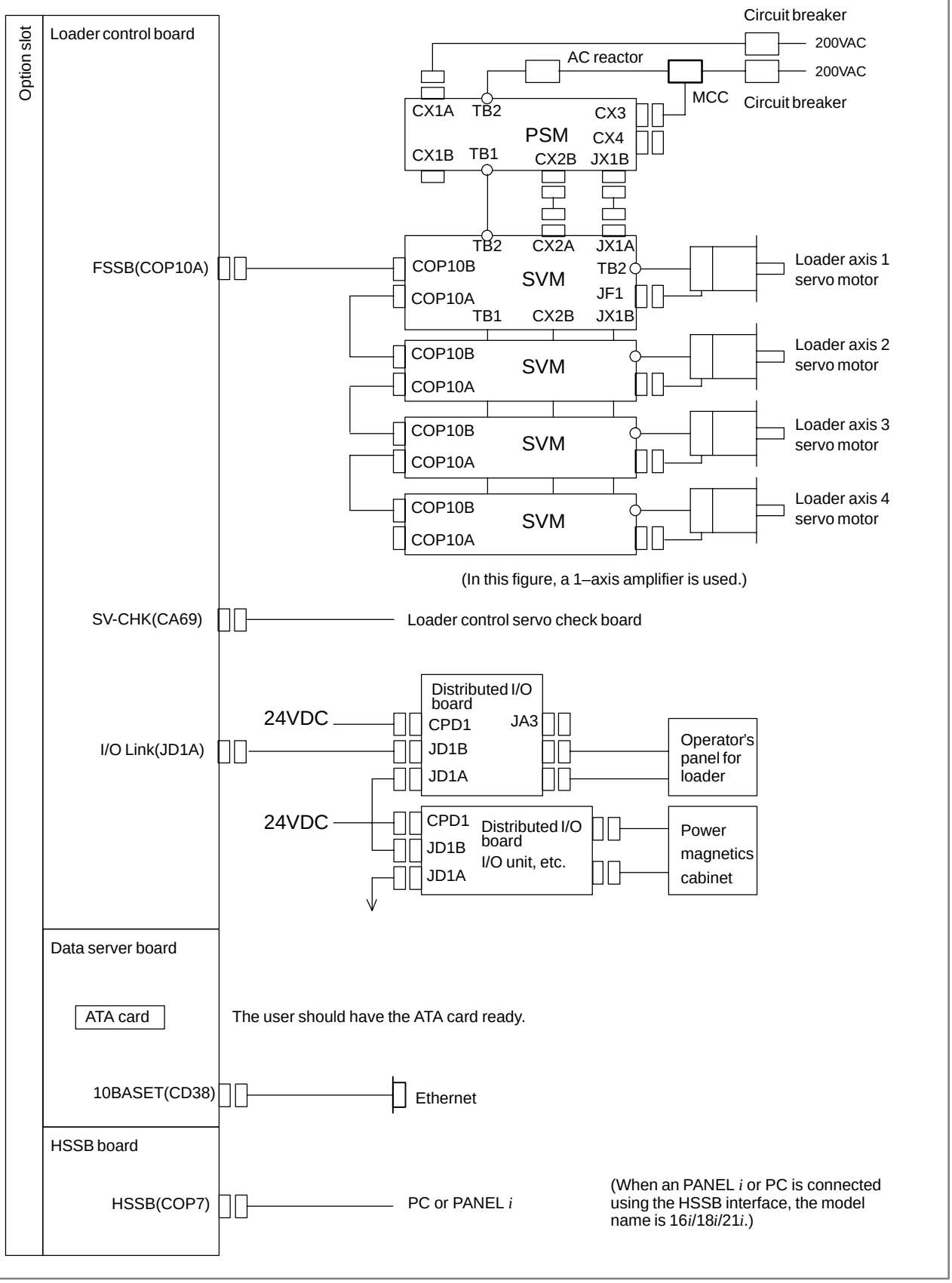

When option boards are provided

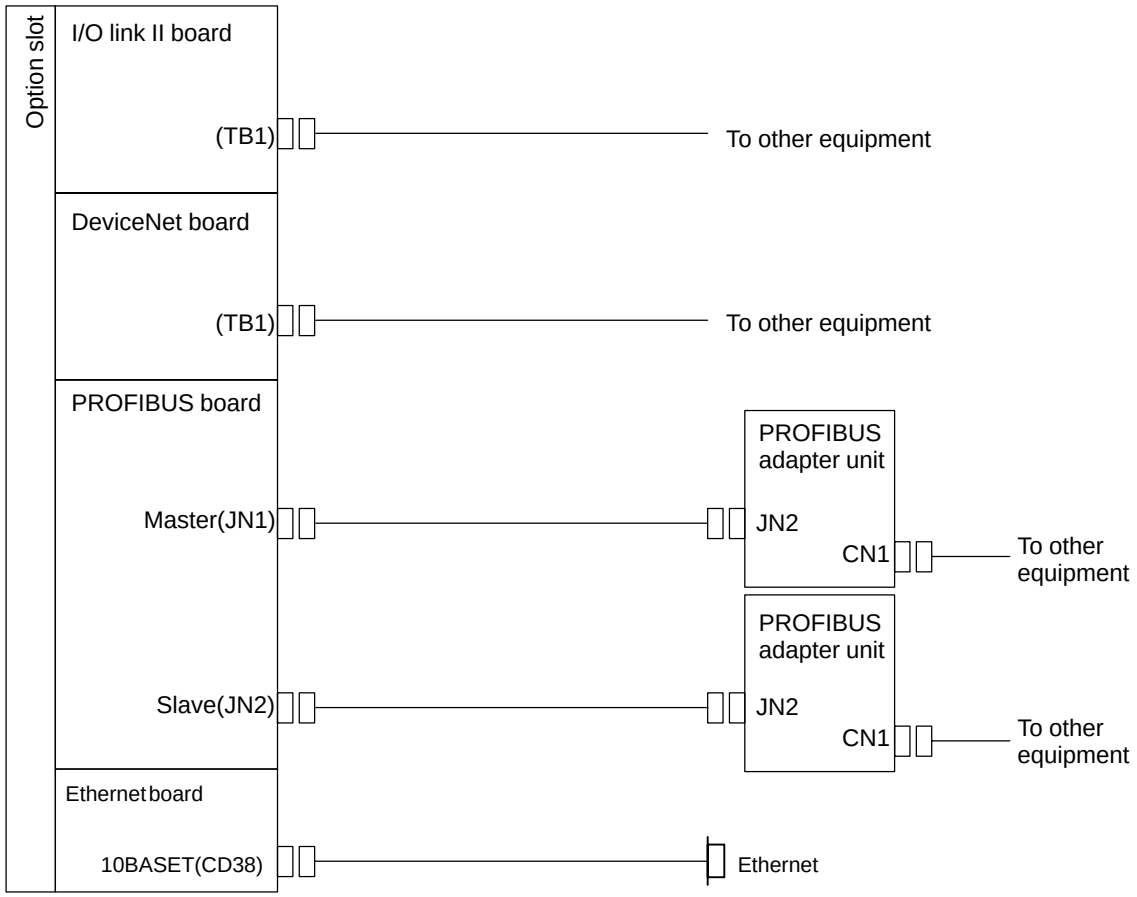

2.4 CONFIGURATION OF PRINTED CIRCUIT BOARD CONNECTORS AND CARDS

2.4.1 FS16*i*/18*i*/21*i* Motherboard

- **Specification**

Name	Specification
Series 16*i*	A20B–8100–0660
Series 18*i*	A20B–8100–0661
Series 21*i* (without Ethernet function, PMC–SA1)	A20B–8100–0662
Series 21*i* (without Ethernet function, PMC–SB7)	A20B–8100–0663
Series 21*i* (with Ethernet function, PMC–SA1)	A20B–8100–0664
Series 21*i* (with Ethernet function, PMC–SB7)	A20B–8100–0665

- **Connector mounting location**

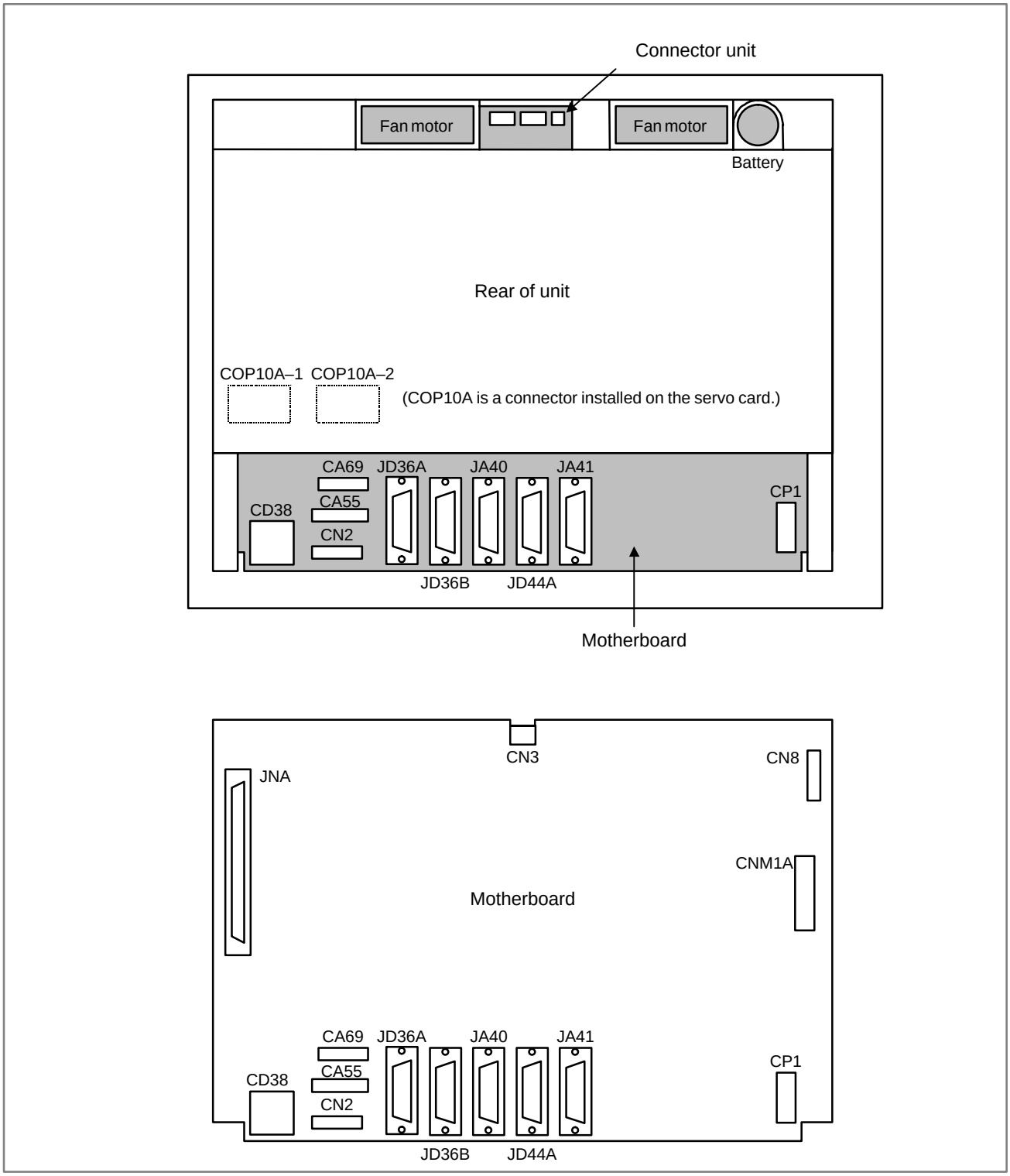

Connector number	Application
COP10A–1, COP10A–2	Servo amplifier (FSSB)
CA55	MDI
CA69	Servo check
JD36A	RS–232C serial port
JD36B	RS–232C serial port
JA40	Analog output/high–speed DI
JD44A	I/O link
JA41	Serial spindle/position coder
CP1	24VDC–IN
JNA	F–BUS interface
CN8	Video signal interface
CNM1A	PCMCIA interface
CN2	Soft key
CN3	Inverter
CD38A	Ethernet

- **Card and power supply mounting location**

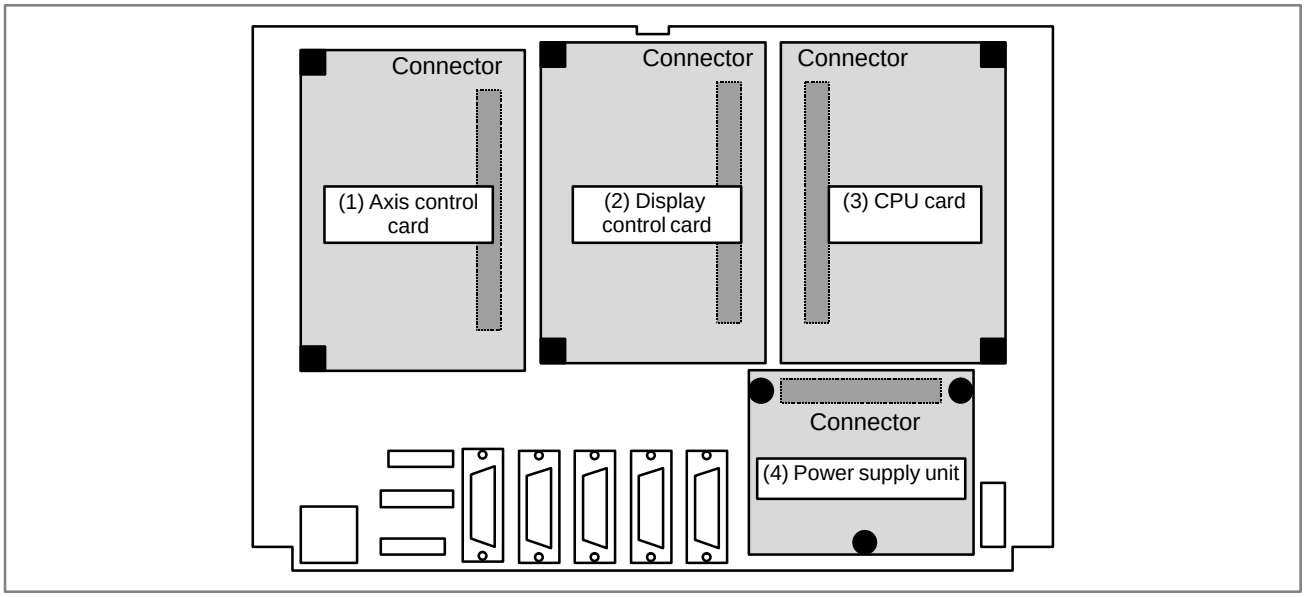

No.	Name	Specification	Function	Remarks
(1)	Axis control card	A20B–3300–0033	Axis control 2 axes	Applicable servo software: Series 9090 (21*i*)
		A20B–3300–0032	Axis control 4 axes	
		A20B–3300–0243	Axis control 2 axes	Applicable servo software: Series 90B0
		A20B–3300–0242	Axis control 4 axes	
		A20B–3300–0241	Axis control 6 axes	
		A20B–3300–0240	Axis control 8 axes	
		A20B–3300–0248	Axis control 4 axes	Applicable servo software: Series 90B0 (High–speed HRV)
		A20B–3300–0245	Axis control 6 axes	
		A20B–3300–0244	Axis control 8 axes	
		A20B–3300–0246	Learning–control axis control	Applicable servo software: Series 90B3/90B7
		A20B–3300–0247	Learning–control axis control	Applicable servo software: Series 90B3/90B7 (High–speed HRV)

No.	Name	Specification	Function	Remarks
(2)	Display control card	A20B–3300–0280	10.4″ color LCD with graphic function and embedded ethernet	Graphic software 60V6 series, embedded Ethernet control software series 656A
		A20B–3300–0281	8.4″ color LCD with graphic function and embedded ethernet	
		A20B–3300–0282	9.5″ monochrome LCD with graphic function and embedded ethernet	
		A20B–3300–0283	7.2″ monochrome LCD with graphic function and embedded ethernet	
		A20B–3300–0300	9.5″ monochrome LCD with embedded ethernet	Embedded Ethernet control software series 656A
		A20B–3300–0301	7.2″ monochrome LCD with embedded ethernet	
		A20B–3300–0302	9.5″ monochrome LCD	
		A20B–3300–0303	7.2″ monochrome LCD	
(3)	CPU card	A20B–3300–0310	DRAM 16MB for Series 16*i*/18*i*	
		A20B–3300–0311	DRAM 32MB for Series 16*i*/18*i*	
		A20B–3300–0291	DRAM 16MB for Series 21*i*	
		A20B–3300–0290	DRAM 32MB for Series 21*i*	
		A20B–3300–0312	DRAM 16MB for Series 21*i*	When embedded ethernet function is used with Series 21*i*
		A20B–3300–0313	DRAM 32MB for Series 21*i*	
(4)	Power supply unit	A20B–8100–0720		

- **DIMM module mounting location**

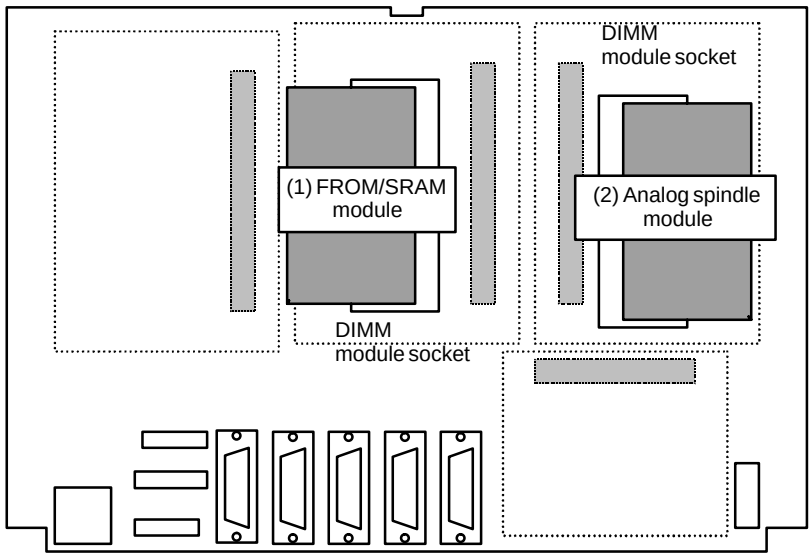

No.	Name	Specification	Function	Remarks
(1)	FROM/SRAM module	A20B–3900–0160	FROM 16MB SRAM 1MB	Various control software programs are stored in the FROM module. The SRAM is a battery–backed memory module.
		A20B–3900–0161	FROM 16MB SRAM 2MB	
		A20B–3900–0162	FROM 16MB SRAM 3MB	
		A20B–3900–0163	FROM 32MB SRAM 1MB	
		A20B–3900–0164	FROM 32MB SRAM 2MB	
		A20B–3900–0165	FROM 32MB SRAM 3MB	
		A20B–3900–0180	FROM 16MB SRAM 256kB	
		A20B–3900–0181	FROM 16MB SRAM 512kB	
		A20B–3900–0182	FROM 32MB SRAM 256kB	
		A20B–3900–0183	FROM 32MB SRAM 512kB	
(2)	Analog spindle module	A20B–3900–0170	Analog spindle position coder	

- **Block diagram**

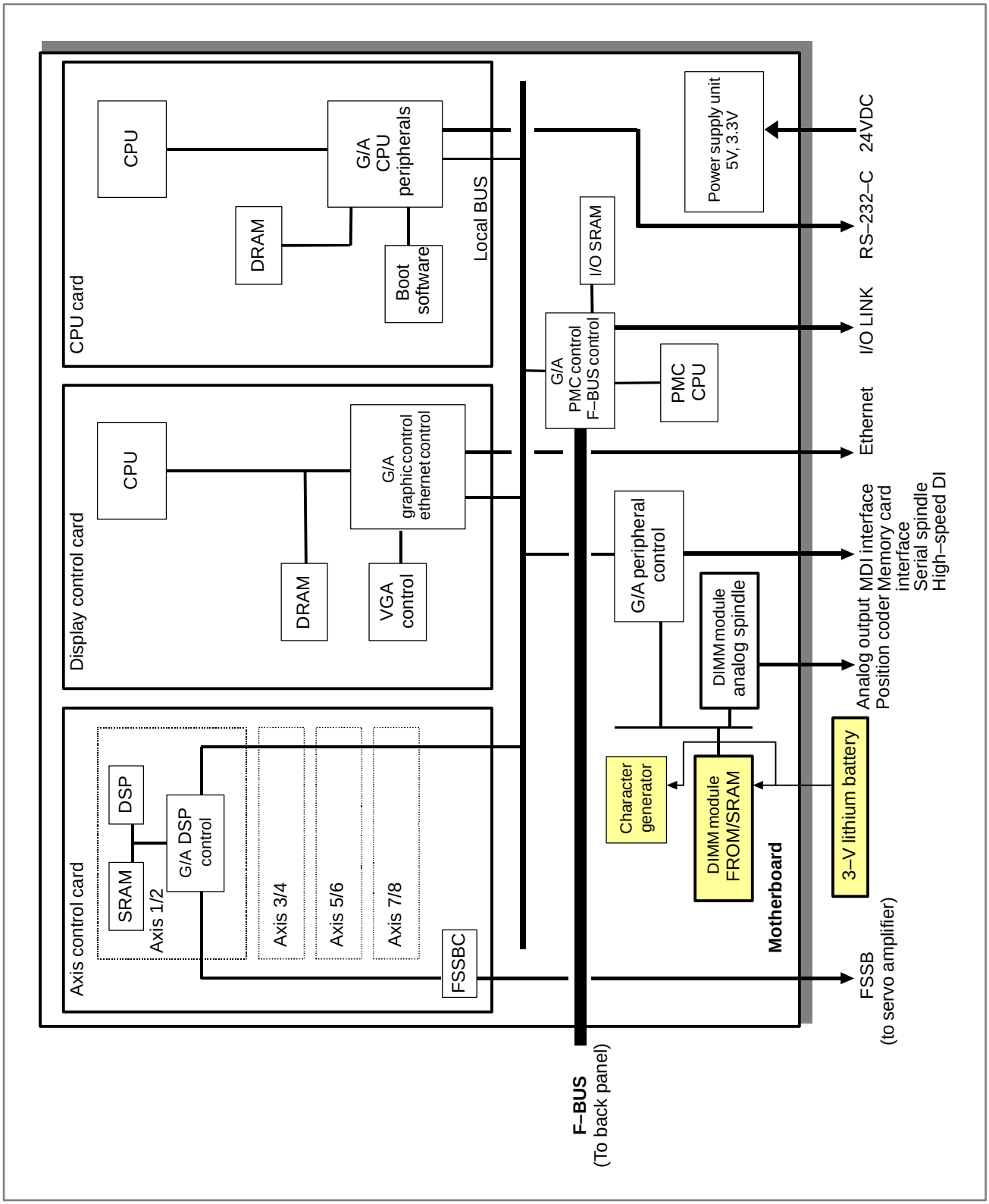

- **LED display**

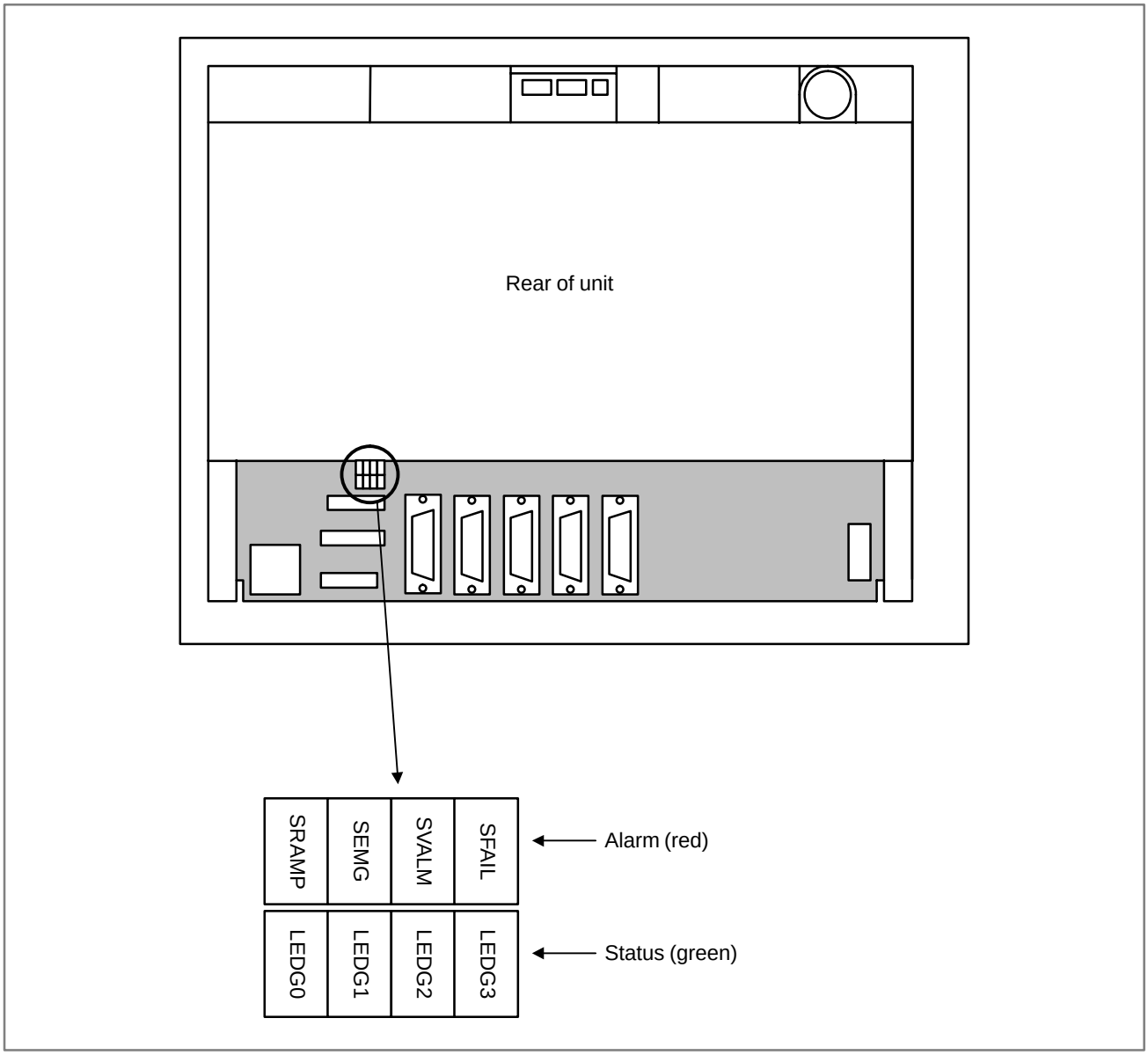
Rear of unit
SRAMP
SEMG
SVALM
SFAIL
Alarm (red)
LEDG0
LEDG1
LEDG2
LEDG3
Status (green)

(1) Changes in status LED (green) indication at power–on time

No.	Status LED	Status
1	□□□□	Power is not supplied.
2	■■■■	Initial status immediately after power is switched on; boot is running.
3	□■■■	System activation started.
4	■□■■	Waiting for each processor ID in the system to be set up.
5	□□■■	Each processor ID in the system has been set up.
6	■■□■	FANUC bus initialized.
7	□■□■	PMC initialized.
8	■□□■	Information about the hardware configuration of each printed–circuit board in the system has been set up.
9	□□□■	PMC ladder initialized.
10	□■■□	Waiting for digital servo to be initialized.
11	■■■□	Digital servo initialized.
12	■□□□	Initialization is completed, and normal operation is in progress.

■: On □: Off

(2) Alarm LED (red) indication at system alarm occurrence
If any of these LEDs lights, it is likely that the hardware is defective.

Alarm LED	Meaning
SVALM	Servo alarm.
SEMG	Lights when a system alarm occurs. The hardware has detected a failure in the system.
SFAIL	Lights when a system alarm occurs. Used by the software to stop the system. Lights while boot is under way.
SRAMP	RAM parity or ECC alarm.

2.4.2 Inverter PCBs and Connector Units

Name		Specification
Inverter P.C.B	For monochrome LCD	A20B–8100–0710
	For 10.4″ color LCD	A20B–8001–0920
	For 8.4″ color LCD	A20B–8001–0922
Connector unit	For unit with no option slot	A15L–0001–0060#B
	For unit with two option slots	A15L–0001–0060#A
	For unit with three or four option slots	A15L–0001–0060#C

NOTE
The connector unit is fastened to the case with self–tapping screws.

- **Connector mounting location**

(1) With 3 or 4 slots

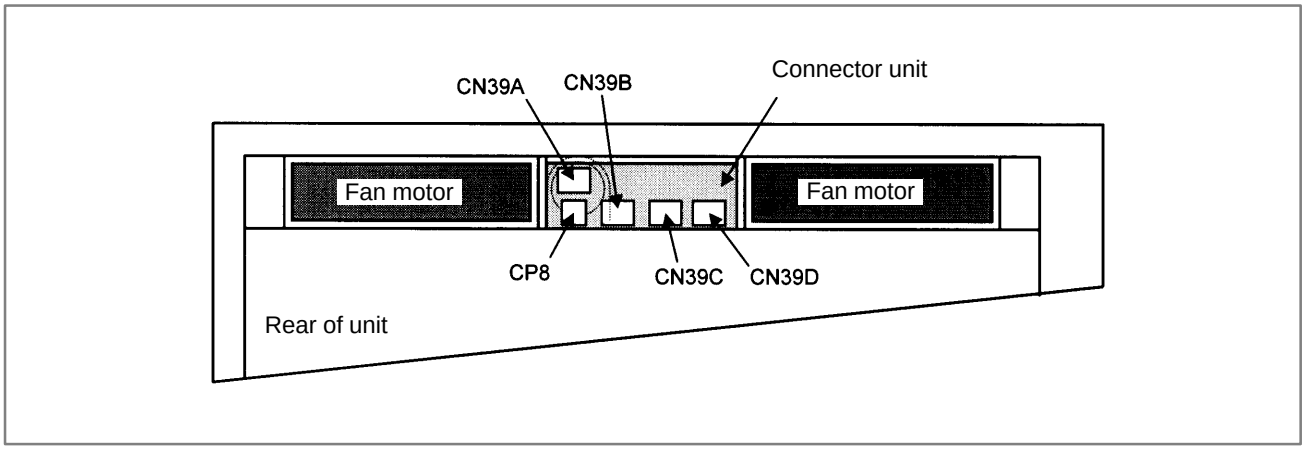

(2) With 2 slots

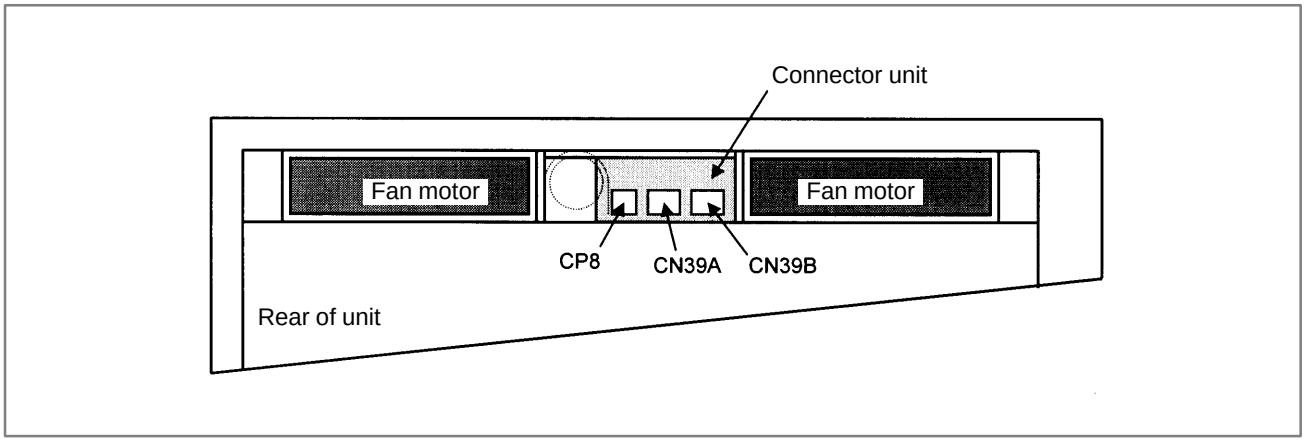

(3) With no slot

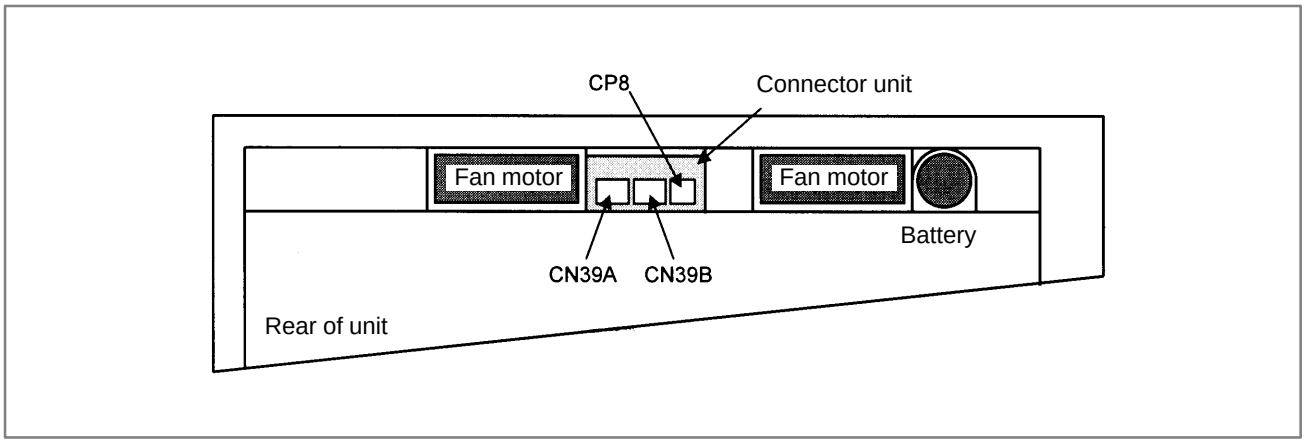

- **Connector location (printed–circuit board)**

(1) Inverter PCB

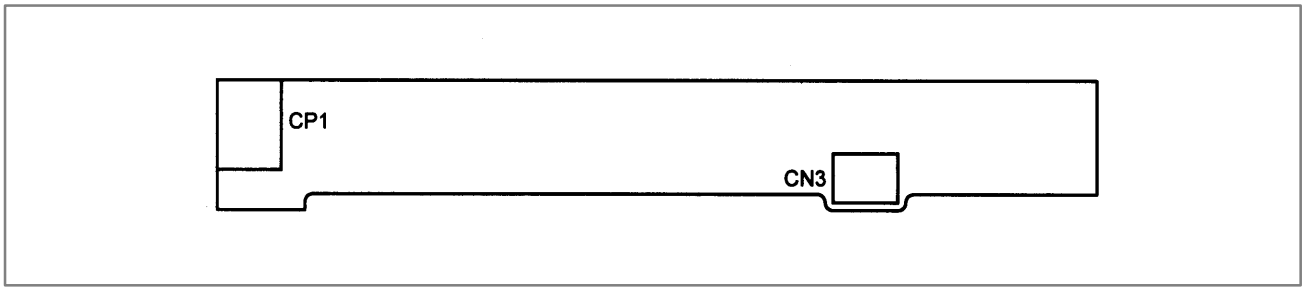

(2) Connector unit for no slot type

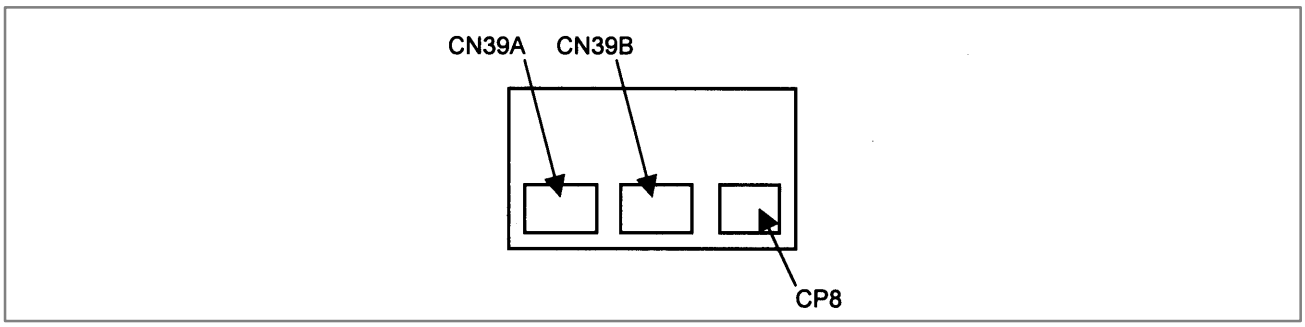

(3) Connector unit for 2–slot type

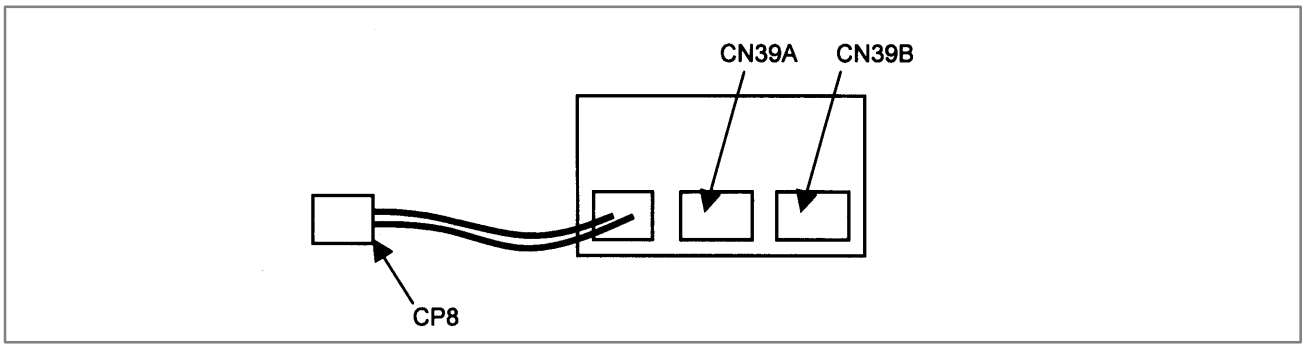

(4) Connector unit for 3–slot and 4–slot types

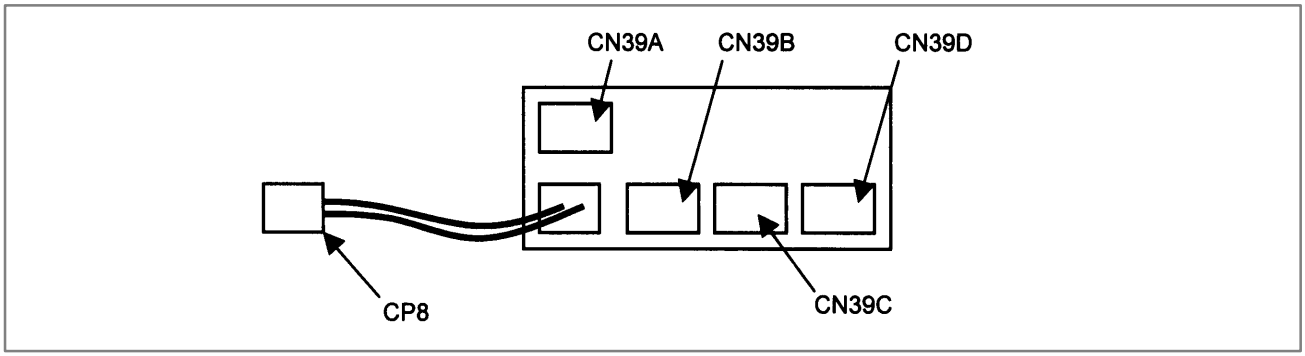

Connector number	Application
CN39A	Power supply for fans
CN39B	
CN39C	
CN39D	
CP8	Battery
CP1	Power supply for LCD backlight
CN3	Power supply for inverter PCB

2.4.3 C Board, Serial Communication Board, Symbol CAP*i* T Board, and PMC–RE Board

- **Specification**

Name		Specification
C board		A20B–8100–0261
Serial communication board A	Remote buffer/DNC2	A20B–8100–0262
Serial communication board B	DNC1	A20B–8100–0263
Symbol CAP*i* T board		A20B–8100–0264
PMC–RE board		A20B–8100–0150

NOTE
The PMC–RE board cannot fit into any of the following slots.
- Center slot of a unit with 3 option slots
- Option slot farthest from the LCD in a unit with 4 option slots

- **Connector location**

(1) PMC–RE board

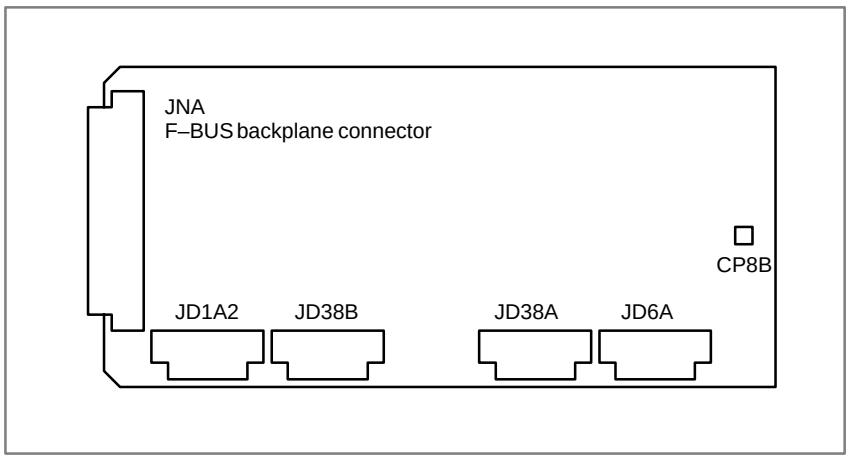

(2) C board

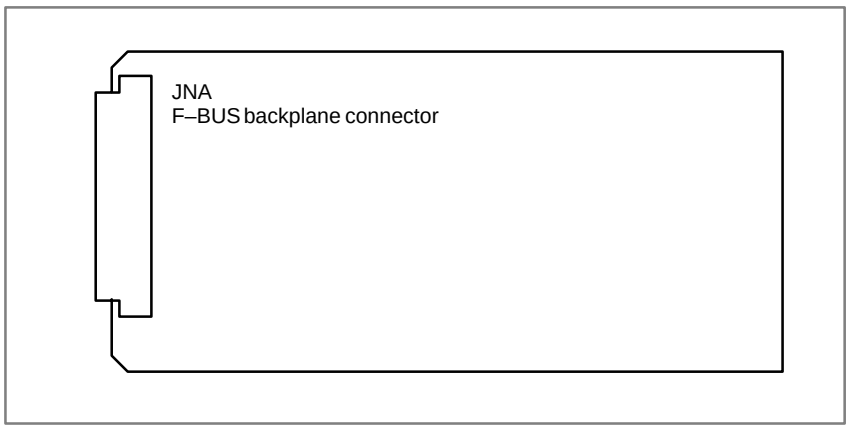

(3) Serial communication board A remote buffer/DNC2

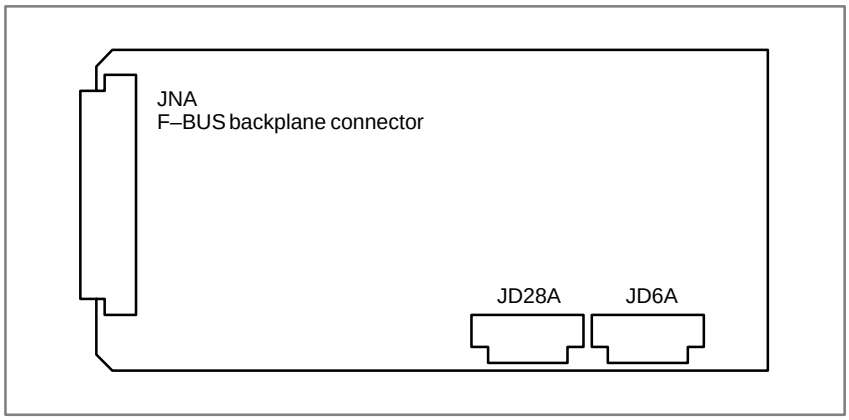

(4) Serial communication board B
DNC1

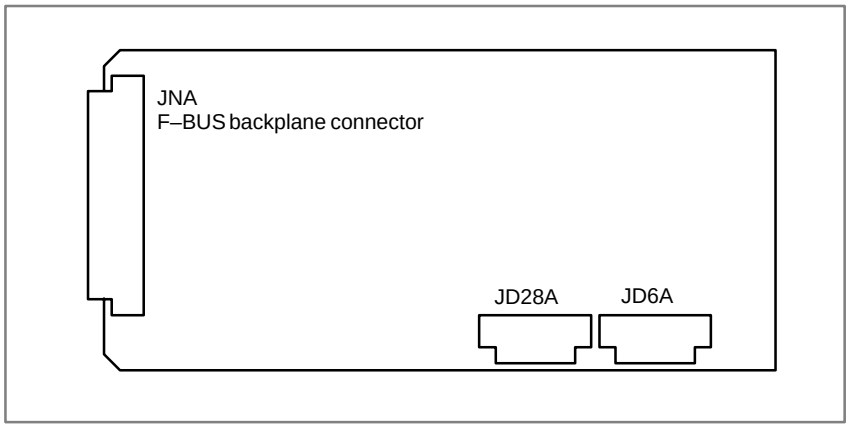

(5) CAP–II board/Symbol CAP*i* T board

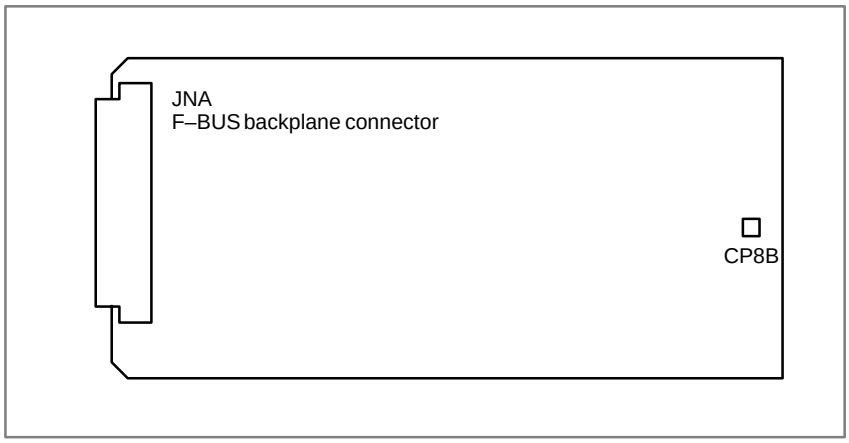

Connector number	Application
JD1A2	I/O link
JD38B	RS–232C serial port
JD38A	RS–232C serial port
JD28A	RS–232C serial port
JD6A	RS–422 serial port
CP8B	SRAM backup battery (Normally, the connector is not used. To keep the contents of SRAM with the printed circuit board removed, connect the battery to this connector.)

- **Card and DIMM module locations** PMC–RE board

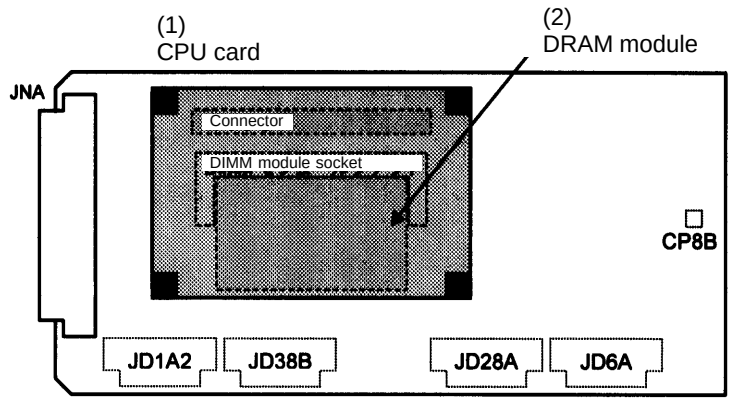

Note) The DRAM module is mounted on the CPU card.

C language board, serial communication board, Symbol CAP*i* T board

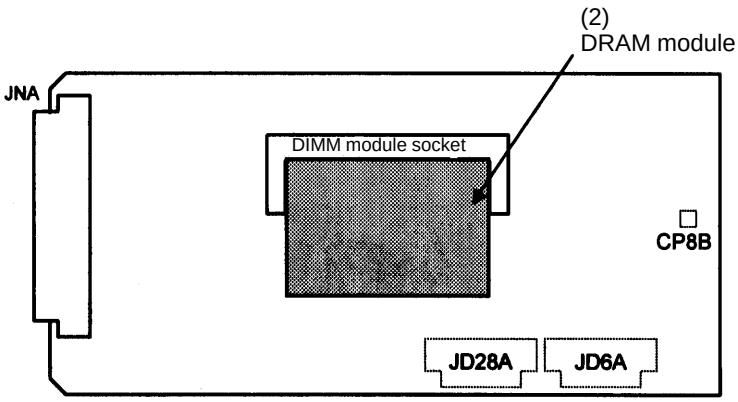

No.	Name	Specification	Function	Remarks
(1)	CPU card	A20B–3300–0070	PMC/communication/ conversational function	
(2)	DRAM module	A20B–3900–0042	DRAM for PMC/communication/ conversational function	4M/2M

- **Block diagram**

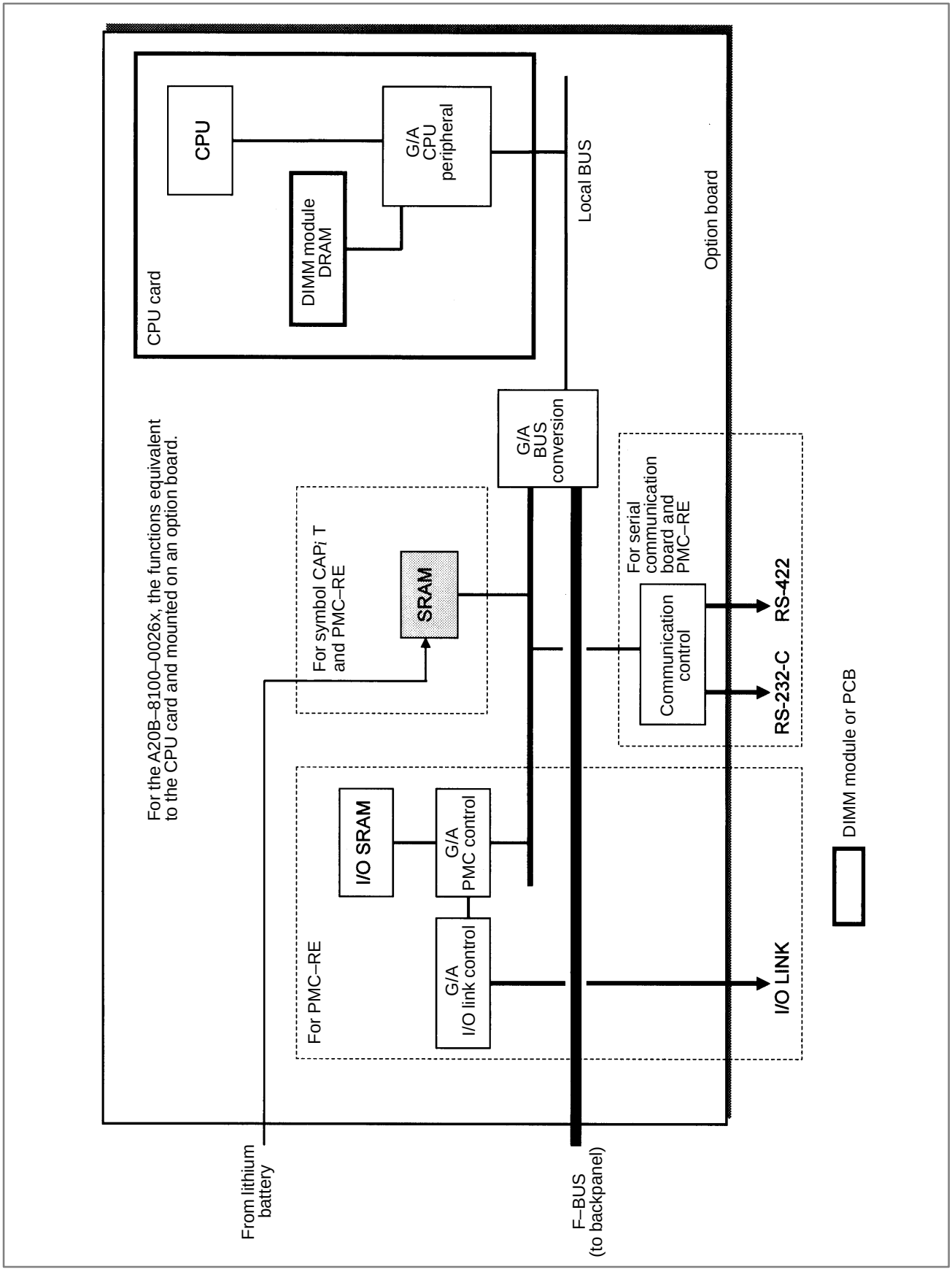

- **LED indication**

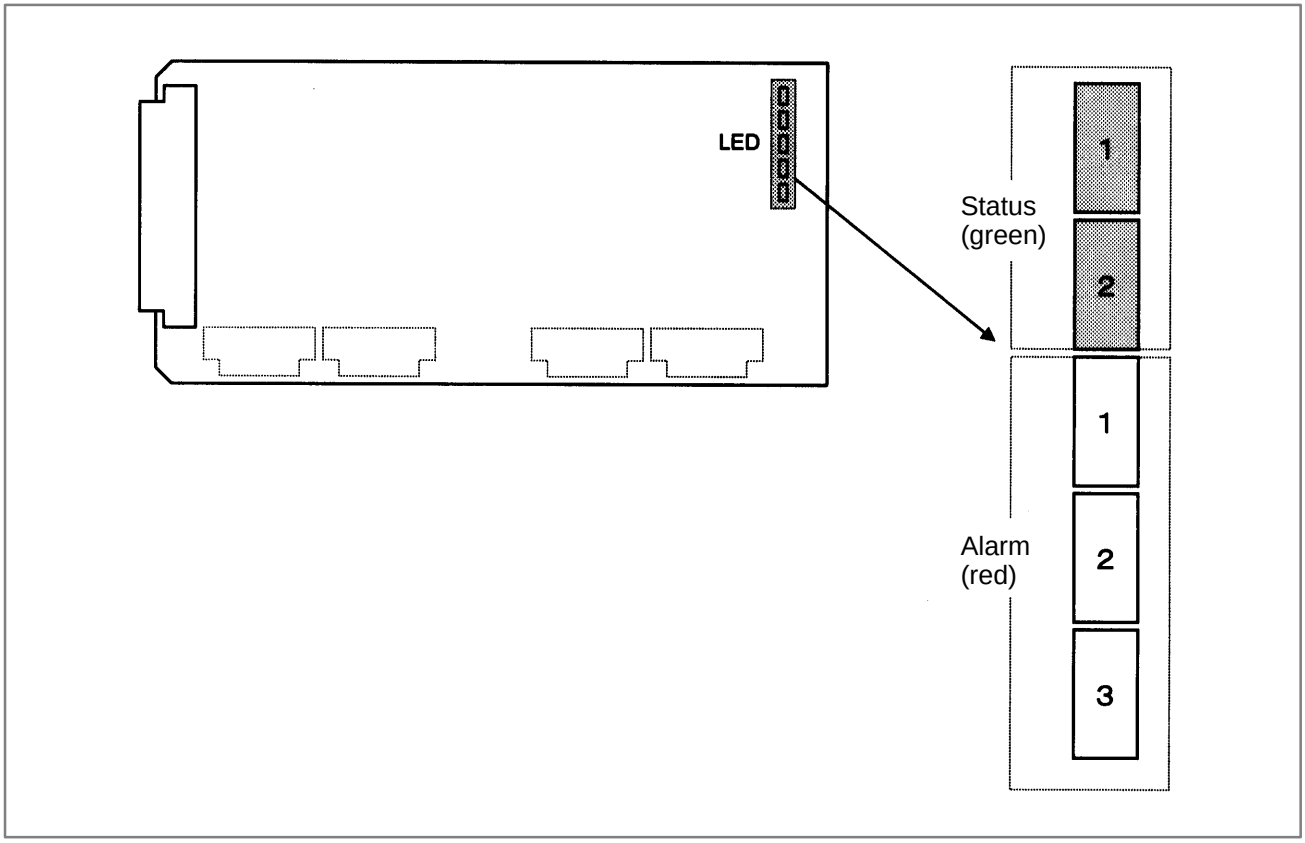

Alarm LED (red) indication at system alarm occurrence

Alarm: 1 2 3	Cause
□□□	Usual operation under way
■□□	Bus error (L–bus alarm)
□■□	Bus error or DRAM parity (L–bus EMG)
■■□	Reset under way
□□■	I/O link error
■□■	(Reserved)
□■■	SRAM parity
■■■	I/O SRAM parity

■: On □: Off

NOTE
The alarm LED indicates that a reset is under way immediately after the power is turned on.

2.4.4 Sub–CPU Board

- **Specification**

Name7	Specification
Sub–CPU board	A20B–8002–0190

NOTE
The sub–CPU board cannot fit into any of the following slots.
- Center slot of a unit with 3 option slots
- Option slot farthest from the LCD in a unit with 4 option slots

- **Connector mounting location**

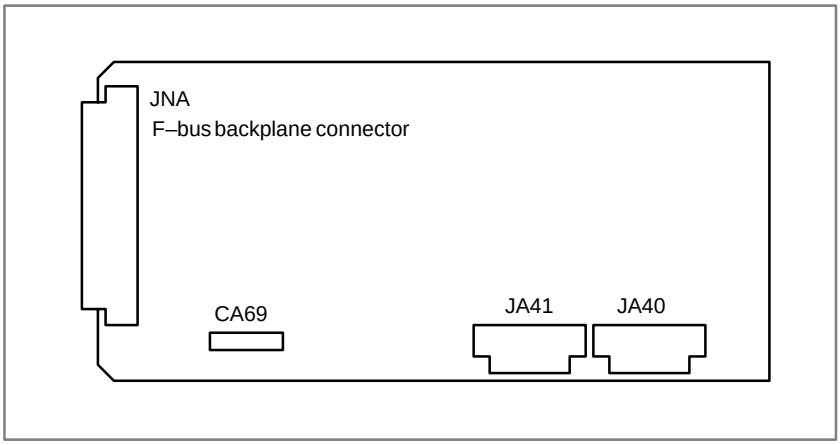

Connector number	Application
CA69	Servo check
JA41	Serial spindle/position coder
JA40	Analog output

● Card and DIMM module locations

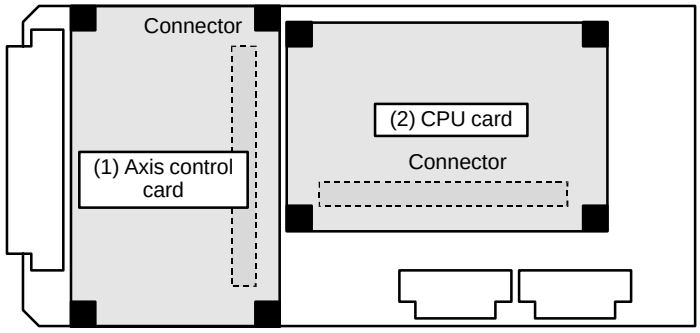

The DRAM module is mounted on the CPU card.

No.	Name	Specification	Function	Remarks
(1)	Axis control card	A20B–3300–0243	Axis control 2 axes	Applicable servo software: Series 90B0
		A20B–3300–0242	Axis control 4 axes	
		A20B–3300–0241	Axis control 6 axes	
		A20B–3300–0240	Axis control 8 axes	
		A20B–3300–0248	Axis control 4 axes	Applicable servo software: Series 90B0 (High–speed HRV)
		A20B–3300–0245	Axis control 6 axes	
		A20B–3300–0244	Axis control 8 axes	
		A20B–3300–0246	Learning–control axis control	Applicable servo software: Series 90B3/90B7
		A20B–3300–0247	Learning–control axis control	Applicable servo software: Series 90B3/90B7 (High–speed HRV)
(2)	CPU card	A20B–3300–0310		DRAM 16MB
		A20B–3300–0311		DRAM 32MB

- **Block diagram**

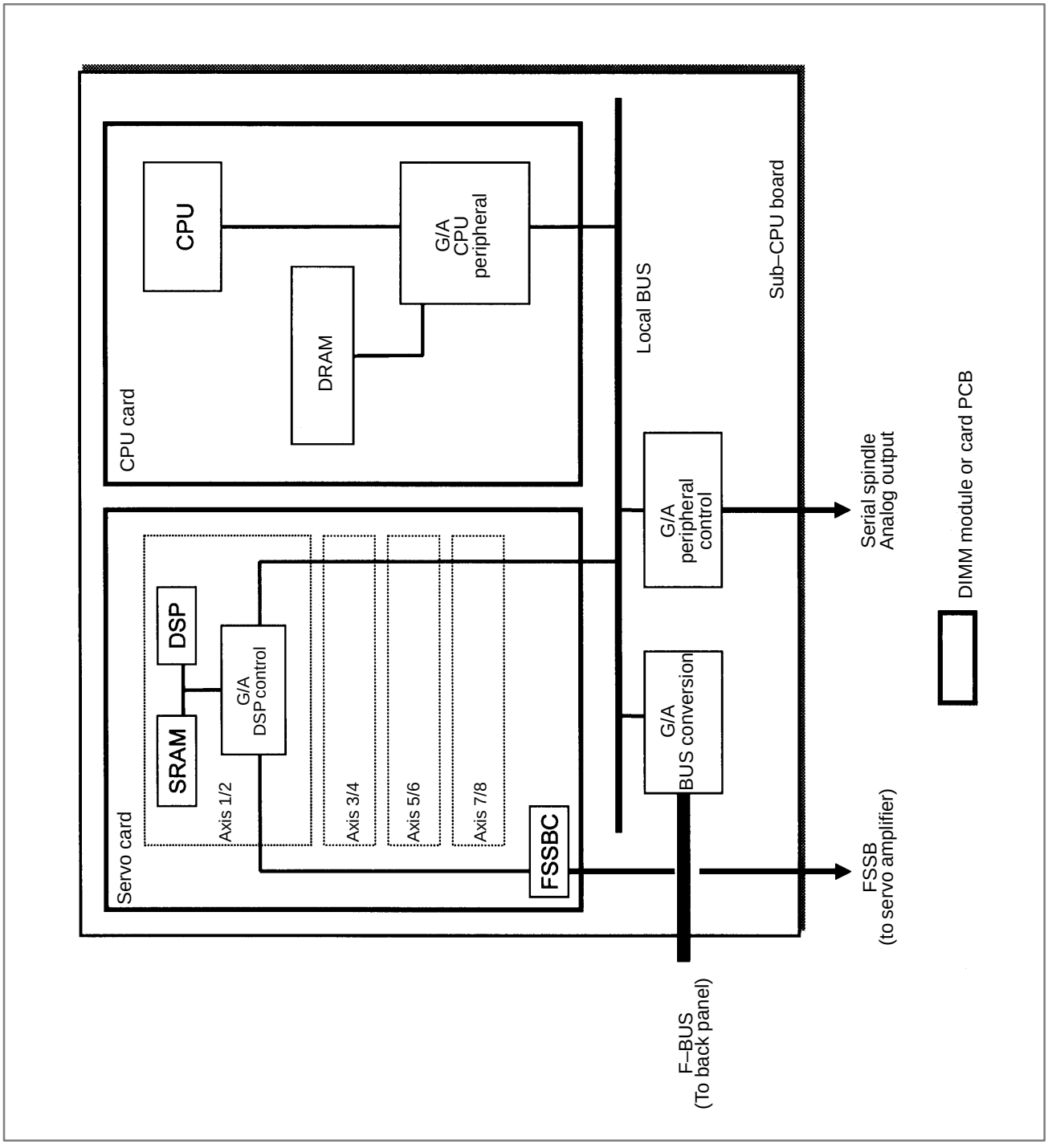

- **LED indication**

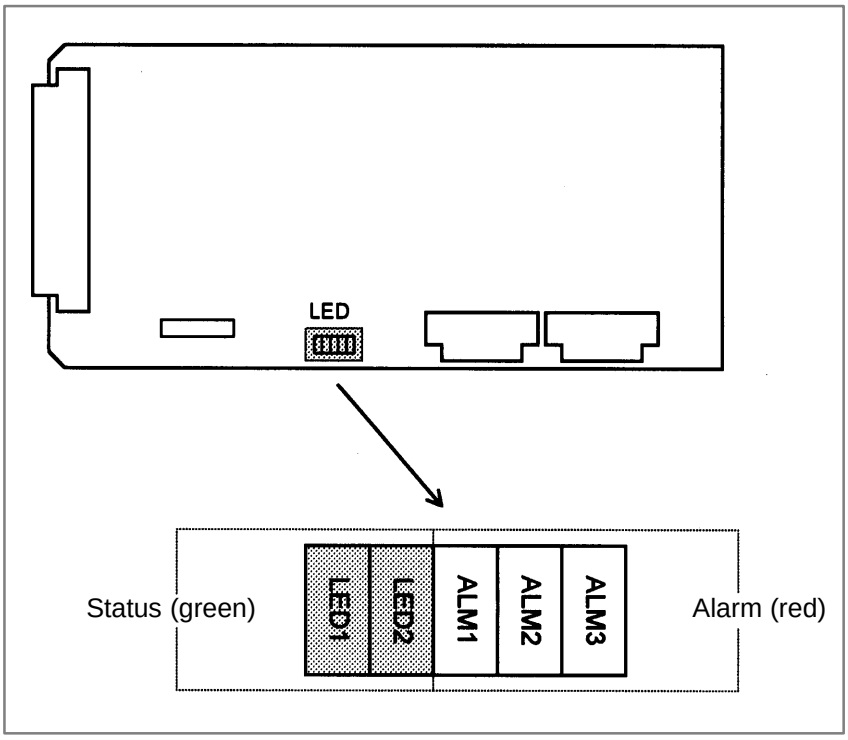

(1) Changes in status LED (green) indication at power–on time

No.	Status LED (LED1, 2)	Status
1	□□	Power is not supplied.
2	■■	Initial status immediately after power is switched on; the sub–CPU has not started.
3	□■	RAM initialization.
4	■□	Waiting for system ID to be set up.
5	□□	Waiting for software initialization to be completed No. 1
6	■■	Waiting for software initialization to be completed No. 2
7	□■	Initialization of position coder, digital servo circuit, etc.
8	■□	Initialization completed, and usual operation under way

■: On □: Off

(2) Alarm LED (red) indication at system alarm occurrence

Alarm LED	Meaning
ALM1	Bus error on sub–CPU board.
ALM2	Servo alarm.
ALM3	Bus error on other than sub–CPU board (F–BUS).

2.4.5
RISC Board

- **Specification**

Name	Specification
RISC board	A20B–8100–0170

NOTE
The RISC board cannot fit into any of the following slots.
· Center slot of a unit with 3 option slots
· Option slot farthest from the LCD in a unit with 4 option slots

- **Connector mounting location**

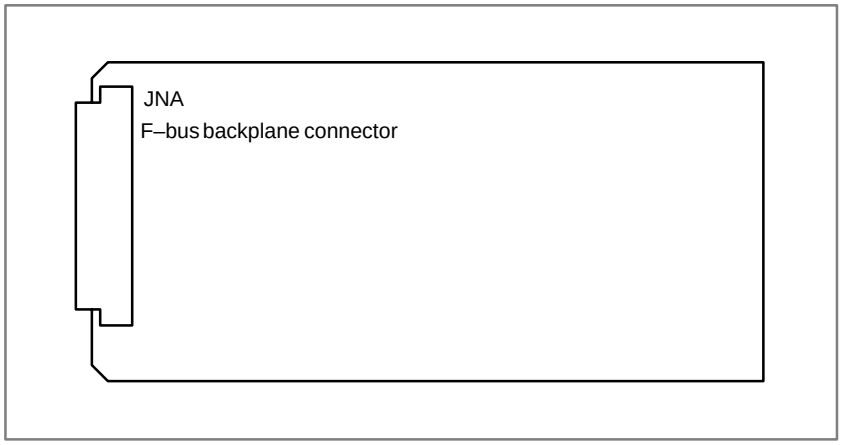

- **Card mounting location**

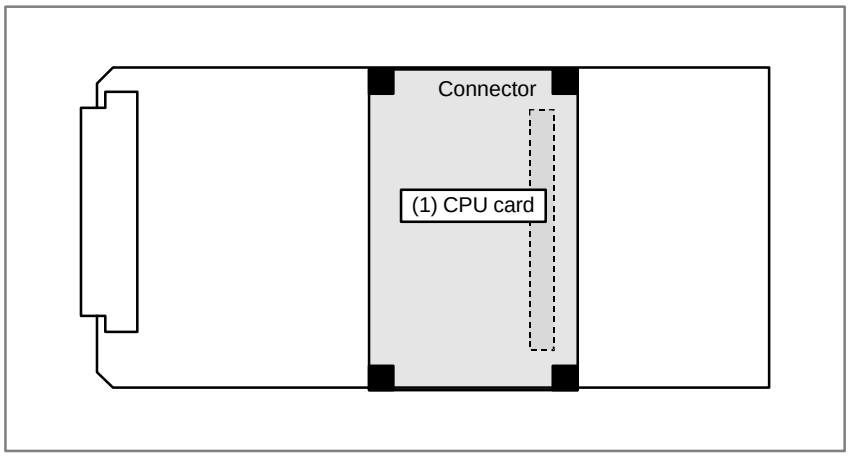

No.	Name	Specification	Function	Remarks
(1)	CPU card	A20B–3300–0102		Standard type
		A17B–3300–0400		High–speed type

● LED indication

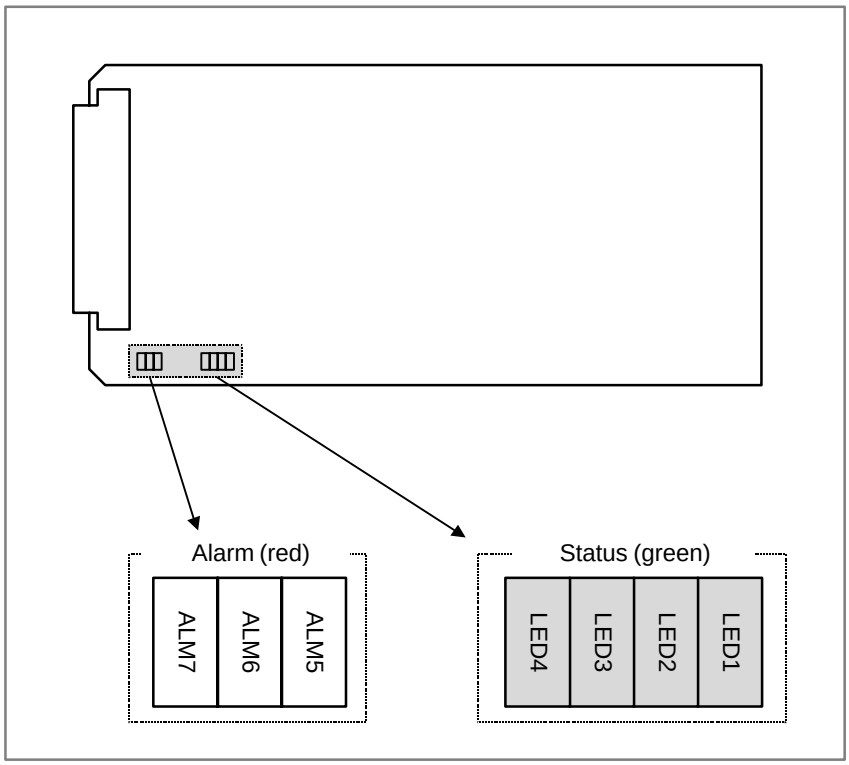

(1) Status LED (green) indication (LED lighting)

Alarm LED (LED4 to LED1)	Status
□□□□	Power is not supplied.
■□□□	CNC wait (1) (Check the CNC for the cause.)
□■□□	Module ID error (Replace the printed circuit board or FROM module.)
■■□□	CNC wait (5) (Check the CNC for the cause.)
□□■□	ROM test error (Replace the printed circuit board or FROM module.)
■□■□	CNC wait (3) (Check the CNC for the cause.)
■■■□	System error (Replace the printed circuit board or FROM module.)
□□□■	RAM test error (Replace the printed circuit board.)
■□□■	CNC wait (2) (Check the CNC for the cause.)
□■□■	Parameter error (Replace the printed circuit board or FROM module.) (B437 Series only)
□□■■	DRAM test error, interpolation cycle interrupt wait (Replace the printed circuit board.)
■□■■	CNC wait (4) (Check the CNC for the cause.) (B451 Series only)
■■■■	Power was turned on, but the processor is not activated.

■: On □: Off

(2) Status LED (green) indication (LED blinking)

Alarm LED (LED4 to LED1)	Status
★□□□	Command execution in progress (reset)
□★★□	Command execution in progress (pre–processing, distribution)
□□□★	Command wait
□★□★	NC statement input wait
★★□★	Command execution in progress (parameter change) (B437 Series only)
□□★★	Automatic operation is not activated. (Replace the printed circuit board.) (B451 Series only)

★: Blinking □: Off

(3) Alarm LED (red) indication

Alarm LED (LED7 to LED6)	Status
■□□	DRAM parity error occurred.
□■□	Something unusual occurred in the power for the processor core.
□□■	Reserved

■: On □: Off

2.4.6
Data Server Board

- **Specification**

Name		Specification
Data server board (ATA card version)		A20B–8100–0271
	Add–on board	A20B–2002–0960

NOTE
The data server board (ATA card version) cannot fit into any of the following slots.
· Option slot nearest to the LCD
· Center slot of a unit with 3 option slots
· Option slot farthest from the LCD in a unit with 4 option slots

- **Connector mounting location**

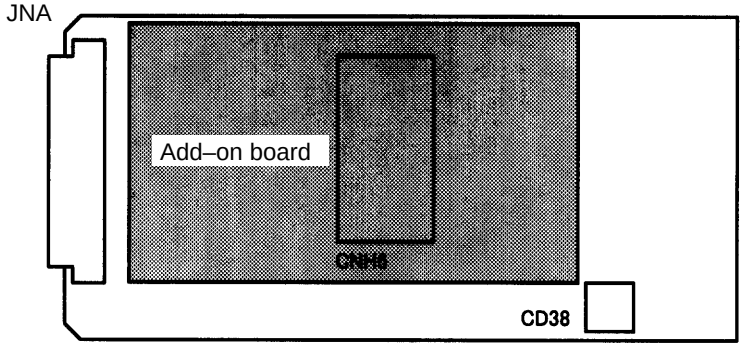

CNH6 is mounted on the add–on board.

Connector number	Application
CNH6	ATA card interface
CD38	10BASE–T Ethernet interface

- **LED indication**

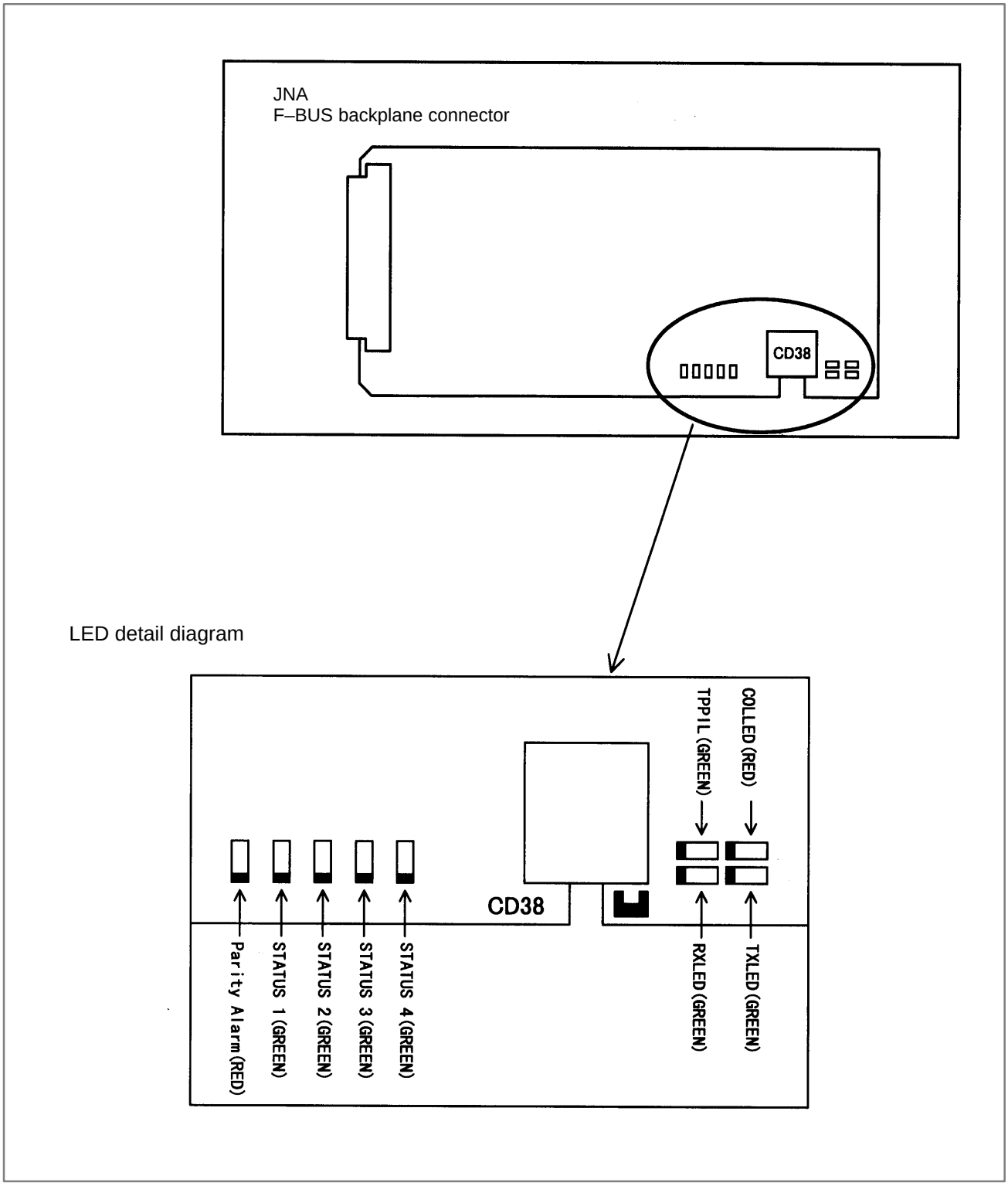

LED indication transition at power–on time

No.	LED indication 1234	Ethernet board status
1	STATUS □□□□	Power off.
2	STATUS ■■■■	Initial status immediately after power is switched on.
3	STATUS □■■■	MPU initialization completed.
4	STATUS □□■■	Firmware download completed.
5	STATUS □□□■	Control passed to the OS.
6	STATUS ■■■□	OS PHASE 1
7	STATUS □■■□	OS PHASE 2
8	STATUS ■□■□	OS PHASE 3
9	STATUS □□■□	OS PHASE 4
10	STATUS ☆□□□	Start sequence completed.

When the Ethernet board is started normally, the STATUS LEDs light as shown at No. 10. This condition is preserved unless an abnormal condition occurs.

Communication status LED indication

No.	LED indication	Ethernet communication status
1	RXLED ■	Lights during data reception.
2	TXLED ■	Lights during data transmission.
3	TPPIL ■	Lights to indicate normal connection with the hub.
4	COLLED ■	Lights to indicate a data collision.

NOTE

TPPIL: If this LED is off, communication does not occur. It is likely that the Ethernet board is not connected with the hub normally. The LED does not light also when the power to the hub is off. It remains to be on when the Ethernet board is connected to the hub normally.

COLLED: This LED lights frequently if Ethernet communication traffic (amount of communication) is heavy or noise in the surrounding is high.

LED indication (STATUS) at error occurrence
The STATUS LEDs repeat LONG and SHORT patterns. The LONG and SHORT patterns correspond to long and short lighting intervals, respectively.

No.	STATUS LED indication		Ethernet/data server board state	
	LONG 1234	SHORT 1234		
1	□□□■	■□□□	Failure caused by this board.	System reset
2	□□□■	□■□□		Machine check
3	□□■■	■□□□		DRAM parity alarm
4	□□■■	□■□□	Failure caused by another board.	NMI of another module

NOTE
If an error, indicated by repeatedly flashing a LONG and SHORT combination other than the above, occurs, contact FANUC.

LED indication (ALARM) at error occurrence

No.	LED indication	Ethernet board status
1	Parity Alarm ■	A parity error has occurred in main memory. It is likely that the hardware is defective.

2.4.7
Loader Control Board

- **Specification**

Name	Specification
Loader control board	A20B–8100–0830

NOTE
The loader control board cannot fit into any of the following slots.
· Center slot of a unit with 3 option slots
· Option slot farthest from the LCD in a unit with 4 option slots

- **Connector mounting location**

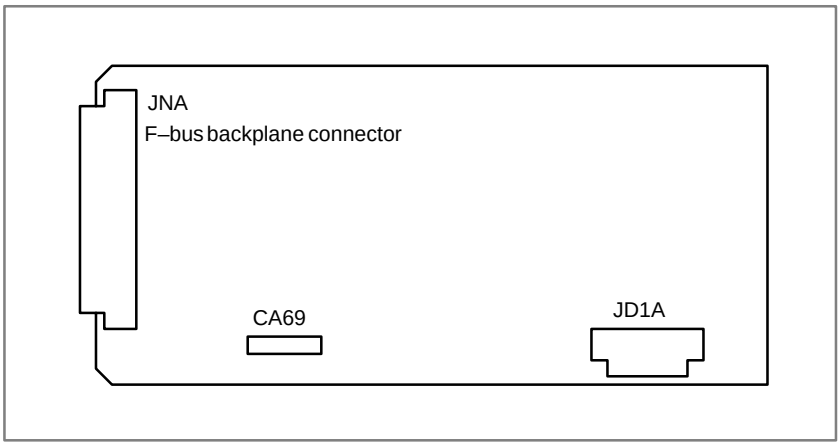

Connector number	Application
CA69	Servo check
JD1A	I/O link

- **Card mounting location**

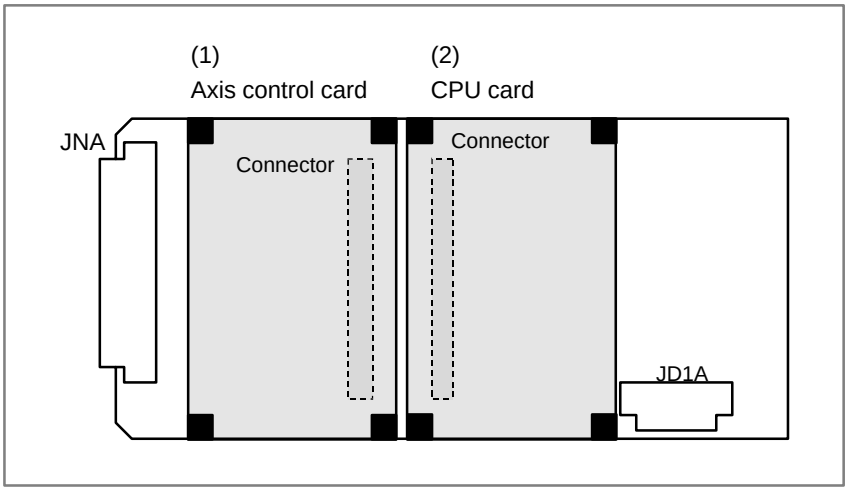

No.	Name	Specification	Function	Remarks
(1)	Axis control card	A20B–3300–0033	Axis control 2 axes	Applicable servo software: Series 9090
		A20B–3300–0032	Axis control 4 axes	
(2)	CPU card	A20B–3300–0291		With DRAM 16MB

- **Block diagram**

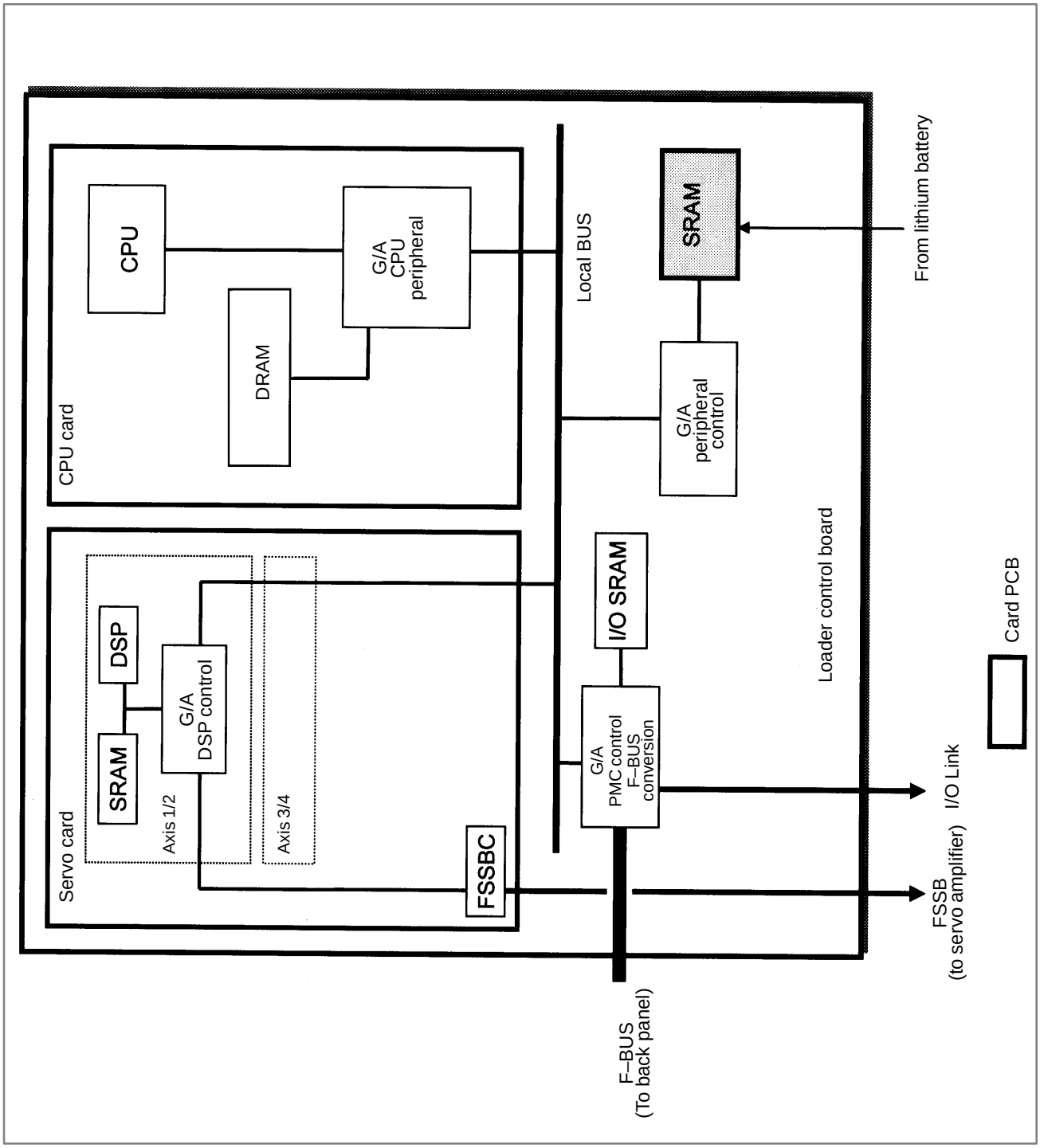

- **LED indication**

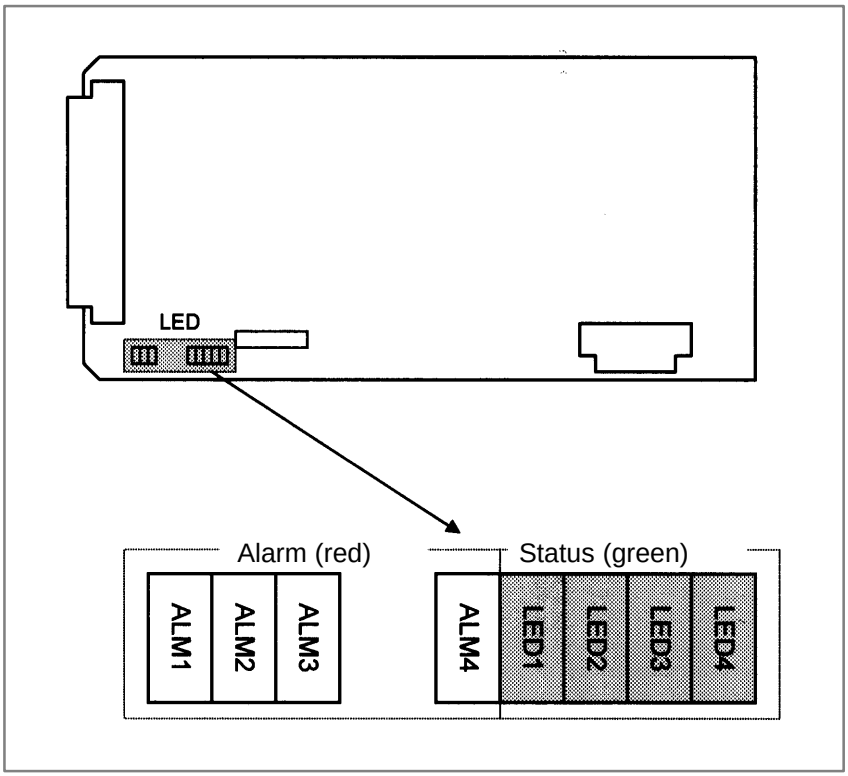

(1) Changes in status LED (green) indication at power–on time

No.	Status LED (LED1 to 4)	Status
1	□□□□	Power is not supplied.
2	■■■■	Initial status immediately after power is switched on; the loader CPU has not started.
3	■■■□	RAM initialization
4	■■□■	Waiting for system ID to be set up.
5	■■□□	Waiting for software initialization to be completed No. 1
6	■□■■	Waiting for software initialization to be completed No. 2
7	□■■□	Waiting for digital servo to be initialized.
9	□□□■	Initialization completed, and usual operation under way.

■: On □: Off

(2) Alarm LED (red) indication at system alarm occurrence
When any of these alarm LEDs lights, it is likely that the hardware is defective.

Alarm LED	Meaning
ALM1	SRAM parity alarm.
ALM2	Servo alarm.
ALM3	Lights when a system alarm occurs. Used by the software to stop the system.
ALM4	Lights when a system alarm occurs. The hardware has detected a failure in the system.

2.4.8 HSSB Interface Board

- **Specification**

Name	Specification
HSSB interface board	A20B–8001–0641

- **Connector mounting location**

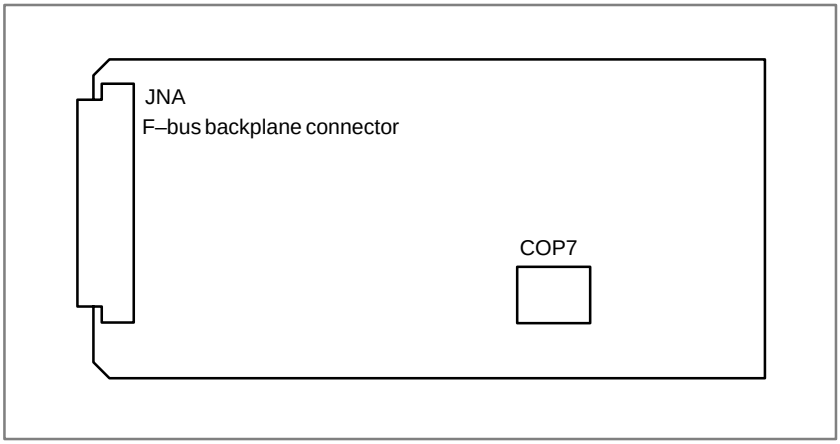

Connector number	Application
COP7	High–speed serial bus interface

- **Card mounting location**

No card is mounted on the HSSB interface board.

- **LED indication**

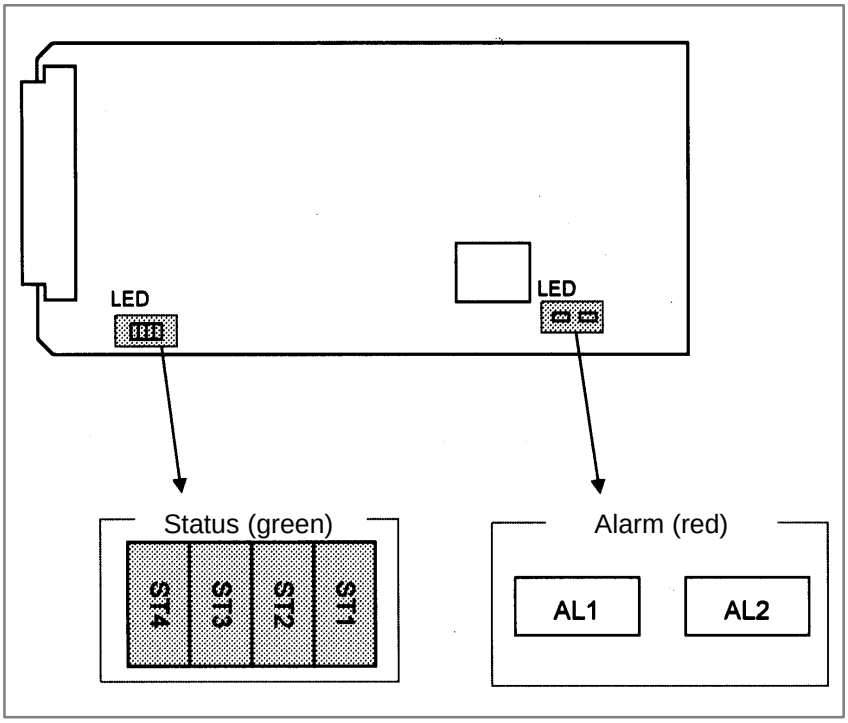

(1) Changes in status LED (green) indication at power–on time

No.	Status LED (ST4 to 1)	Status
1	□□□□	Power is not supplied.
2	■■■■	Initial status immediately after power is switched on.
3	■■■□	HSSB board being initialized.
4	■■□■	Waiting for PC boot to be executed.
5	■■□□	CNC screen being displayed on the PC.
6	■□□□	Initialization completed, and usual operation under way.

■: On □: Off

(2) Status LED (PC status, green) indication at error occurrence

Status LED (ST4 to 1)	Status
□■■□	A thermal error has occurred at the PANEL *i*.
□■□■	HSSB communication was discontinued.
□■□□	Parity alarm in NC/PC common RAM.
□□■■	An HSSB communication error has occurred.
□□■□	A battery alarm has occurred at the PANEL *i*.

■: On □: Off

(3) Alarm LED (red) indication at error occurrence

Alarm LED	Meaning
AL1	HSSB communication was discontinued.
AL2	Parity alarm in NC/PC common RAM.

- **Rotary switch (SW1) setting**

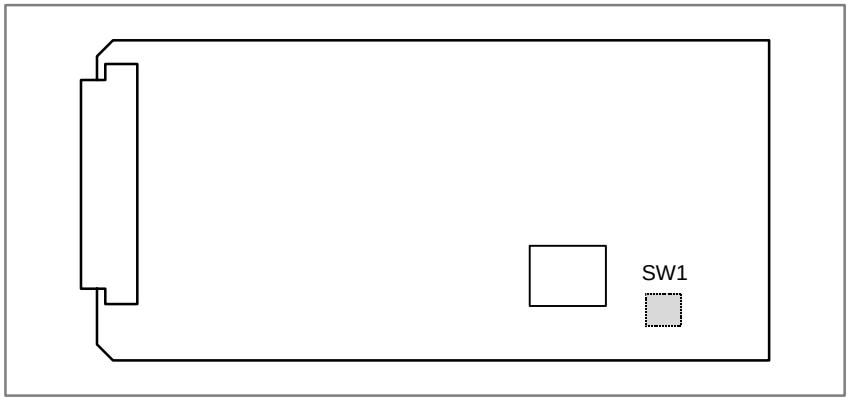

Rotary switch setting when the PC or PANEL *i* is connected
By changing the rotary switch setting on the board, the startup sequence at power–up can be changed.

Rotary switch setting	Contents
0	Setting for maintenance. The start menu is displayed. It is possible to start boot and IPL from the PC or PANEL *i*.
1	Setting for usual operation. The start menu is not displayed. It is impossible to start boot or IPL from the PC.
2	The CNC and PC or PANEL *i* do not perform the handshake but start independently of each other. • CNC Even if the PC is not connected or turned on, just the CNC can be started and operated. (For this operation, a special display unit, MDI, operator's panel, and the like are necessary.) Even if the PC or PANEL *i* is connected and turned on, the startup menu does not appear. • PC or PANEL *i* Even if the CNC is connected or turned on, the startup menu does not appear. The boot or IPL operation cannot be performed from the PC or PANEL *i*. If an HSSB device driver for Windows 95/98, WindowsNT4.0, or Windows2000 is installed on the PC or PANEL *i*, just the PC or PANEL *i* or CNC can be turned on or off. For multi–connection, in which multiple CNC units are connected to a single PC or PANEL *i*, usually select this setting.

NOTE
PANEL *i* used here represents hardware that can operate on a stand–alone basis (provide a stand–alone option).

2.4.9 I/O Link–II Board

Name	Specification
FANUC I/O Link–II board	A20B–8100–0250

- **Connector location**

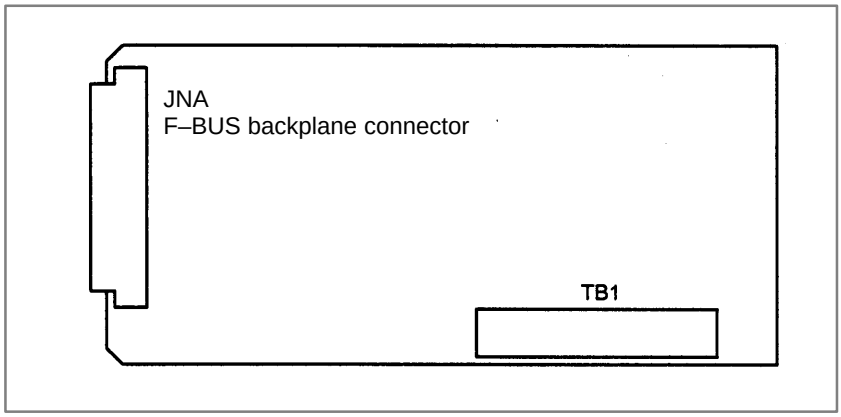

Connector number	Application
TB1	Terminal board for FANUC I/O Link–II interface

- **Card location**

No card is mounted on the FANUC I/O Link–II board.

- **LED indication**

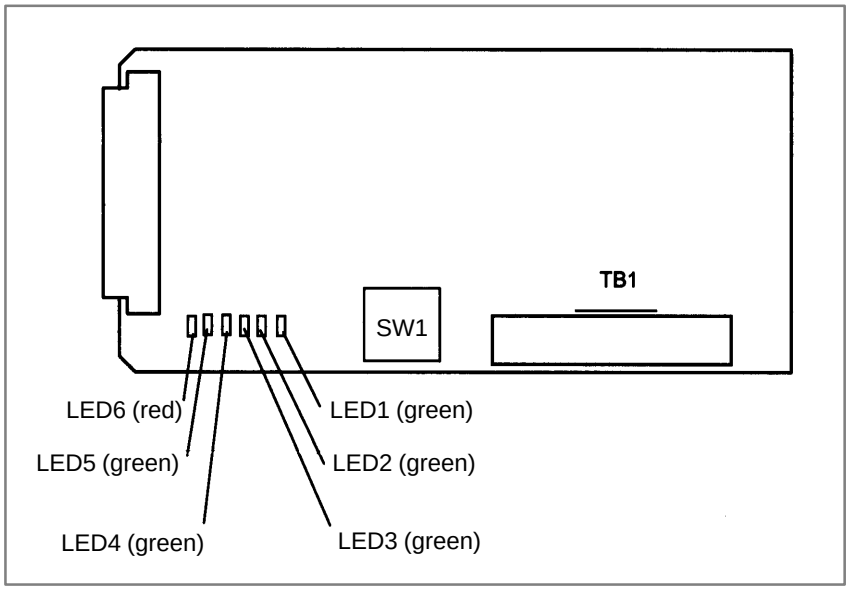

(1) Hardware control LEDs

LED No.	Meaning
LED5	Lights when the CPU on the FANUC I/O Link–II board is running. When the LED is off, it means that the CPU has been reset.
LED6	Lights when a DRAM parity error is detected. It is likely that the hardware is defective.

(2) Soft control LEDs

Status LED (ST4 to 1)	Meaning
■■■■	Immediately after power is switched on.
■■□□	Communication board being initialized.
☆□□□	DI/DO data is being transferred normally.
□□□■	A RAM parity error has occurred. It is likely that the hardware is defective.
□□■■	An F–BUS error has occurred.
□□■□	An F–BUS system emergency condition has occurred. Alternatively, a communication error (FCS error, command error, frame length error, response time–out, etc.) has occurred.
☆□■□ ↓ ☆□□□	A communication error has occurred, resulting in error log being stored. Communication with a slave station has restarted. LED2 goes off when a log command (monitor function) is used. It goes off also when the communication error log is erased using a clear command.

■: On □: Off ☆: Blinking

2.4.10 PROFIBUS Board

Name		Specification
PROFIBUS board (master function)		A20B–8100–0430
	Add–on board (slave function)	A20B–2100–0430

NOTE
The PROFIBUS board cannot fit into any of the following slots.
- Center slot of a unit with 3 option slots
- Option slot farthest from the LCD in a unit with 4 option slots

● Connector location

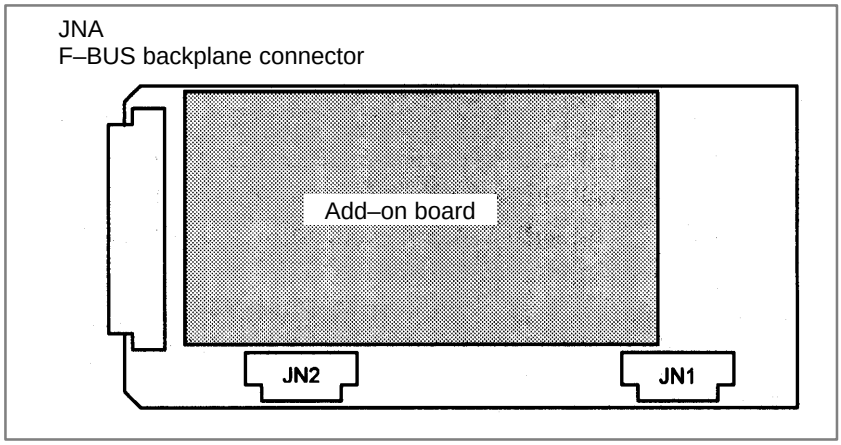

Connector number	Application
JN1	Adapter unit interface for master station
JN2	Adapter unit interface for slave station

● Card location

No card is mounted on the PROFIBUS board.

● LED indication

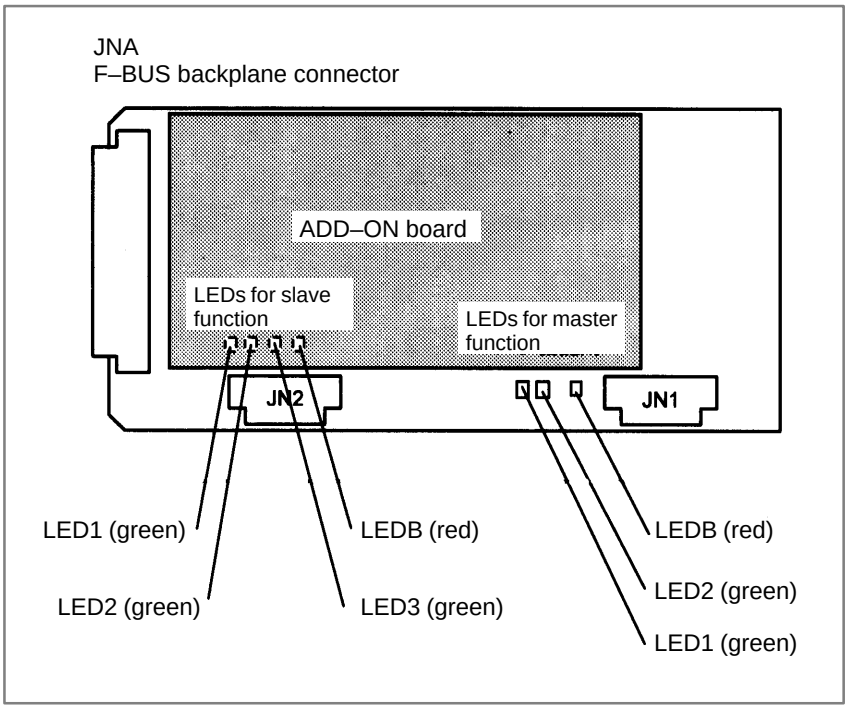

(1) LEDs for master function

LED No. (abbreviation)	Meaning
LED1 (CPU)	Lights to indicate the CPU for the master function is running.
LED2 (TOKEN)	Lights when the communication LSI (ASPC2) has a token (right to transmit).
LEDB (PALM)	Lights when a memory parity alarm occurs in the master function circuit. It is likely that the hardware is defective.

(2) LEDs for slave function (mounted on the add–on board)

LED No. (abbreviation)	Meaning
LED1 (CPU)	Lights to indicate the CPU for the slave function is running.
LED2 (COMM)	Lights when PROFIBUS communication starts. It remains to be on after the PROFIBUS communication is suspended, however.
LED3 (RUN)	Lights to indicate that PROFIBUS communication is being performed normally.
LEDB (PALM)	Lights when a memory parity alarm occurs in the slave function circuit. It is likely that the hardware is defective.

2.4.11 Ethernet Board

Name	Specification
Ethernet board	A20B–8100–0271

NOTE
The Ethernet board cannot fit into the option slot nearest to the LCD.

- **Connector location**

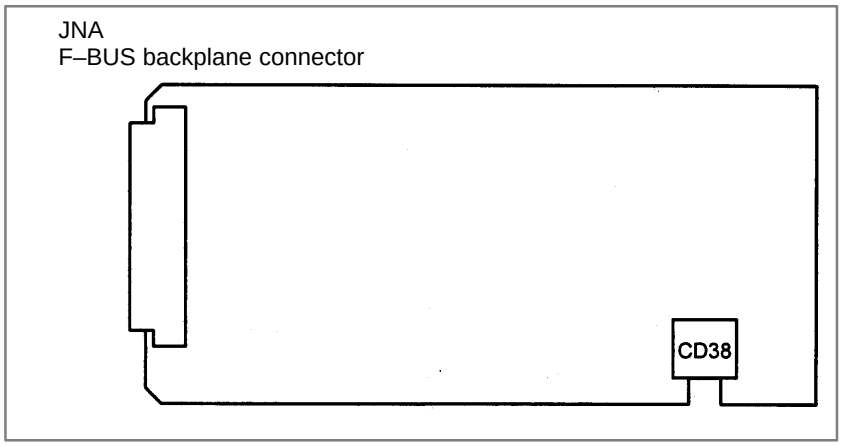

Connector number	Application
CD38	10BASE–T Ethernet interface

- **Card location**

No card is mounted on the Ethernet board.

- **LED indication**

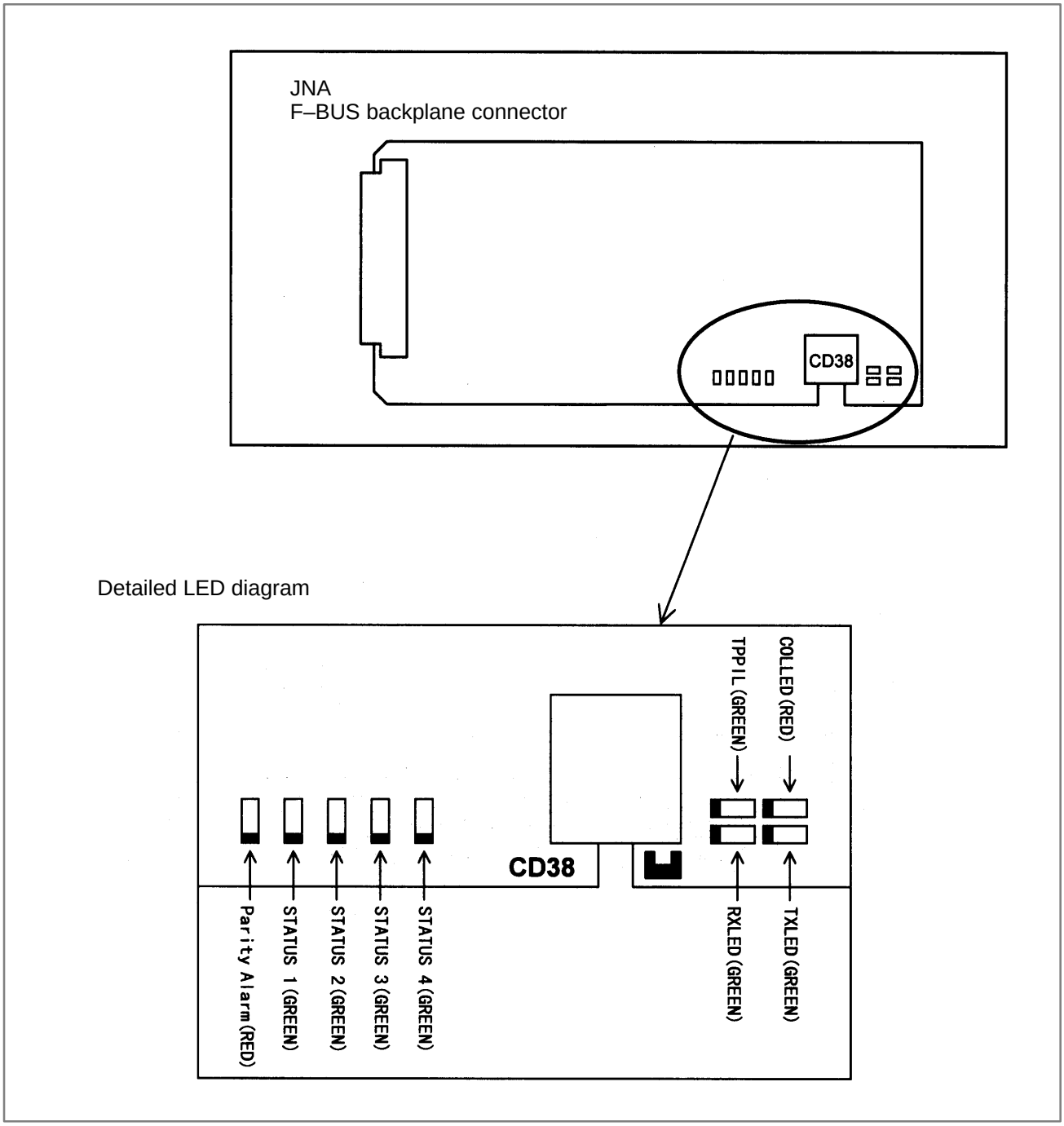

LED indication transition at power–on time

No.	LED indication 1234	Ethernet board status
1	STATUS □□□□	Power off
2	STATUS ■■■■	Initial status immediately after power is switched on.
3	STATUS □■■■	MPU initialization completed.
4	STATUS □□■■	Firmware download completed.
5	STATUS □□□■	Control passed to the OS.
6	STATUS ■■■□	OS PHASE 1
7	STATUS □■■□	OS PHASE 2
8	STATUS ■□■□	OS PHASE 3
9	STATUS □□■□	OS PHASE 4
10	STATUS ☆□□□	Start sequence completed.

When the Ethernet board is started normally, the STATUS LEDs light as shown at No. 10. This condition is preserved unless an abnormal condition occurs.

Communication status LED indication

No.	LED indication	Ethernet communication status
1	RXLED ■	Lights during data reception.
2	TXLED ■	Lights during data transmission.
3	TPPIL ■	Lights to indicate a normal connection with the hub.
4	COLLED ■	Lights to indicate a data collision.

NOTE

TPPIL: If this LED is off, communication does not occur. It is likely that the Ethernet board is not connected with the hub normally. The LED does not light also when the power to the hub is off. It remains to be on when the Ethernet board is connected to the hub normally.

COLLED: This LED lights frequently if Ethernet communication traffic (amount of communication) is heavy. It also lights frequently if noise in the surrounding is high.

LED indication (STATUS) at error occurrence
The STATUS LEDs repeat LONG and SHORT patterns. The LONG and SHORT patterns correspond to long and short lighting intervals, respectively.

No.	STATUS LED indication		Ethernet/data server board state	
	LONG 1234	SHORT 1234		
1	□□□■	■□□□	Failure caused by this board.	System reset
2	□□□■	□■□□		Machine check
3	□□■■	■□□□		DRAM parity alarm
4	□□■■	□■□□	Failure caused by another board.	NMI of another module

NOTE
If an error, indicated by repeatedly flashing a LONG and SHORT combination other than the above, occurs, contact FANUC.

LED indication (ALARM) at error occurrence

No.	LED indication	Ethernet board status
1	Parity Alarm ■	A parity error has occurred in main memory. It is likely that the hardware is defective.

2.4.12 DeviceNet Interface Board

Name	Specification
DeviceNet interface board	A20B–8001–0880

NOTE
The DeviceNet board cannot fit into the center option slot of a unit with 3 option slots

- **Connector mounting location**

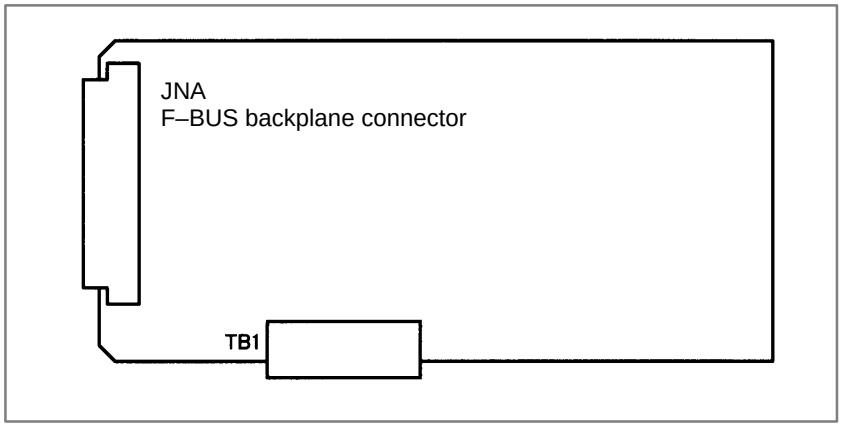

Connector number	Application
TB1	DeviceNet interface

The terminal plate can be removed from the DeviceNet board interface connector with the cable still connected. Remove the terminal plate by pulling it towards you.

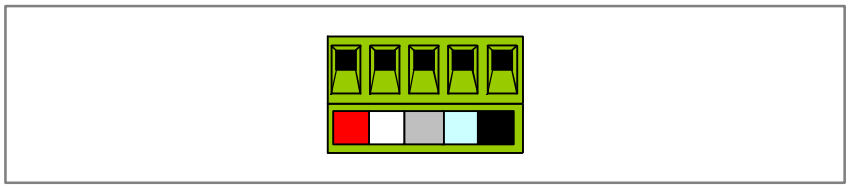

NOTE
The DeviceNet board cannot be removed unless the connector's terminal plate has been removed first.

- **LED display**

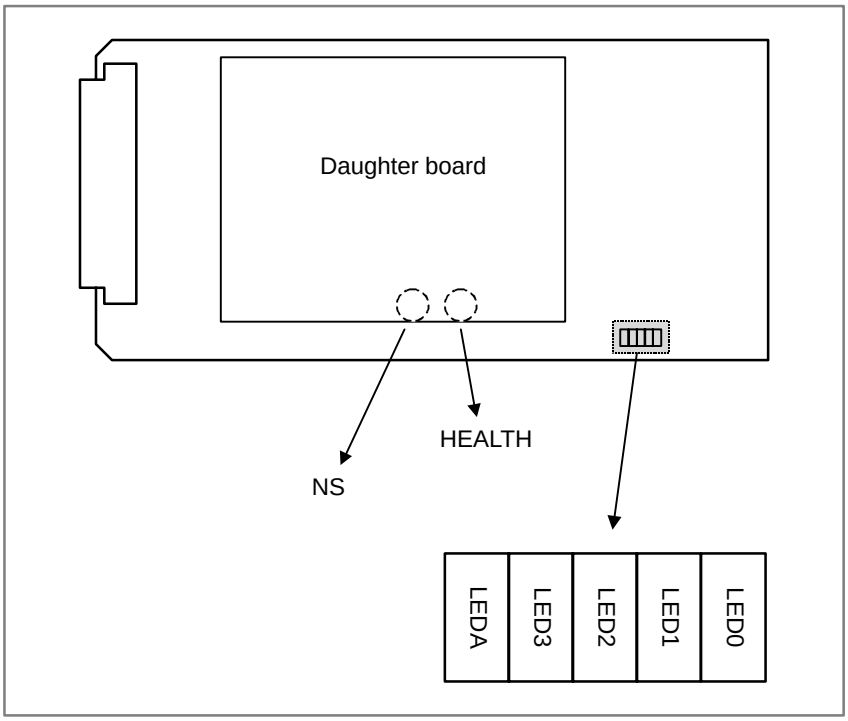

NS and HEALTH are mounted on the back of the daughter board.
LED indication

Name	Color	Description
LED0 to 3	Green	No special meaning
LEDA	Red	This LED glows when something unusual occurs in the internal daughter board. At power–up, the LED does not glow. If this LED glows, replace the DeviceNet board.
NS	Red/ green	DeviceNet module/network status LED. The LED indicates whether the DeviceNet board is turned on or whether DeviceNet communication is normally performed. For the meaning of this LED indication, refer to the specifications supplied by ODVA.
HEALTH	Red/ green	This LED indicates the status of the daughter board. At power–up, this LED glows in red. When the firmware is loaded to the internal daughter board, the LED turns green. Then, if something unusual occurs in the daughter board, the LED turns red. If the LED does not turn green, replace the DeviceNet board.

2.5 LIST OF UNITS AND PRINTED CIRCUIT BOARDS

2.5.1 Basic Unit

Model	Name	Drawing number	Remarks
16*i*	Basic Unit (No slot)	A02B–0281–B500	
	Basic Unit (2 slots)	A02B–0281–B502	
	Basic Unit (3 slots)	A02B–0281–B503	
	Basic Unit (4 slots)	A02B–0281–B504	
18*i*	Basic Unit (No slot)	A02B–0283–B500	
		A02B–0297–B500	For 18*i*–MB5
	Basic Unit (2 slots)	A02B–0283–B502	
		A02B–0297–B502	For 18*i*–MB5
	Basic Unit (3 slots)	A02B–0283–B503	
		A02B–0297–B503	For 18*i*–MB5
	Basic Unit (4 slots)	A02B–0283–B504	
		A02B–0297–B504	For 18*i*–MB5
21*i*	Basic Unit (No slot)	A02B–0285–B500	
	Basic Unit (2 slots)	A02B–0285–B502	

Model	Name	Drawing number	Remarks
All models	Case (No slot)	A02B–0236–D100#0C	
	Case (2 slots)	A02B–0236–D100#2C	
	Case (3 slots)	A02B–0236–D100#3C	
	Case (4 slots)	A02B–0236–D100#4C	

2.5.2 Display Unit

Model	Name	Drawing number	Remarks
All models	10.4″ color LCD	A02B–0281–D500	
	10.4″ color LCD	A02B–0281–D501	With a touch panel
	9.5″ monochrome LCD	A02B–0281–D502	
	8.4″ color LCD	A02B–0281–D503	
	7.2″ monochrome LCD	A02B–0281–D504	

2.5.3
MDI Unit

Model	Name	Drawing number	Remarks
All models	T series/English/Small keyboard Horizontal type, 200×140mm	A02B–0281–C120#TBR	
	T series/English/Standard keyboard Vertical/horizontal type, 200×260mm	A02B–0281–C121#TBR	
	T series/English/Standard keyboard Horizontal type, 220×230mm	A02B–0281–C125#TBR	
	T series/English/Standard keyboard Vertical type, 220×290mm	A02B–0281–C126#TBR	
	M series/English/Small keyboard Horizontal type, 200×140mm	A02B–0281–C120#MBR	
	M series/English/Standard keyboard Vertical/horizontal type, 200×260mm	A02B–0281–C121#MBR	
	M series/English/Standard keyboard Horizontal type, 220×230mm	A02B–0281–C125#MBR	
	M series/English/Standard keyboard Vertical type, 220×290mm	A02B–0281–C126#MBR	
	61 full/English keyboard Horizontal type, 220×230mm	A02B–0261–C162#MCR	
	61 full/English keyboard Vertical type, 220×290mm	A02B–0261–C161#MCR	
	CAP*i* T/English keyboard Horizontal type, 220×230mm	A02B–0281–C125#TFBR	
	CAP*i* T/English keyboard Vertical type, 220×290mm	A02B–0281–C126#TFBR	
	T series/Symbol/Small keyboard Vertical type, 200×140mm	A02B–0281–C120#TBS	
	T series/Symbol/Standard keyboard Vertical/horizontal type, 200×260mm	A02B–0281–C121#TBS	
	T series/Symbol/Standard keyboard Horizontal type, 220×230mm	A02B–0281–C125#TBS	
	T series/Symbol/Standard keyboard Vertical type, 220×290mm	A02B–0281–C126#TBS	
	M series/Symbol/Small keyboard Horizontal type, 200×140mm	A02B–0281–C120#MBS	
	M series/Symbol/Standard keyboard Vertical/horizontal type, 200×260mm	A02B–0281–C121#MBS	
	M series/Symbol/Standard keyboard Horizontal type, 220×230mm	A02B–0281–C125#MBS	
	M series/Symbol/Standard keyboard Vertical type, 220×290mm	A02B–0281–C126#MBS	
	61 full/Symbol keyboard Horizontal type, 220×230mm	A02B–0261–C162#MCS	
	61 full/Symbol keyboard Vertical type, 220×290mm	A02B–0261–C161#MCS	
	CAP*i* T/Symbol keyboard Horizontal type, 220×230mm	A02B–0281–C125#TFBS	
	CAP*i* T/Symbol keyboard Vertical type, 220×290mm	A02B–0281–C126#TFBS	

2.5.4
Printed Circuit Boards

Name	Drawing number	ID	Remarks
Motherboard for 16*i*	A20B–8100–0660	3x08	
Motherboard for 18*i*	A20B–8100–0661	3x09	
Motherboard for 21*i* (without Ethernet function, PMC–SA1)	A20B–8100–0662	0x0A	
Motherboard for 21*i* (without Ethernet function, PMC–SB7)	A20B–8100–0663	1x0A	
Motherboard for 21*i* (with Ethernet function, PMC–SA1)	A20B–8100–0664	2x0A	
Motherboard for 21*i* (with Ethernet function, PMC–SB7)	A20B–8100–0665	3x0A	
CPU card (16*i*/18*i*, DRAM 16MB)	A20B–3300–0310	CPU: 11 DRAM: A9	
CPU card (16*i*/18*i*, DRAM 32MB)	A20B–3300–0311	CPU: 11 DRAM: AA	
CPU card (21*i*, DRAM 16MB)	A20B–3300–0312	CPU: 11 DRAM: A9	When the embedded Ethernet function is used with 21*i*.
CPU card (21*i*, DRAM 32MB)	A20B–3300–0313	CPU: 11 DRAM: AA	When the embedded Ethernet function is used with 21*i*.
CPU card (21*i*, DRAM32MB)	A20B–3300–0290	CPU: 09 DRAM: 8A	
CPU card (21*i*, DRAM16MB)	A20B–3300–0291	CPU: 09 DRAM: 89	Used also for the loader control board
CPU card (standard type for RISC board)	A20B–3300–0102	0A	
CPU card (high–speed type for RISC board)	A17B–3300–0400	0A	
Display control card (10.4″ color LCD, graphic function, embedded Ethernet function)	A20B–3300–0280	0C	
Display control card (8.4″ color LCD, graphic function, embedded Ethernet function)	A20B–3300–0281	08	
Display control card (9.5″ monochrome LCD, graphic function, embedded Ethernet function)	A20B–3300–0282	04	

Name	Drawing number	ID	Remarks
Display control card (7.2″ monochrome LCD, graphic function, embedded Ethernet function)	A20B–3300–0283	00	
Display control card (9.5″ monochrome LCD, embedded Ethernet function)	A20B–3300–0300	07	
Display control card (7.2″ monochrome LCD, embedded Ethernet function)	A20B–3300–0301	03	
Display control card (9.5″ monochrome LCD)	A20B–3300–0302	07	
Display control card (7.2″ monochrome LCD)	A20B–3300–0303	03	
Axis control card (2 axes)	A20B–3300–0033	00	Applicable servo software: Series 9090 21*i*, Loader control
Axis control card (4 axes)	A20B–3300–0032	01	Applicable servo software: Series 9090 21*i*, Loader control
Axis control card (2 axes)	A20B–3300–0243	08	Applicable servo software: Series 90B0
Axis control card (4 axes)	A20B–3300–0242	08	Applicable servo software: Series 90B0
Axis control card (6 axes)	A20B–3300–0241	08	Applicable servo software: Series 90B0
Axis control card (8 axes)	A20B–3300–0240	08	Applicable servo software: Series 90B0
Axis control card (4 axes, high–speed HRV)	A20B–3300–0248	08	Applicable servo software: Series 90B0
Axis control card (6 axes, high–speed HRV)	A20B–3300–0245	08	Applicable servo software: Series 90B0
Axis control card (8 axes, high–speed HRV)	A20B–3300–0244	08	Applicable servo software: Series 90B0
Axis control card (Learning–control axis control)	A20B–3300–0246	08	Applicable servo software: Series 90B3/90B7
Axis control card (Learning–control axis control, high–speed HRV)	A20B–3300–0247	08	Applicable servo software: Series 90B3/90B7
Power supply unit	A20B–8100–0720	–	
FROM/SRAM module (FROM 16MB, SRAM 1MB)	A20B–3900–0160	FROM: C1 SRAM: 03	
FROM/SRAM module (FROM 16MB, SRAM 2MB)	A20B–3900–0161	FROM: C1 SRAM: 04	
FROM/SRAM module (FROM 16MB, SRAM 3MB)	A20B–3900–0162	FROM: C1 SRAM: 05	

Name	Drawing number	ID	Remarks
FROM/SRAM module (FROM 32MB, SRAM 1MB)	A20B–3900–0163	FROM: C2 SRAM: 03	
FROM/SRAM module (FROM 32MB, SRAM 2MB)	A20B–3900–0164	FROM: C2 SRAM: 04	
FROM/SRAM module (FROM 32MB, SRAM 3MB)	A20B–3900–0165	FROM: C2 SRAM: 05	
FROM/SRAM module (FROM 16MB, SRAM 256kB)	A20B–3900–0180	FROM: C1 SRAM: 01	
FROM/SRAM module (FROM 16MB, SRAM 512kB)	A20B–3900–0181	FROM: C1 SRAM: 02	
FROM/SRAM module (FROM 32MB, SRAM 256kB)	A20B–3900–0182	FROM: C2 SRAM: 01	
FROM/SRAM module (FROM 32MB, SRAM 512kB)	A20B–3900–0183	FROM: C2 SRAM: 02	
Analog spindle module	A20B–3900–0170	–	
DRAM module (4MB)	A20B–3900–0042	85	For option board
PMC–RE board	A20B–8100–0150	1xCD	
C language board	A20B–8100–0261	0xCD	
Serial communication board A	A20B–8100–0262	2xCD	Remote buffer/DNC2
Serial communication board B	A20B–8100–0263	3xCD	DNC1
Symbol CAP*i* T board	A20B–8100–0264	4xCD	
Sub CPU board	A20B–8002–0190	1xCE	
RISC board	A20B–8002–0040	xxCA	
DATA SERVERboard	A20B–8100–0271	3xDB	
ADD–ON board	A20B–2002–0960	–	
Loader control board	A20B–8100–0830	1xD3	
HSSB interface board	A20B–8001–0641	ExAA	
I/O Link–II board	A20B–8100–0250	0x95	
PROFIBUS board	A20B–8100–0430	0xBB	
ADD–ON board	A20B–2100–0430	–	
Ethernet board	A20B–8100–0271	3xDB	10BASE–T
DeviceNet interface board	A20B–8001–0880	1xF3	
Backpanel (2 slots)	A20B–2003–0150	–	
Backpanel (3 slots)	A20B–2003–0230	–	
Backpanel (4 slots)	A20B–2003–0240	–	

Name	Drawing number	ID	Remarks
Inverter (for 9.5″ /7.2″ monochrome LCD)	A20B–8100–0710	–	
Inverter (for 10.4″ color LCD)	A20B–8001–0920	–	
Inverter (for 8.4″ color LCD)	A20B–8001–0922	–	
PC–side HSSB interface board (2CH, applicable to ISA bus)	A20B–8001–0582	–	
PC–side HSSB interface board (1CH, applicable to ISA bus)	A20B–8001–0583	–	
PC–side HSSB interface board (2CH, applicable to PCI bus)	A20B–8001–0960	–	
PC–side HSSB interface board (1CH, applicable to PCI bus)	A20B–8001–0961	–	
Touch panel control board	A20B–8001–0620	–	

2.5.5 I/O

Name	Drawing number	Remarks
Distributed I/O connector panel I/O module A1	A20B–2002–0470	DI/DO= 72/56 DI=general 16, matrix 56, with MPG interface
Distributed I/O connector panel I/O module B1	A20B–2002–0520	DI/DO=48/32, with MPG interface
Distributed I/O connector panel I/O module B2	A20B–2002–0521	DI/DO=48/32
Distributed I/O connector panel I/O basic module	A03B–0815–C001	DI/DO=24/16
Distributed I/O connector panel I/O expansion module A	A03B–0815–C002	DI/DO=24/16, with MPG interface
Distributed I/O connector panel I/O expansion module B	A03B–0815–C003	DI/DO: 24/16
Distributed I/O connector panel I/O expansion module C	A03B–0815–C004	DO: 16 (2A output)
Distributed I/O connector panel I/O expansion module D	A03B–0815–C005	Analog input
Distributed I/O machine operator’s panel (Small, Symbol keysheet)	A02B–0236–C141#TBS	DI=24, with MPG interface
Distributed I/O machine operator’s panel (Small, English keysheet)	A02B–0236–C141#TBR	DI=24, with MPG interface
Distributed I/O machine operator’s panel (Standard, Symbol keysheet)	A02B–0236–C140#TBS	DI=24, with MPG interface
Distributed I/O machine operator’s panel (Standard, English keysheet)	A02B–0236–C140#TBR	DI=24, with MPG interface
Distributed I/O machine operator’s panel (290mm–wide, Symbol keysheet)	A02B–0236–C150#TBS	DI=24, with MPG interface
Distributed I/O machine operator’s panel (290mm–wide, English keysheet)	A02B–0236–C150#TBR	DI=24, with MPG interface
Main panel A machine operator’s panel (Symbol keyboard)	A02B–0236–C230	With MDI
Main panel A1 machine operator’s panel (English keyboard)	A02B–0236–C240	With MDI
Main panel B machine operator’s panel (Symbol keyboard)	A02B–0236–C231	Without MDI
Main panel B1 machine operator’s panel (English keyboard)	A02B–0236–C241	Without MDI
Sub panel A machine operator’s panel	A02B–0236–C232	
Sub panel B machine operator’s panel	A02B–0236–C233	
Sub panel B1 machine operator’s panel	A02B–0236–C235	
Sub panel C machine operator’s panel	A02B–0236–C234	
Operator’s panel connector unit (Sink type output A)	A16B–2200–0661	DI/DO: 64/32
Operator’s panel connector unit (Sink type output B)	A16B–2200–0660	DI/DO: 96/64
Operator’s panel connector unit (Source type output A)	A16B–2202–0731	DI/DO: 64/32
Operator’s panel connector unit (Source type output B)	A16B–2202–0730	DI/DO: 96/64
Machine operator’s panel interface unit	A16B–2201–0110	
Loader I/O board	A02B–0236–C160	
Loader I/O board	A02B–0236–C161	Matrix supported
FANUC I/O Link–AS–i converter	A03B–0817–C001	

2.5.6
Other Units

Name	Drawing number	Remarks
Separate detector interface unit (basic 4 axes)	A02B–0236–C205	
Separate detector interface unit (additional 4 axes)	A02B–0236–C204	
Spindle distributed adapter	A13B–0180–B001	
I/O Link distributed adapter	A20B–1007–0680	
Optical I/O Link adapter	A13B–0154–B001	

2.6 REPLACING THE MOTHERBOARD

WARNING

Only those personnel who have received approved safety and maintenance training may perform this replacement work.

When opening the cabinet and replacing the board, be careful not to touch the high–voltage circuits (marked ⚠ and fitted with an insulating cover). Touching the uncovered high–voltage circuits presents an extremely dangerous electric shock hazard.

CAUTION

Before starting replacement work, back up the contents (such as parameters and programs) of the SRAM memory of the CNC. Otherwise, the contents of the SRAM memory may be lost during replacement work.

- **Replacement procedure**

1) Unscrew the four screws fastening the case, and remove the case. The fan and battery cable do not have to be removed.
If the unit has a touch panel, the touch panel control PCB is on the left when viewed from the back of the basic unit. Before removing the case, remove the cables connected to this touch panel control PCB (connectors CN1 and CD37).

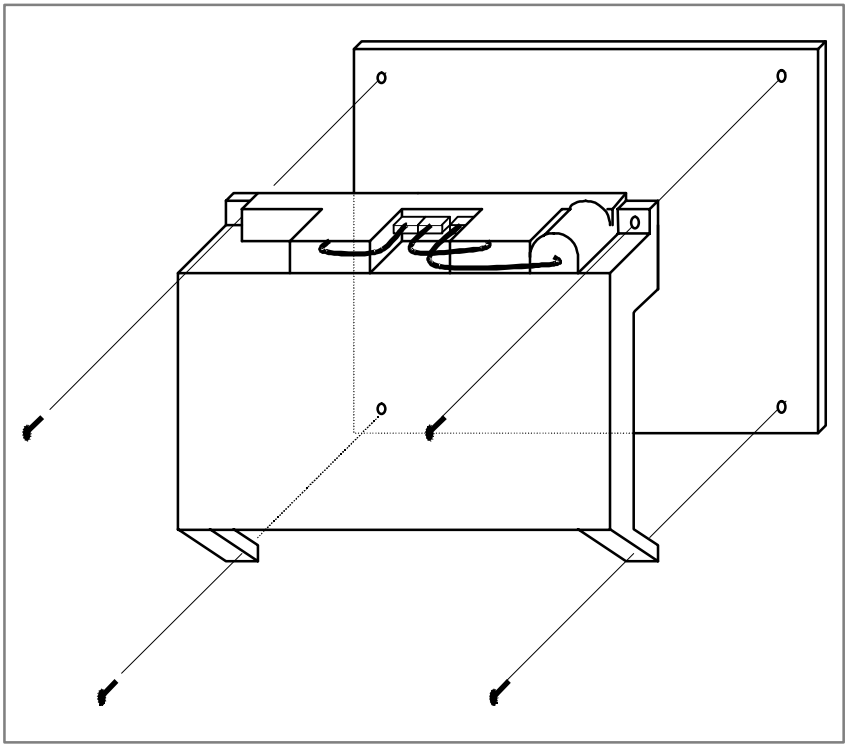

2) Remove the cables from connectors CNM1A (PCMCIA interface connector), CN8 (video signal interface connector) and CN2 (soft key connector) on the motherboard. Then, unscrew the screws fastening the motherboard. The connector CN3 (inverter connector) directly connects the motherboard to the inverter PCB. Slide the motherboard downward when removing the motherboard.

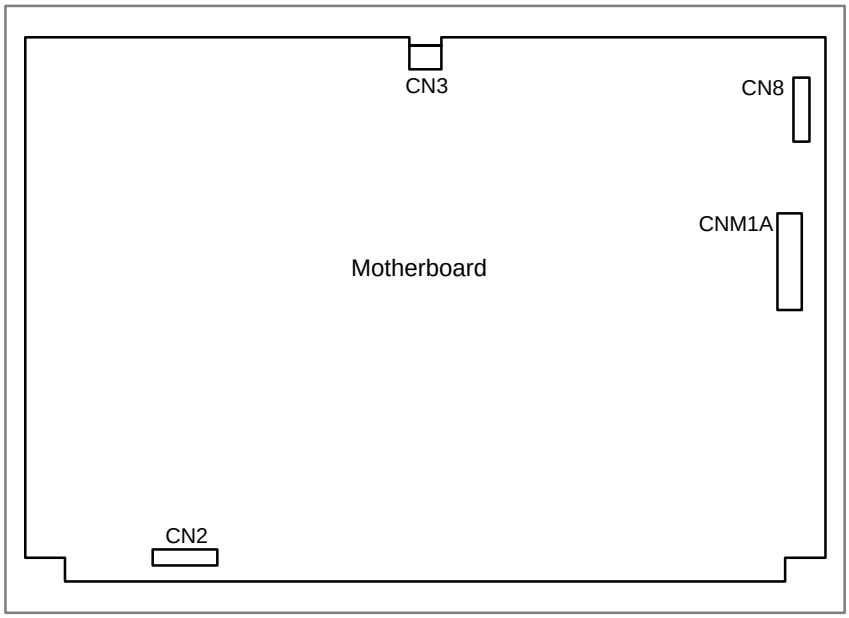

3) When mounting the motherboard, reverse steps 1) and 2).

2.7 REPLACING FUSE ON CONTROL UNIT

WARNING

Before replacing a blown fuse, locate and remove the cause of the blown fuse.
For this reason, only those personnel who have received approved safety and maintenance training may perform this replacement work.
When opening the cabinet and replacing a fuse, be careful not to touch the high–voltage circuits (marked ⚠ and fitted with an insulating cover). Touching the uncovered high–voltage circuits presents an extremely dangerous electric shock hazard.

- **Fuse mounting location**

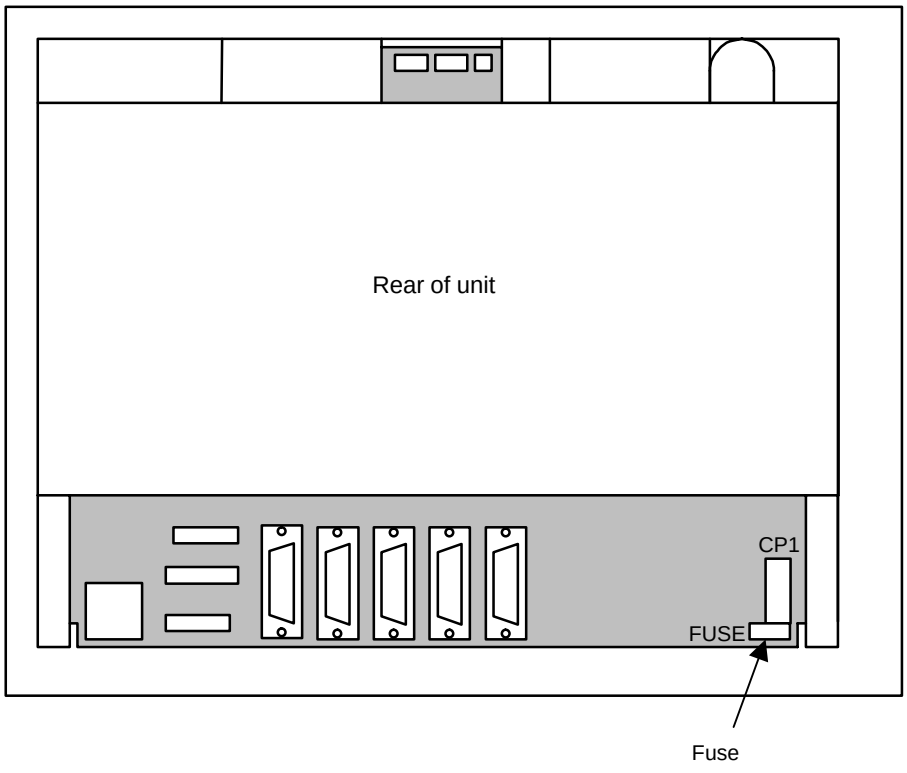

- **Ordering codes of fuses**

Ordering code	Rating	Parts specification
A02B–0236–K100	5A	A60L–0001–0290#LM50C

2.8 REPLACING BATTERY

Part programs, offset data, and system parameters are stored in CMOS memory in the control unit. The power to the CMOS memory is backed up by a lithium battery mounted on the front panel of the control unit. The above data is not lost even when the main battery goes dead. The backup battery is mounted on the control unit at shipping. This battery can maintain the contents of memory for about a year.
When the voltage of the battery becomes low, alarm message “BAT” blinks on the display and the battery alarm signal is output to the PMC. When this alarm is displayed, replace the battery as soon as possible. In general, the battery can be replaced within two or three weeks, however, this depends on the system configuration.
If the voltage of the battery becomes any lower, memory can no longer be backed up. Turning on the power to the control unit in this state causes system alarm 910 (SRAM parity alarm) or 935 (SRAM ECC error) to occur because the contents of memory are lost. Clear the entire memory and reenter data after replacing the battery.
The following two kinds of batteries can be used.

- Lithium battery built into the CNC control unit.
- Two alkaline dry cells (size D) in the external battery case.

NOTE
A lithium battery is installed as standard at the factory.

● Replacement procedure

When a lithium battery is used
Prepare a new lithium battery (ordering code: A02B–0200–K102 (FANUC specification: A98L–0031–0012)).

1) Turn on the power to the CNC. After about 30 seconds, turn off the power.
2) Remove the old battery from the top of the CNC control unit.
   First, unplug the battery connector, then take the battery out of its case.
   The battery case of a control unit without option slots is located at the top end of the unit as shown in the figure of the previous page. The battery case of a control unit with 2 slots or 4 slots is located in the central area of the top of the unit (between fans).
3) Insert a new battery and reconnect the connector.

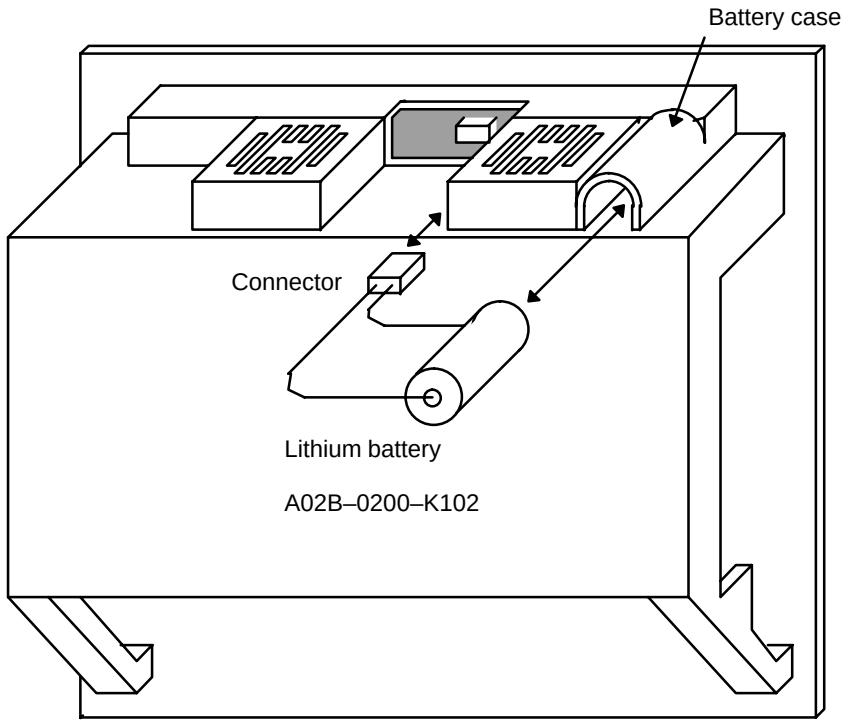

WARNING

Using other than the recommended battery may result in the battery exploding. Replace the battery only with the specified battery (A02B–0200–K102).

CAUTION

Steps 1) to 3) should be completed within 30 minutes. Do not leave the control unit without a battery for any longer than the specified period. Otherwise, the contents of memory may be lost.

If steps 1) to 3) may not be completed within 30 minutes, save all contents of the SRAM memory to the memory card beforehand. Thus, if the contents of the SRAM memory are lost, the contents can be restored easily.

For the method of operation, refer to 4.9 or C.2.2.

When discarding a battery, observe the applicable ordinances or other rules of your local government. Also, cover the terminals of the battery with vinyl tape or the like to prevent a short–circuit.

When using commercial alkaline dry cells (size D)

- **Method of connection**

Power from the external batteries is supplied through the connector to which the lithium battery is connected.

The lithium battery, provided as standard, can be replaced with external batteries in the battery case (A02B–0236–C281) according to the battery replacement procedure described above.

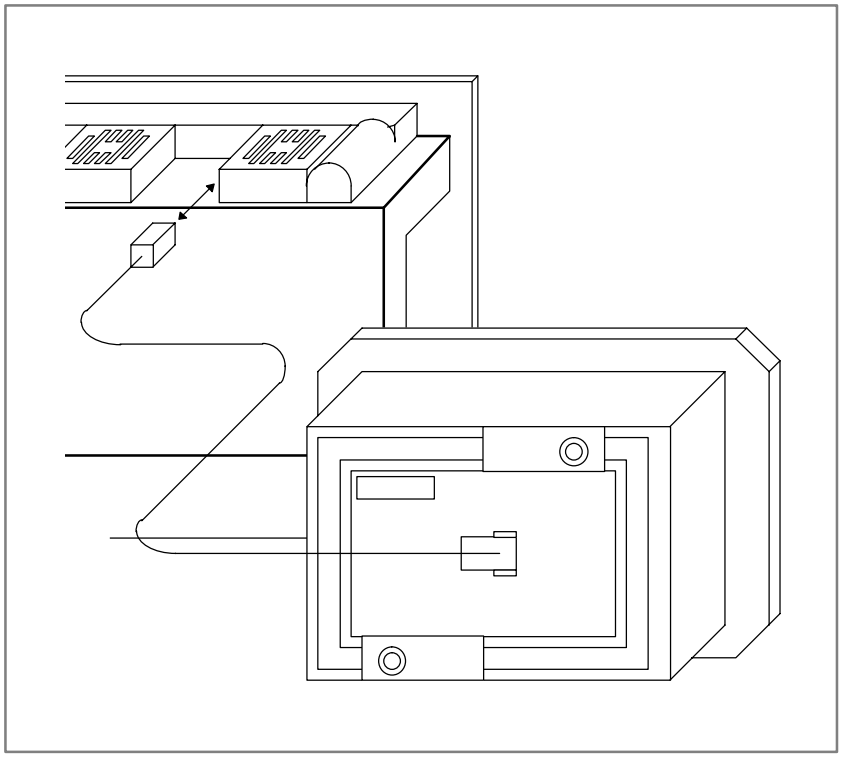

CAUTION
1 Install the battery case (A02B–0236–C281) in a location where the batteries can be replaced even when the power to the control unit is on.
2 The battery cable connector is attached to the control unit by means of a simple lock system. To prevent the connector from being disconnected due to the weight of the cable or tension within the cable, fix the cable section within 50 cm of the connector.

Replacing commercial alkaline dry cells (size D)

1) Prepare two alkaline dry cells (size D) commercially available.
2) Turn on the power to the control unit.
3) Remove the battery case cover.
4) Replace the cells, paying careful attention to their orientation.
5) Reinstall the cover onto the battery case.

CAUTION
When replacing the alkaline dry cells while the power is off, use the same procedure as that for lithium battery replacement described above.

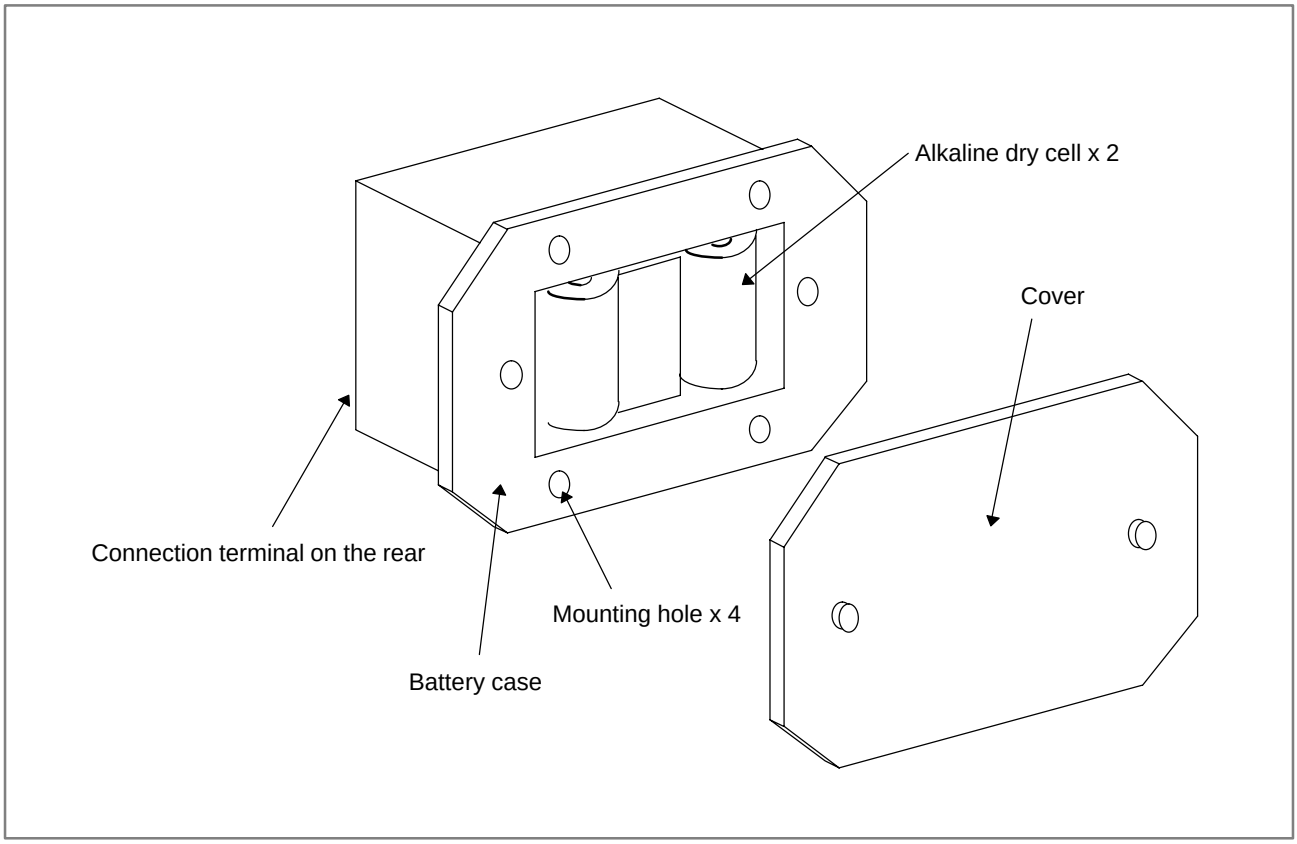

2.9 REPLACING FAN MOTORS

WARNING

When opening the cabinet and replacing a fan motor, be careful not to touch the high–voltage circuits (marked ⚠ and fitted with an insulating cover).

Touching the uncovered high–voltage circuits presents an extremely dangerous electric shock hazard.

- **Fan ordering information**

	Ordering information	Required quantity
Unit with no option slot	A02B-0236-K120	2
Unit with 2 option slots	A02B-0281-K121	2
Unit with 3 option slots	A02B-0281-K121	2
	A02B-0236-K122	2
Unit with 4 option slots	A02B-0281-K121	4

Replacement procedure

- **For units with no expansion slots and units with 2 expansion slots**

1. Before replacing a fan motor, turn off the power to the CNC.
2. Unplug the connector of a fan motor to be replaced ((1) of Fig. a). The connector is latched. So, when unplugging the connector, hold down the latch placed at the lower part of the connector with a flat–blade screwdriver.
3. Detach the latch securing the fan motor, then demount the fan motor ((2) of Fig. a).
4. Insert a new fan motor into the fan case ((3) of Fig. a), then reconnect the connector.

Fig. a

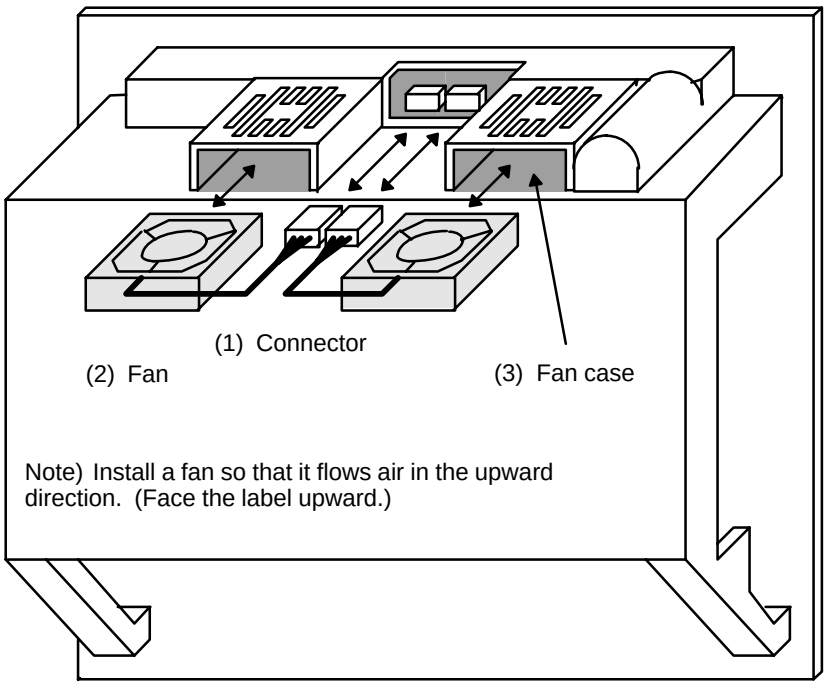

- **For units with 3 or 4 expansion slots**

1. Before replacing a fan motor, turn off the power to the CNC.
2. Unplug the connector of a fan motor to be replaced ((1) of Fig. b). The connector is latched. So, when unplugging the connector, hold down the latch placed at the lower part of the connector with a flat–blade screwdriver.
3. Detach the latch securing the fan cover ((3) of Fig. b), then demount the fan cover from the unit.
4. The fan is secured to the fan cover. Detach the latch, then demount the fan motor ((2) of Fig. b).
5. Install a new fan motor onto the fan cover. Then, reinstall the fan cover onto the unit, and reconnect the connector.

Fig. b

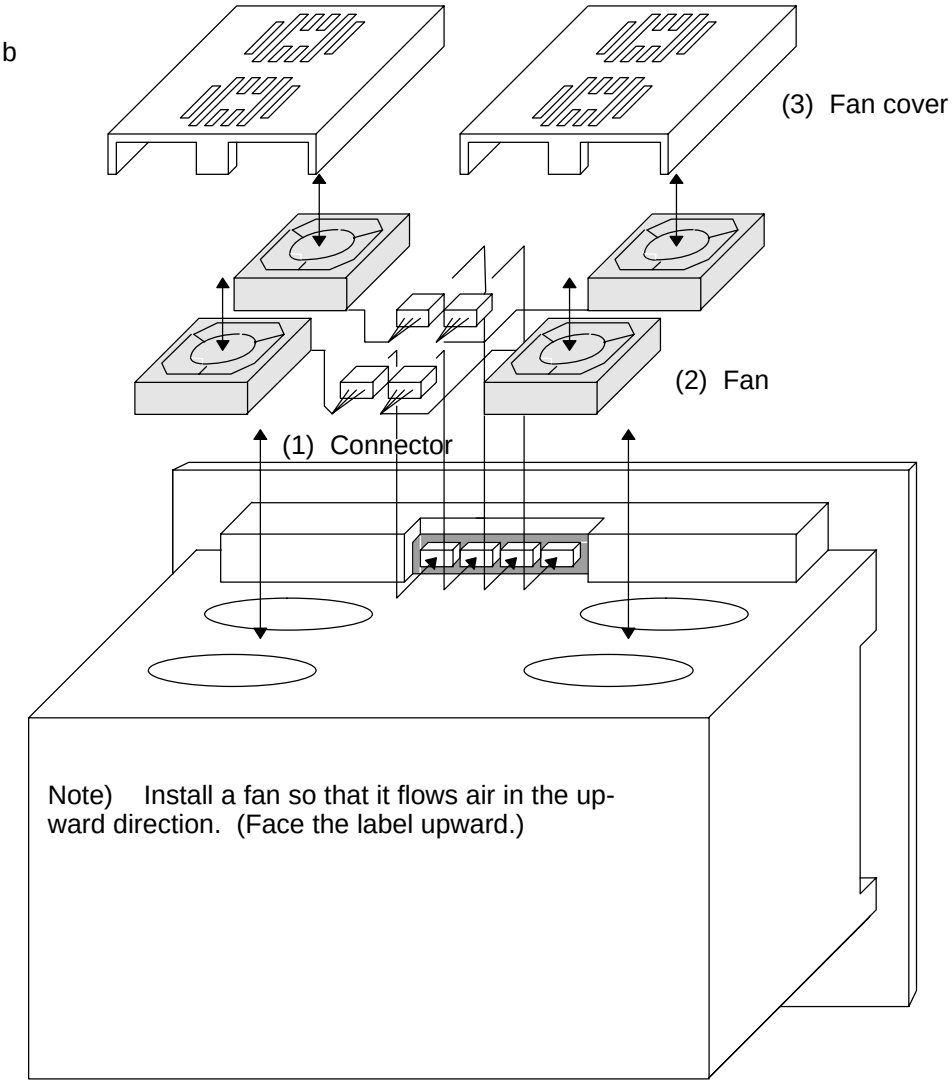

2.10 REPLACING LCD BACKLIGHT

WARNING

Only those personnel who have received approved safety and maintenance training may perform this replacement work.

When opening the cabinet and replacing a unit, be careful not to touch the high–voltage circuits (marked ⚠ and fitted with an insulating cover).

Touching the uncovered high–voltage circuits presents an extremely dangerous electric shock hazard.

CAUTION

Before starting replacement work, back up the contents (such as parameters and programs) of the SRAM memory of the CNC. Otherwise, the contents of the SRAM memory may be lost during replacement work.

- **Backlight ordering information**

Backlight		Ordering information	Individual ordering information
For 7.2″ LCD	Made by Hitachi	A02B-0236-K112	A61L-0001-0142#BL
	Made by Sharp		A61L-0001-0142#BLS
For 8.4″ LCD		A02B-0236-K119	A61L-0001-0176#BL
For 9.5″ LCD		A02B-0281-K114	A61L-0001-0154#BLC

NOTE

The back–light of the 10.4″ color LCD cannot be replaced.

- **Replacement procedure**

1) Detach the flat cable for soft keys, then detach the escutcheon from the CNC.

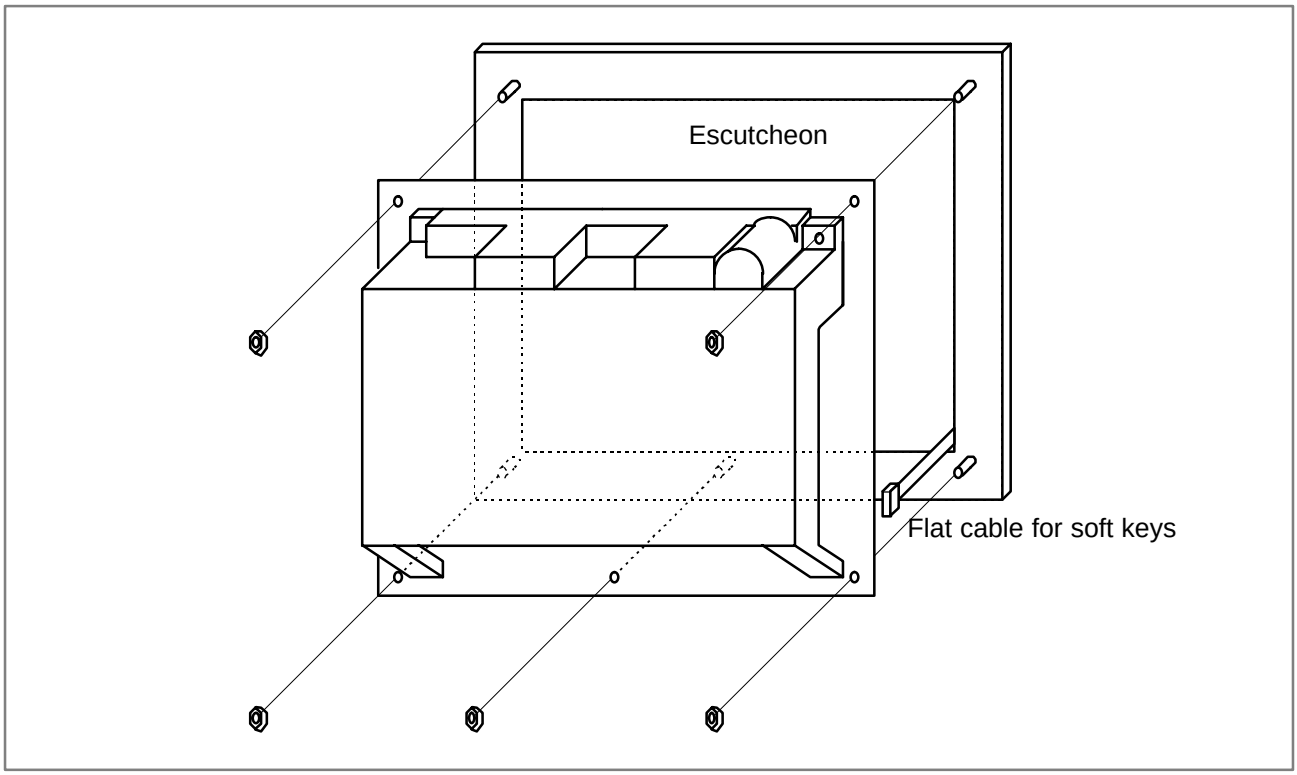

2) As shown below, unplug the connectors CP1 and CN8 to detach the LCD unit from the CNC unit.

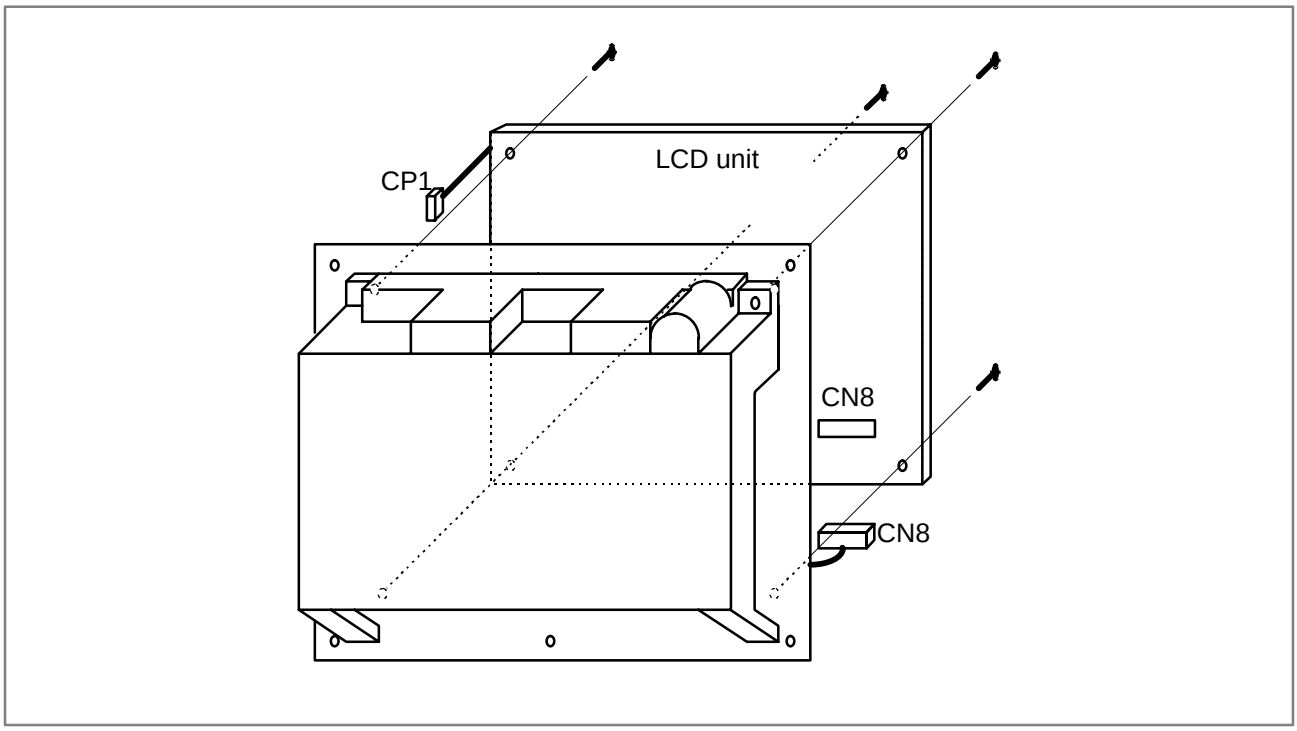

3)–1 For the 7.2″ LCD units (monochrome) manufactured by Hitachi
Remove the three brackets from the left part on the front of the LCD unit, and remove the cover. Then, the backlight is exposed. Replace the backlight with a new one.

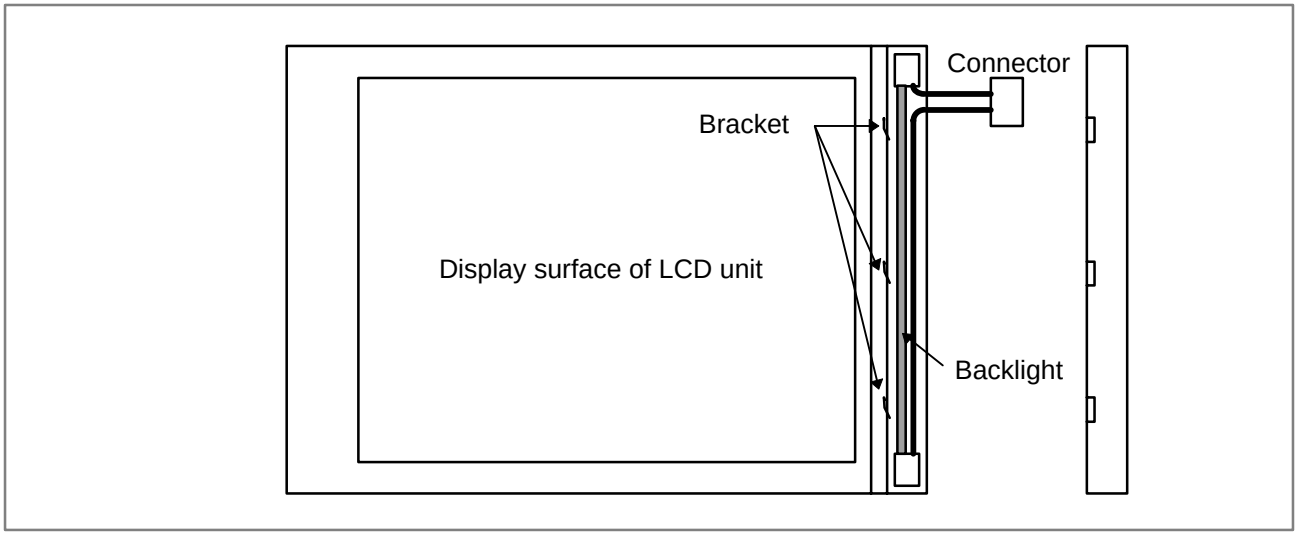

3)–2 For the 7.2″ LCD unit (monochrome) manufactured by Sharp
Remove the three screws from the left part on the front of the LCD unit, and remove the cover. Then, the backlight is exposed. Replace the backlight with a new one.

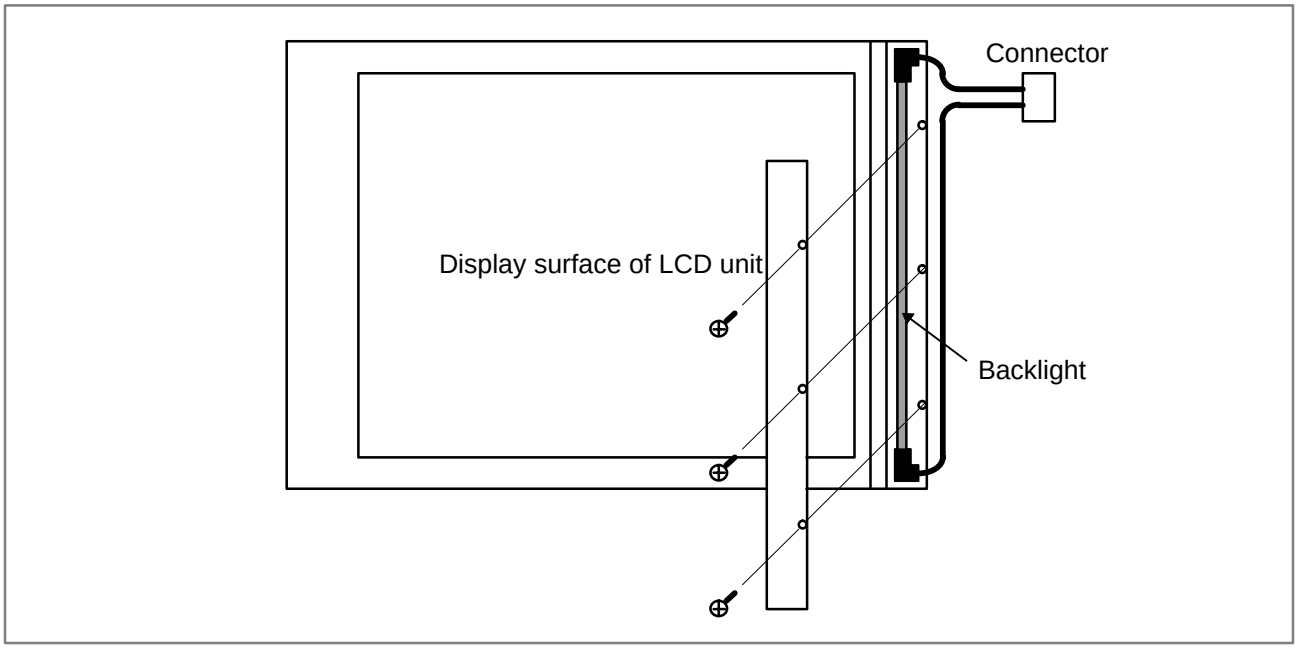

3)–3 For the 8.4″ LCD (color)

As shown below, remove two bolts, remove the backlight case by pulling it down and sliding it slightly to the left, then replace the backlight.

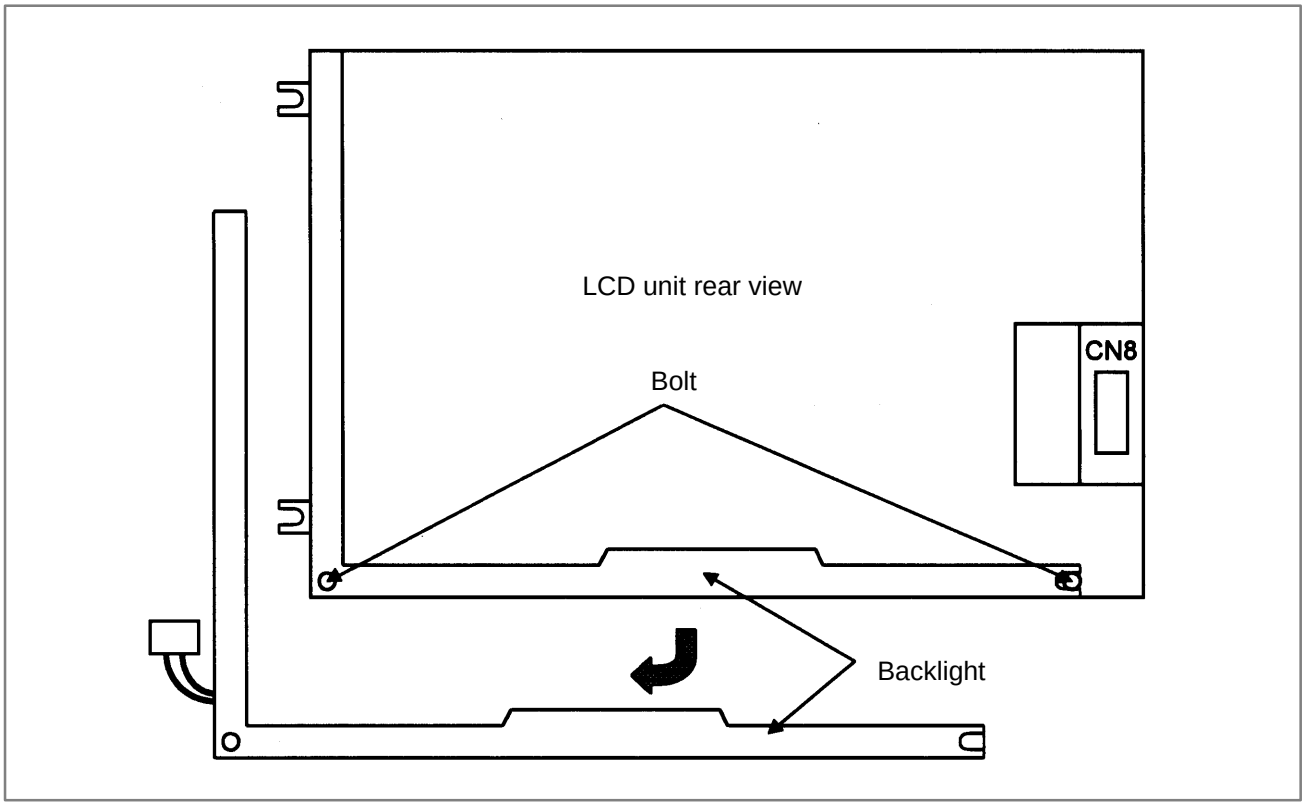

3)–4 For the 9.5″ LCD units (monochrome)

Remove the three brackets from the left part on the front of the LCD unit. Remove the cover. The backlight is covered with a sheet. Pull out the sheet. Then, the backlight is exposed. Replace the backlight with a new one.

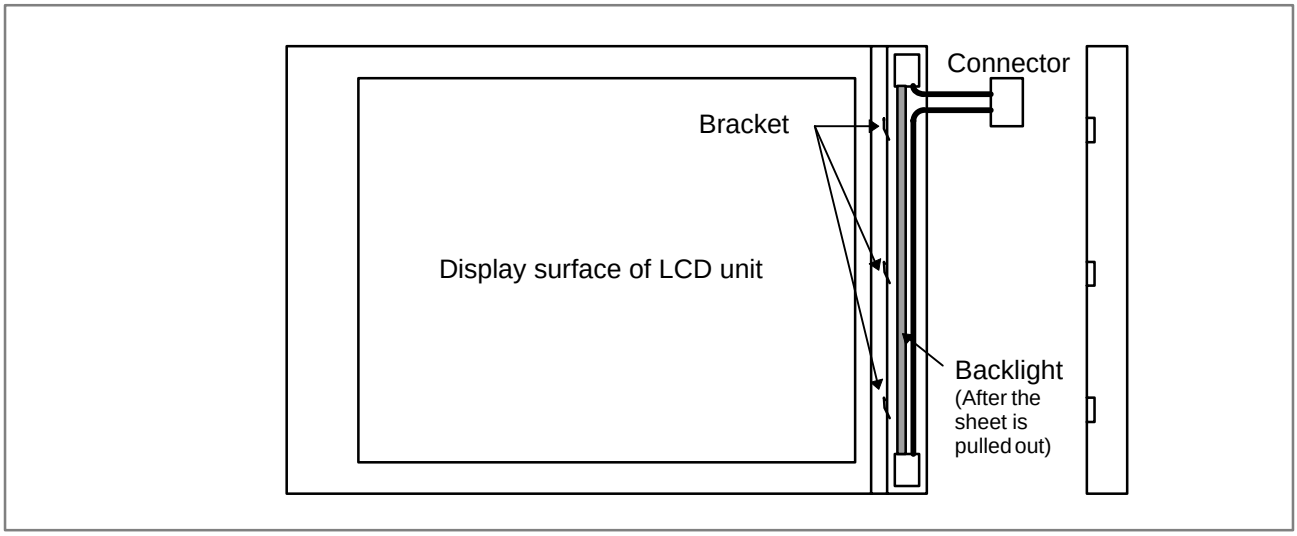

4) Upon completion of replacement, reassemble the unit by reversing the steps 1 through 3 above.

2.11 HEAT GENERATED IN EACH UNIT

Unit		Amount of generated heat	Remarks
Control unit	No option slot	33W	(NOTE 1)
	2 option slots	37W	
	3 option slots	39W	
	4 option slots	40W	
Option boards	HSSB board	3W	
	Sub–CPU board	13W	
	Loader control board	10W	
	PMC C board	5W	
	Serial communication board	6W	
	Symbol CAP*i* T board	10W	
	RISC board	9W	
	Data server board	6.3W	0.3 W generated in ATA card included (NOTE 4)
	I/O link II board	9W	
	Ethernet board	6W	
	DeviceNet interface board	4W	
	PROFIBUS board	9W	

NOTE
1 The amount of heat generated in the LCD and MDI units is included, but that in each option board is not.
2 The amount of heat generated in the ISA expansion board varies from one model to another. Add the amount of heat generated in the ISA board to be used.
3 The amount of heat generated in the ATA flash card may vary depending on its memory capacity, changes made to the card specification, and other factors.
4 When using option boards, keep the total amount of heat generated in the selected option boards to within the corresponding value listed in the following table.

Option slot	Total amount of generated heat
2 slots	26W
3 slots	38W
4 slots	38W

Unit	Amount of generated heat	Remarks
MDI unit	0W	
Operator's panel I/O module	12W	(NOTE 1)
Connector panel I/O module (basic)	8W	(NOTE 1)
Connector panel I/O module (expansion)	5W	(NOTE 1)
Separate detector interface unit	9W	Only for unit with four basic axes
Separate detector interface unit	14W	Four basic axes and four additional axes (NOTE 2)

NOTE
1 This value applies when 50% of the module inputs are on.
2 The amount of heat generated in the separate detector is not included.

3 LCD–MOUNTED TYPE *is* SERIES HARDWARE

This chapter describes the LCD–mounted type FS160*is*/180*is*/210*is* hardware.
See Chapter 4 ”STAND–ALONE TYPE *i* SERIES HARDWARE,” for stand–alone type 160*is*/180*is*/210*is* hardware.

3.1 HARDWARE CONFIGURATION 246
3.2 HARDWARE OVERVIEW 246
3.3 TOTAL CONNECTION DIAGRAMS 246
3.4 FS160*is*/180*is*/210*is* MOTHERBOARD 247
3.5 CE CARD 258
3.6 INSTALLING AND REMOVING OPTIONAL BOARDS 259
3.7 LIST OF UNITS AND PRINTED CIRCUIT BOARDS 264
3.8 REPLACING THE FUSE ON THE UNITS 265
3.9 REPLACING THE BATTERY 266
3.10 REPLACING THE FAN MOTOR 266
3.11 REPLACING THE LCD BACK–LIGHT 267
3.12 REPLACING THE TOUCH PANEL PROTECTION SHEET 267
3.13 BACKUP UNIT 268

3.1 HARDWARE CONFIGURATION

See section 2.1 for hardware configuration of 160*i*s/180*i*s/210*i*s.

3.2 HARDWARE OVERVIEW

See section 2.2 for hardware overview of 160*i*s/180*i*s/210*i*s.

3.3 TOTAL CONNECTION DIAGRAMS

For the 160*i*s/180*i*s/210*i*s, the following connection is required, in addition to the connection common to the 16*i*/18*i*/21*i*/160*i*s/180*i*s/210*i*s.

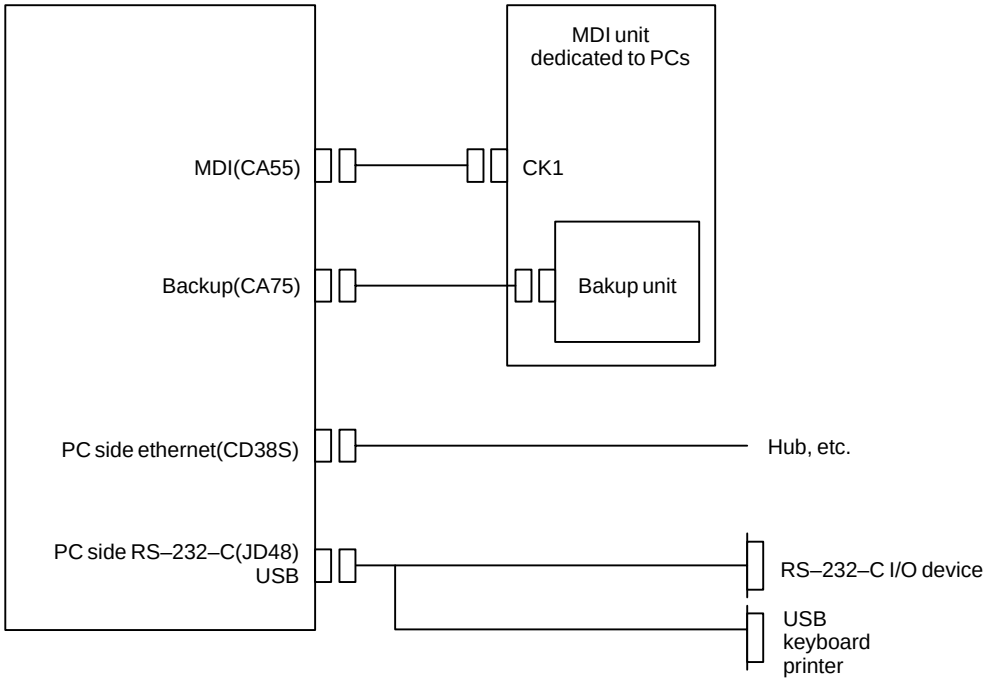

See Section 2.3, ”TOTAL CONNECTION DIAGRAMS” for connection other than the above.

3.4 FS160*is*/180*is*/210*is* MOTHERBOARD

● Specifications

Item	Code
Series 160*is* motherboard	A20B–8100–0790
Series 180*is* motherboard	A20B–8100–0791
Series 210*is* motherboard (PMC–SA1)	A20B–8100–0794
Series 210*is* motherboard (PMC–SB7)	A20B–8100–0795

- **Mounting positions of connectors**

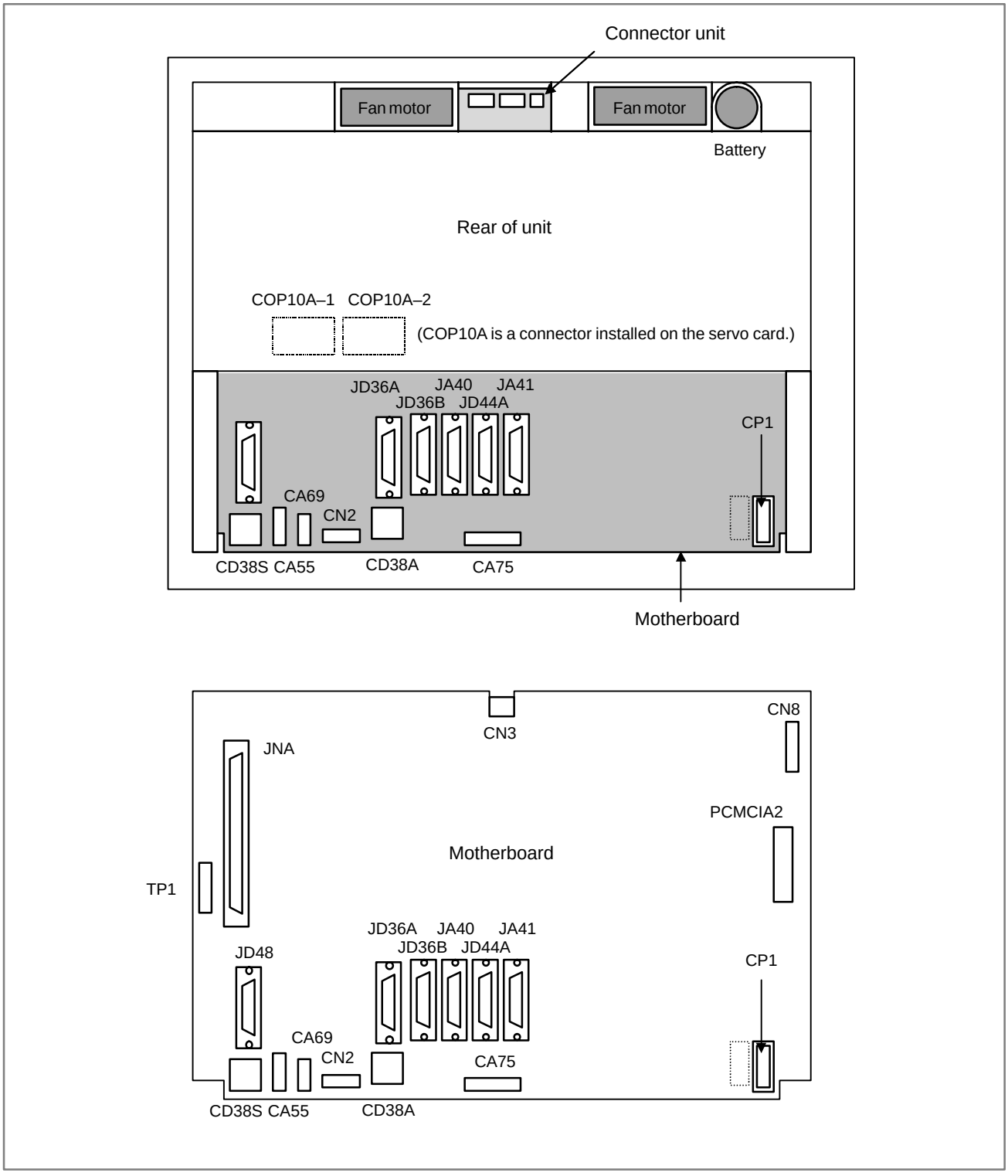

Connector number	Use
JD48	PC side RS232C, USB
COP10A–1, COP10A–2	Servo motor (FSSB)
CA55	MDI
CA69	Servo check
JD36A	RS232C serial port
JD36B	RS232C serial port
JA40	Analog output/High–speed DI
JD44A	I/O Link
JA41	Serial spindle/Position coder
CP1	DC24V–IN
CD38A	Ethernet(10BASE–T/100BASE–TX)
CD38S	PC side Ethernet(10BASE–T/100BASE–TX)
TP1	Touch panel
CA75	Backup unit
JNA	F–BUS interface
CN8	Video signal interface
PCMCIA2	PCMCIA interface

- **Mounting positions of cards**

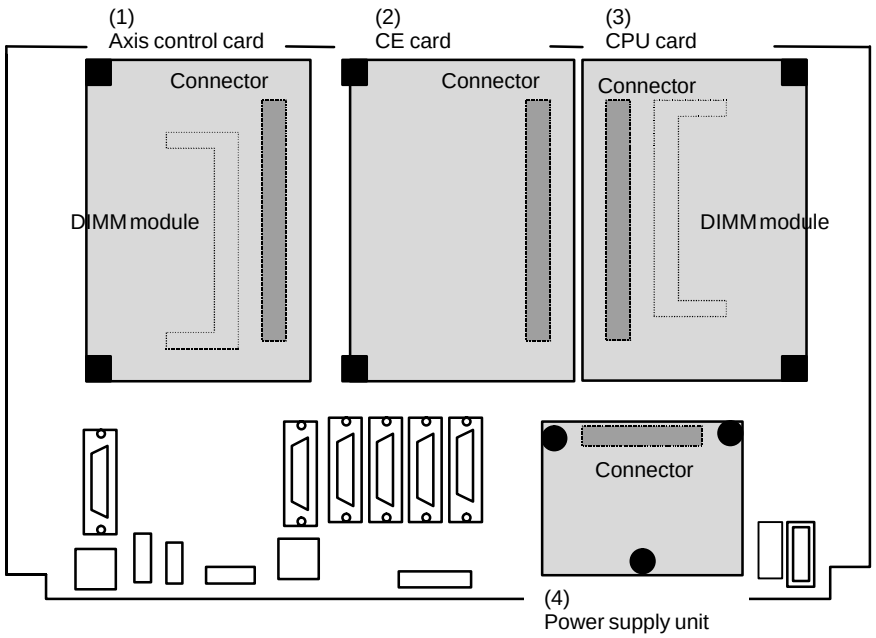

No.	Name		Code	Function	Remarks
(1)	Axis control card		A20B–3300–0033	Axis control 2–axes	Servo software Series 9090
			A20B–3300–0032	Axis control 4–axes	
			A20B–3300–0243	Axis control 2–axes	Servo software Series 90B0
			A20B–3300–0242	Axis control 4–axes	
			A20B–3300–0241	Axis control 6–axes	
			A20B–3300–0240	Axis control 8–axes	
			A20B–3300–0248	Axis control 4–axes	Servo software Series 90B0 (High–speed HRV)
			A20B–3300–0245	Axis control 6–axes	
			A20B–3300–0244	Axis control 8–axes	
			A20B–3300–0246	Learning controlled axis control	Servo software Series 90B3/90B7
			A20B–3300–0247	Learning controlled axis control	Servo software Series 90B3/90B7(High–speed HRV)
(2)	CE card	CE card 1	A20B–3300–0330	For 10.4” color LCD	
		CE card 2	A20B–3300–0320	Win CE CPU	

No.	Name	Code	Function	Remarks
(3)	CPU card	A20B–3300–0310	For Series 160*i*s/ 180*i*s DRAM 16MB	
		A20B–3300–0311	For Series 160*i*s/ 180*i*s DRAM 32MB	
		A20B–3300–0291	For Series 210*i*s DRAM 16MB	
		A20B–3300–0290	For Series 210*i*s DRAM 32MB	
		A20B–3300–0312	For Series 210*i*s DRAM 16MB	When the series 210*i*s uses the PC's embedded Ethernet feature
		A20B–3300–0313	For Series 210*i*s DRAM 32MB	
(4)	Power supply unit	A20B–8100–0720		

NOTE
See Section 3.5, ”CE CARD” for the configuration of the CE card.

- **Mounting positions of DIMM module**

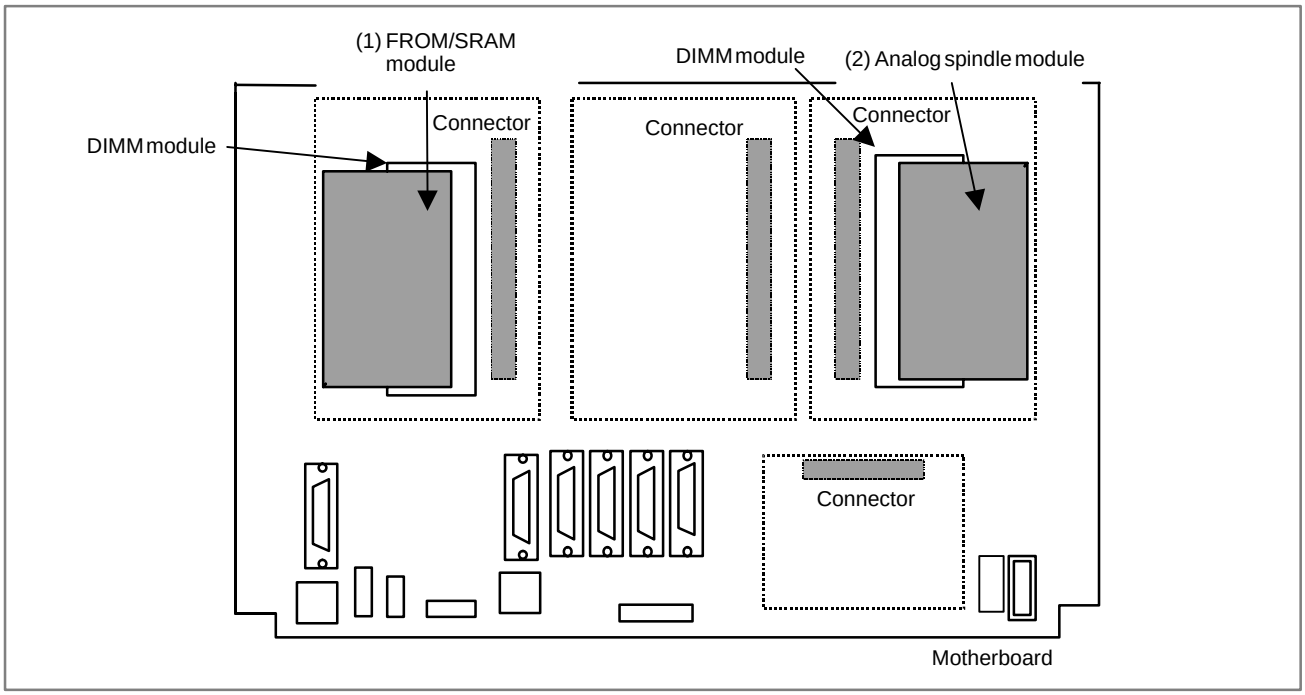

No.	Name	Code	Function	Remarks
(1)	FROM/SRAM module	A20B–3900–0160	FROM 16MB SRAM 1MB	FROM contains various types of control software. SRAM is battery–backed memory.
		A20B–3900–0161	FROM 16MB SRAM 2MB	
		A20B–3900–0162	FROM 16MB SRAM 3MB	
		A20B–3900–0163	FROM 32MB SRAM 1MB	
		A20B–3900–0164	FROM 32MB SRAM 2MB	
		A20B–3900–0165	FROM 32MB SRAM 3MB	
		A20B–3900–0180	FROM 16MB SRAM 256kB	
		A20B–3900–0181	FROM 16MB SRAM 512kB	
		A20B–3900–0182	FROM 32MB SRAM 256kB	
		A20B–3900–0183	FROM 32MB SRAM 512kB	
(2)	Analog spindle module	A20B–3900–0170	Analog spindle position coder	

- **Block diagram**

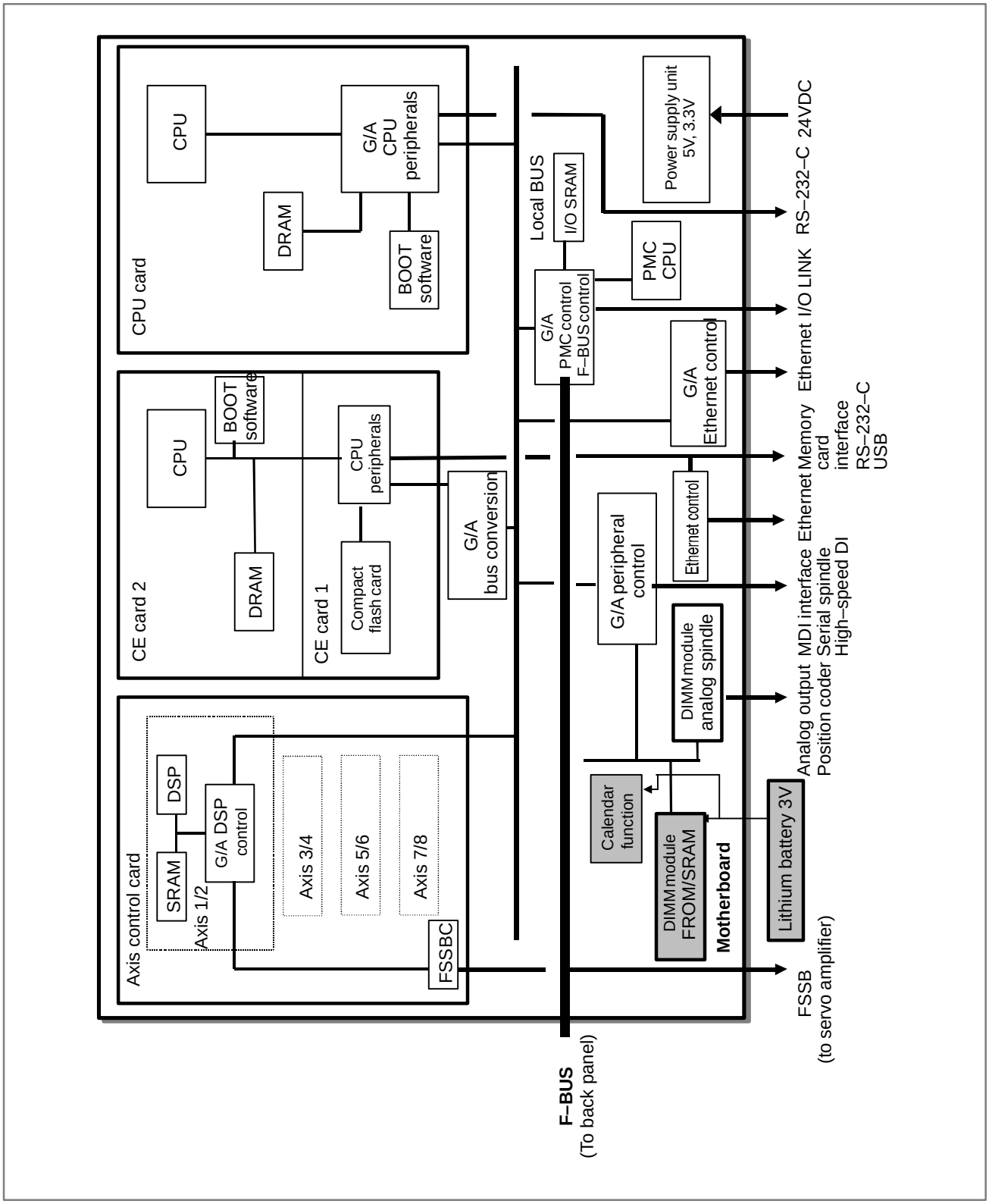

● LED display

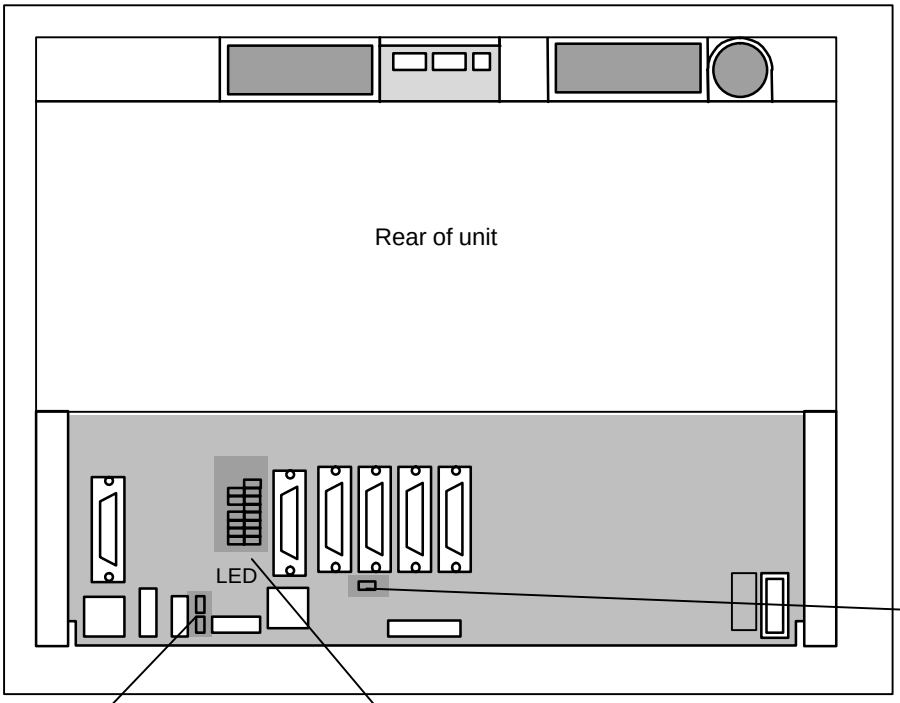

LINK

Indicates the link state of the Ethernet on the NC side. This LED lights when a link is established.

D2

Flashes while data is being sent or received over the Ethernet on the PC side.

D3

Lights when a link is established in 100 Mb/s mode over the Ethernet on the PC side.

PC POWER		Status (Green)
SYSFAIL	PARITY1	
PARITY2	SVALM	Alarm (Red)
	SYSEMG	
LED8	LED4	
LED7	LED3	Status (Green)
LED6	LED2	* LED1 to LED4 : NC side status LED5 to LED8 : PC side status
LED5	LED1	

See next page.

(1) Changes in status LED (green) indication at power–on time (NC side status : Green LED)

No.	Status LED 1.2.3.4	Status
1	□□□□	Power is not supplied.
2	■■■■	Initial status immediately after power is switched on; boot is running.
3	□■■■	System activation started.
4	■□■■	Waiting for each processor ID in the system to be set up.
5	□□■■	Each processor ID in the system has been set up.
6	■■□■	FANUC bus initialized.
7	□■□■	PMC initialized.
8	■□□■	Information about the hardware configuration of each printed–circuit board in the system has been set up.
9	□□□■	PMC ladder initialized.
10	□■■□	Waiting for digital servo to be initialized.
11	■■■□	Digital servo initialized.
12	■□□□	Initialization completed, and usual operation under way.

■: On □: Off

(2) Changes in status LED (green) indication at power–on time (PC side status : Green LED)

No.	Status LED (LED 5 to 8) 5.6.7.8	Status
1	□□□□	Power is not supplied.
2	■■■■	Initial status immediately after power is switched on.
3	■■■□	The NC to PC interface is being initialized.
4	■■□■	Waiting for the PC to boot.
5	■■□□	The NC screen is displayed on the PC.
6	■□□□	Operating normally after starting up successfully.

■: On □: Off

(3) Alarm LED (red) indication at system alarm occurrence
If any of these LEDs lights, it is likely that the hardware is defective.

Alarm LED	Meaning
SVALM	Servo alarm
SYSEMG	Lights when a system alarm occurs. The hardware has detected a failure in the system.
SYSFAIL	Lights when a system alarm occurs. Used by the software to stop the system. Lights while boot is under way.
PARITY1	SRAM parity alarm
PARITY2	Common RAM parity alarm between NC and PC

(4) Status LED (red) indication at error occurrence (PC side status : Green LED)

Status LED (LED 5 to 8) 5.6.7.8	Status
□■□□	Common RAM parity alarm between NC and PC

■: On □: Off

(5) PC POWER (green LED) lights when the CE card is powered on (including during backup operation).

- **Rotary switch setting**

For the LCD–mounted type, the startup sequence used during power–up can be changed by the rotary switch on the mother board.

Rotary switch setting	Contents
0	Setting for maintenance. The start menu is displayed. It is possible to start boot and IPL from the PC.
1	Setting for usual operation. The start menu is not displayed. It is impossible to start boot or IPL from the PC.
2	Setting for maintenance. Normally, this position is not used.
7	Setting for maintenance. The start menu is displayed when MDI keys <6> and <7> are pressed. It is possible to start boot or IPL from the PC.

See Appendix, ”MAINTENANCE OF OPEN CNC (BOOT–UP AND IPL),” for details on boot–up and IPL operations when the rotary switch is set to 0.

Mounting position of rotary switch (LCD–mounted type CNC)

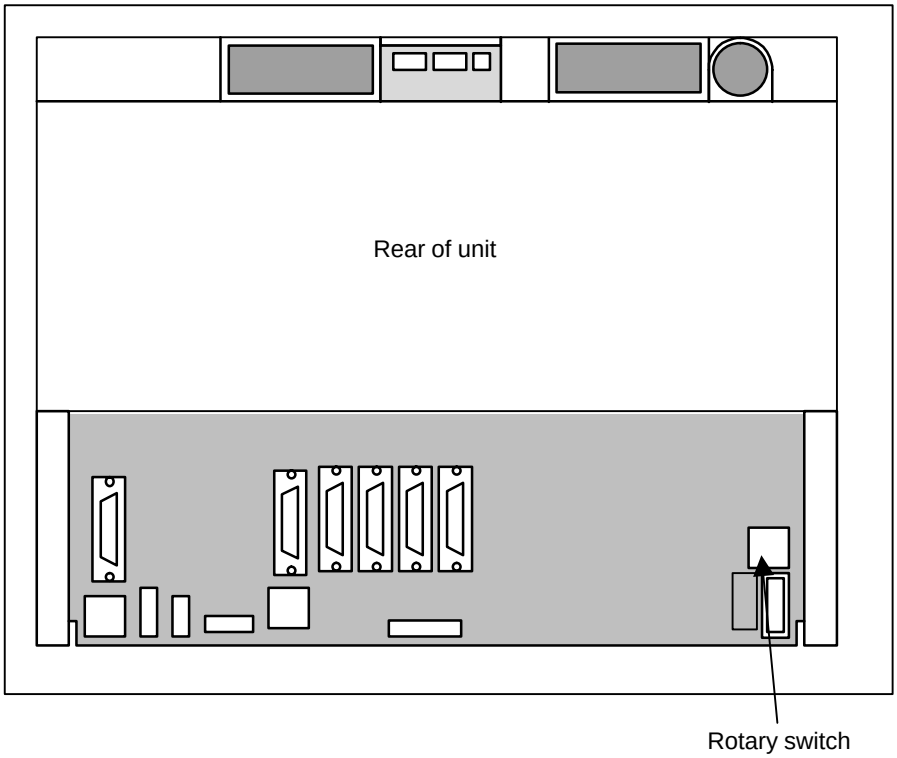

- **Short plug settings**

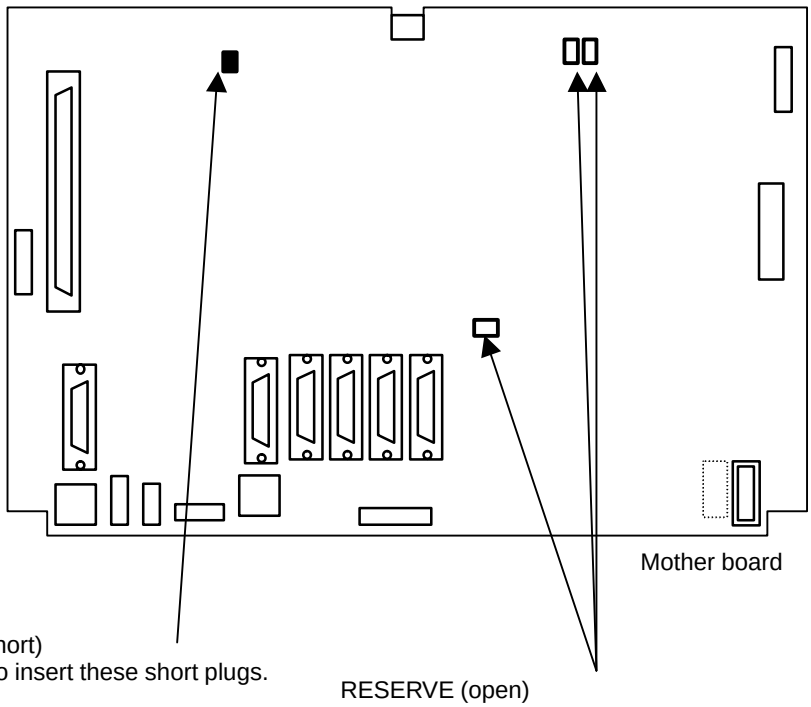

3.5 CE CARD

The CE card has a different configuration from other card printed–circuit boards.
CE cards 1 and 2 are combined and the compact flash card is attached.

- **CE card configuration**

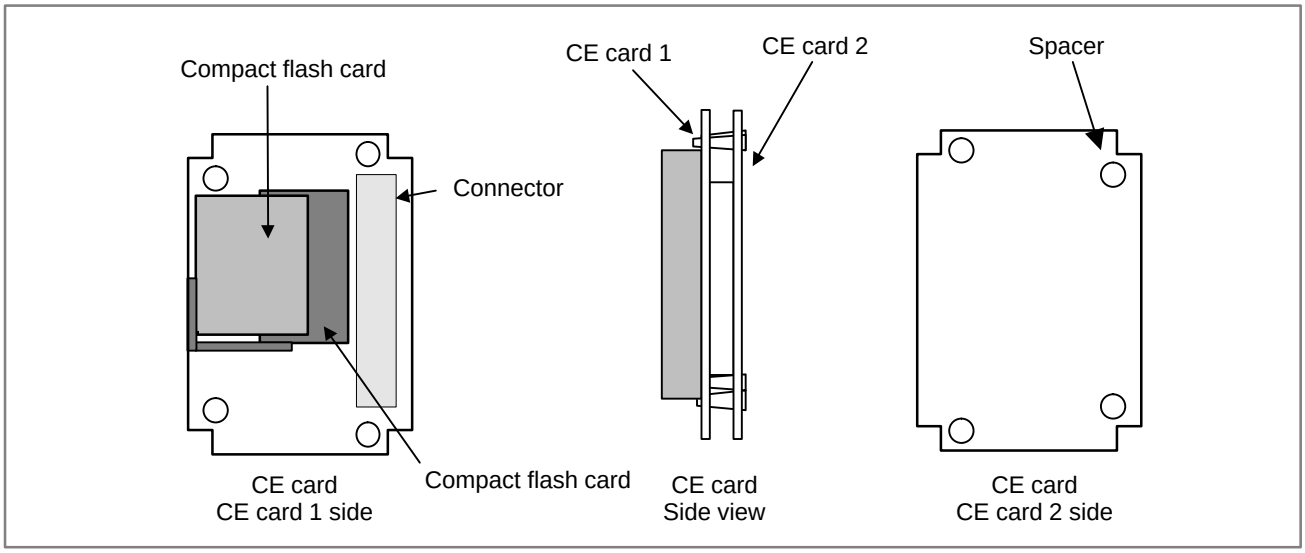

Item	Cord	Remarks
CE card 1	A20B–3300–0330	10.4" LCD
CE card 2	A20B–3300–0320	
Compact flash card	A87L–0001–0173#032MBA	32MB
	A87L–0001–0173#048MBA	48MB
	A87L–0001–0173#064MB	64MB
	A87L–0001–0173#096MB	96MB
Spacer	A98L–0005–0208	

3.6 INSTALLING AND REMOVING OPTIONAL BOARDS

3.6.1 Installing and Removing the Mother Board

WARNING

Only those personnel who were well trained for maintenance and safety can perform the replacement.
When removing the board with the cabinet open, be careful not to touch the part containing high–voltage circuits (⚠ indicated by the electric shock mark and covered with the electric shock prevention sheet). If you touch the part when the sheet comes off, you receive an electric shock.

CAUTION

Before starting replacement work, back up the contents (such as parameters and programs) of the SRAM memory of the CNC. Otherwise, the contents of the SRAM memory may be lost during replacement work.

(1) Loosen the four screws that retain the case, then remove the case. At this time, do not disconnect the cables for the fan and battery.

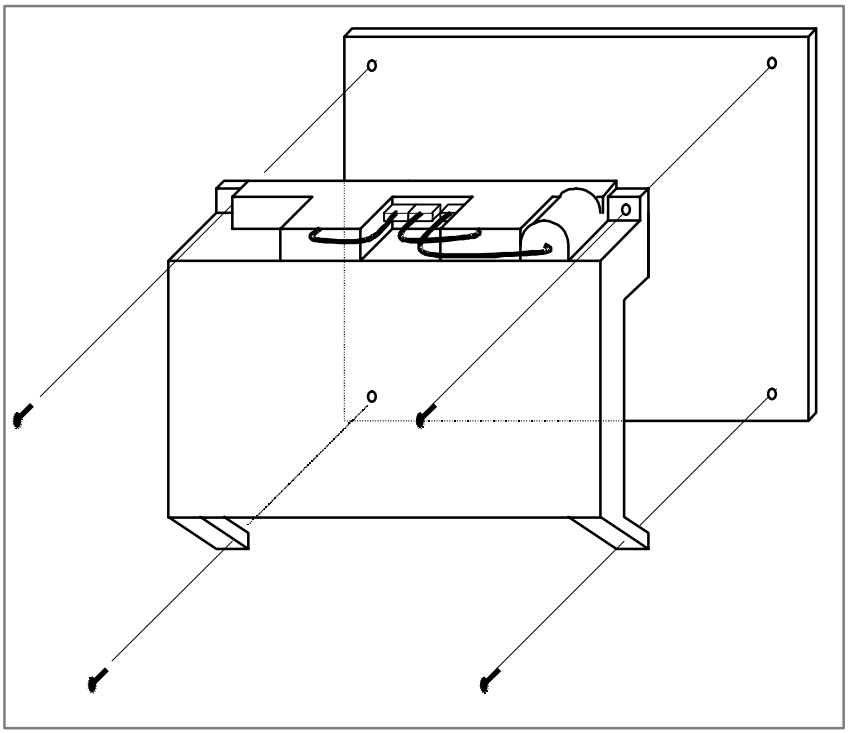

(2) Loosen the three screws that retain the power supply unit and remove the unit. Then disconnect the cables from PCMCIA2 (PCMCIA interface connector), CN8 (video signal interface connector), and CN2 (soft key connector) located on the mother board. When the touch panel is attached, also disconnect TP1 (touch panel connector). Remove the screws that retain the mother board. Since connector CN3 (inverter connection connector) directly engages the mother board and the inverter printed circuit board, remove the mother board while sliding it downward.

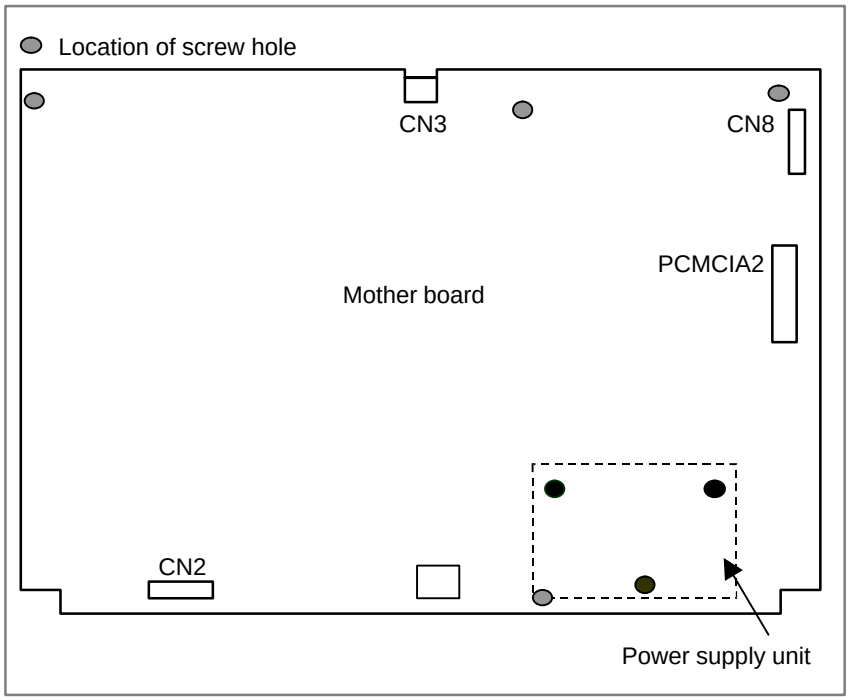

(3) To install the mother board, reverse steps (1) and (2).

3.6.2 Installing and Removing the CE Card

- **Removing the CE card**

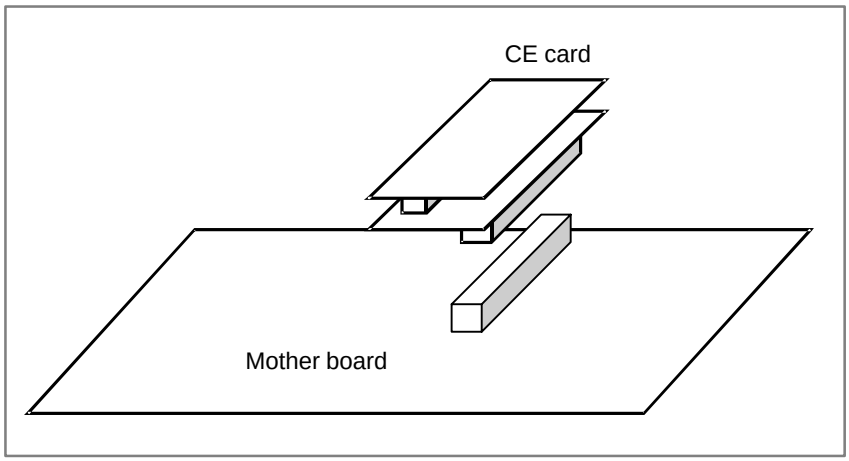

Remove the CE cards from the mother board. (Remove these cards from the plug connector on the mother board with CE card 1 and CE card 2 engaged.)

- **Removing the compact flash card**

- On side B (on which the plug connector for engaging the mother board is mounted), CE card 1 and the compact flash card are installed. Since the compact flash card is retained with a holding bracket, rotate the bracket upward to unlock it. Remove the bracket and rotate the latch to eject the compact flash card.

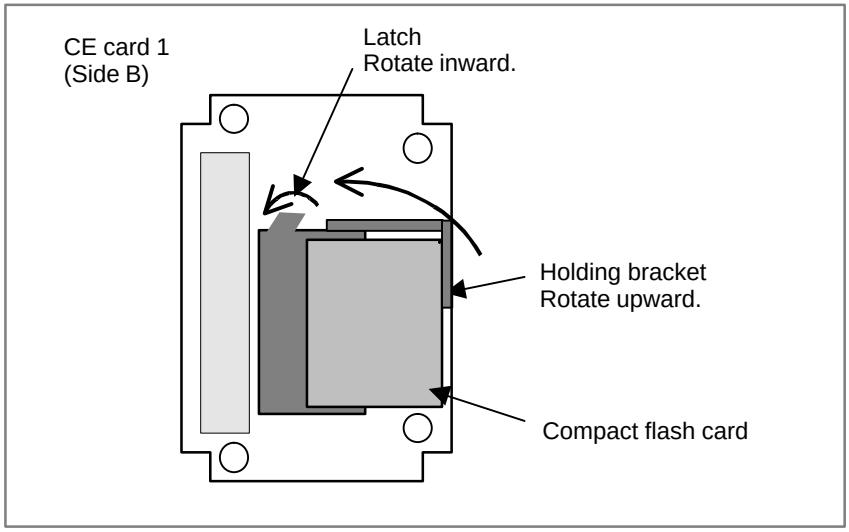

- **Separating CE card 1 from CE card 2**

- On side A, CE card 2 is installed. Press both sides of the latch section of each spacer engaging CE cards 1 and 2 to unlock the latch, then remove CE card 1.

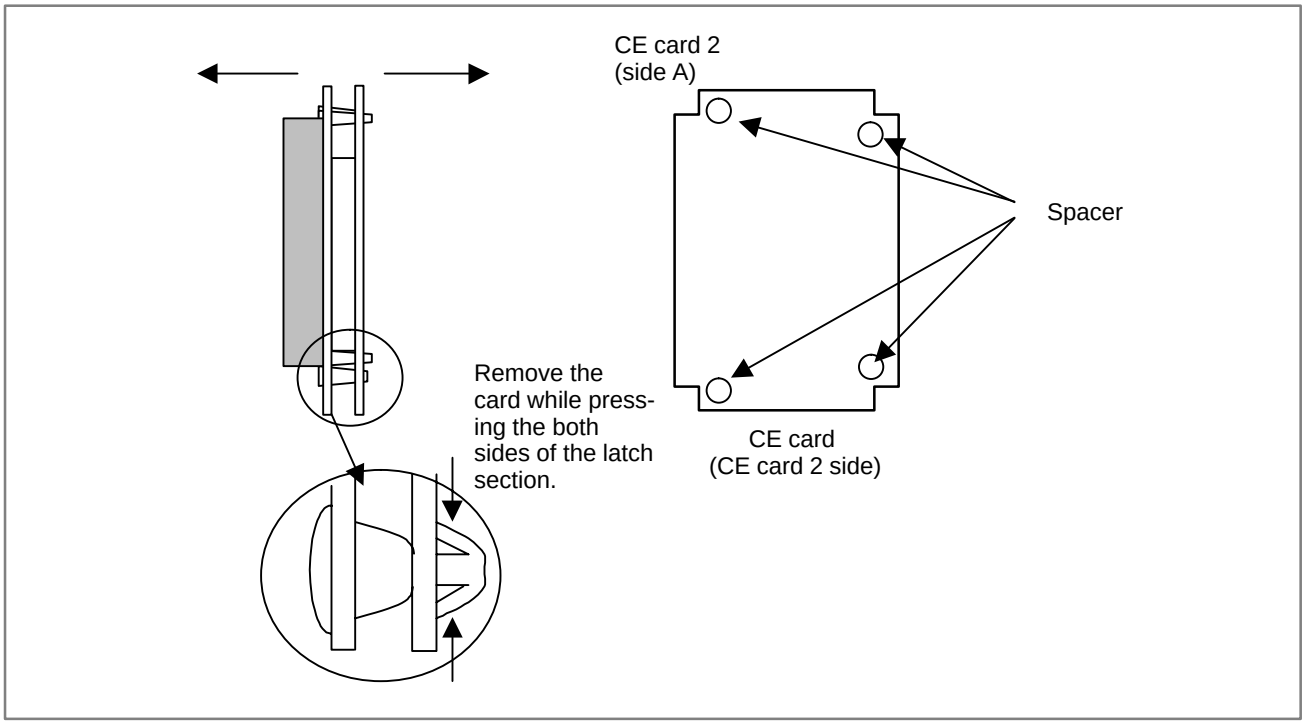

- **Removing spacers**

Pull out a spacer while pressing the both sides of the latch section.

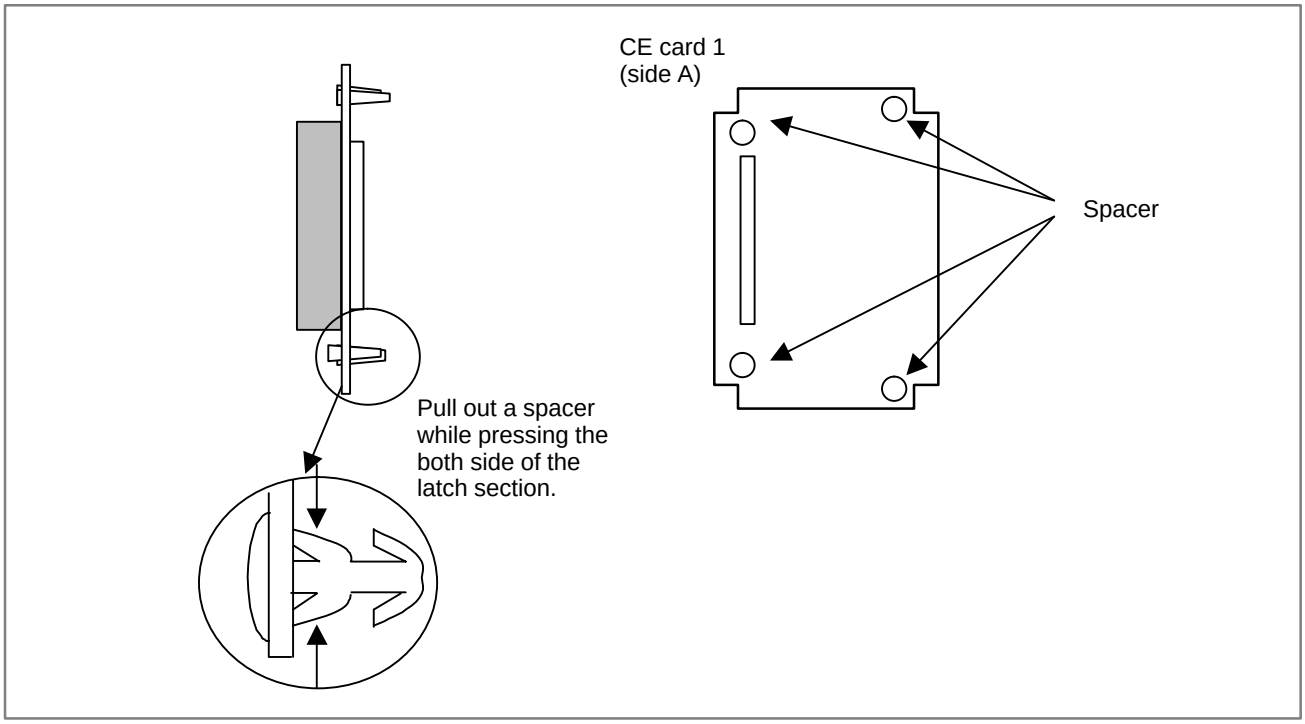

- **Attaching the spacers (spacer specification: A98L–0005–0208)**

On side B (on which the connector for combining the mother board is mounted), insert a spacer into a spacer hole.
Press the spacer until the latch on side A is completely open.

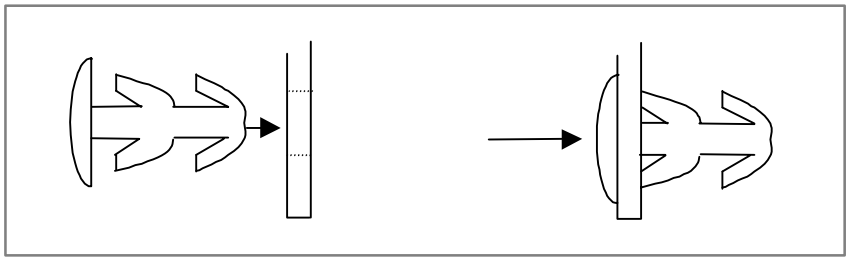

- **Installing other parts**

To install other parts, reverse the procedure for removing them.

3.7 LIST OF UNITS AND PRINTED CIRCUIT BOARDS

Printed circuit boards

Name		Drawing number
Motherboard	160*i*s	A20B–8100–0790
	180*i*s	A20B–8100–0791
	210*i*s (SA1)	A20B–8100–0794
	210*i*s (SB7)	A20B–8100–0795
CE card	CE card 1	A20B–3300–0330
	CE card 2	A20B–3300–0320
Power supply unit		A20B–8100–0720
Printed circuit board of Inverter		A20B–8001–0920
Printed circuit board of backup unit		A20B–2100–0820

Units

Name			Drawing number
LCD unit (10.4” LCD)	Soft keys	Touch panel	
	○	×	A02B–0281–D505
	×	○	A02B–0281–D506
	○	○	A02B–0281–D507
Case Unit	No slot		A02B–0281–C600
	2 slots		A02B–0281–C602
	3 slots		A02B–0281–C603
	4 slots		A02B–0281–C604
FA full–keyboard			A02B–0281–C130#E

Others

Name		Drawing number
Compact flash card	32MB	A87L–0001–0173#32MBA
	48MB	A87L–0001–0173#48MBA
	64MB	A87L–0001–0173#64MB
	96MB	A87L–0001–0173#96MB
Cable for backup unit		A02B–0281–K801
Cable for FA full–keyboard		A02B–0281–K802

3.8 REPLACING THE FUSE ON THE UNITS

WARNING

Before replacing the fuse, eliminate the cause by which the fuse blew.
Therefore, only those personnel who were well trained for maintenance and safety can perform the replacement.
When replacing the fuse with the cabinet open, be careful not to touch the part containing high–voltage circuits (⚠ indicated by the electric shock mark and covered with the electric shock prevention sheet). If you touch the part when the sheet comes off, you receive an electric shock.

- **Ordering number of fuse** A02B–0236–K101
- **Location of Fuse**

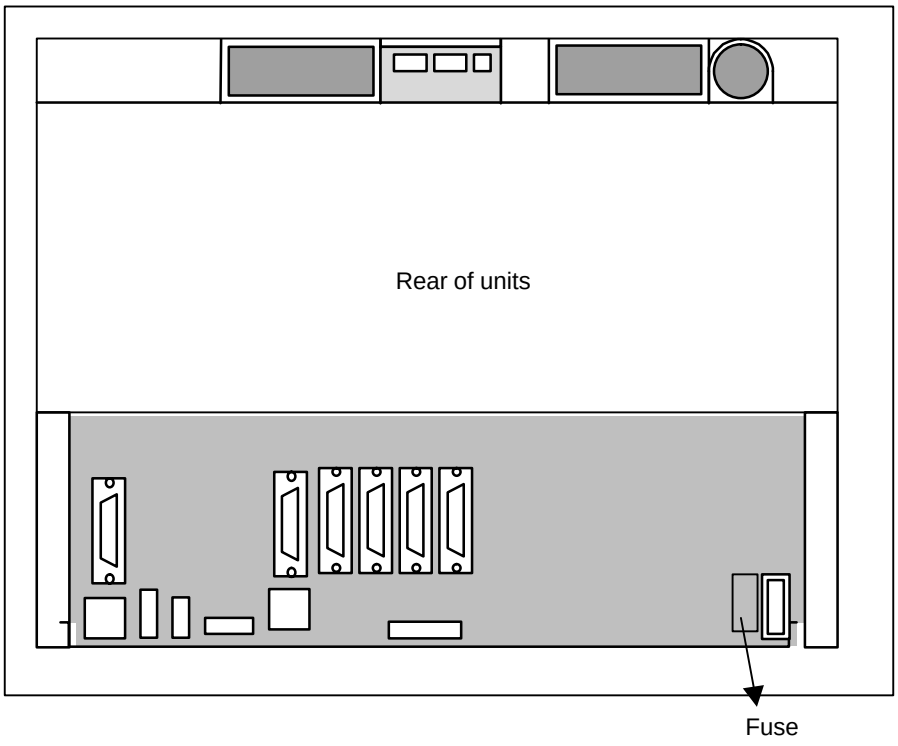

3.9 REPLACING THE BATTERY

See Section 2.8, ”REPLACING THE BATTERY” for replacing the battery.

3.10 REPLACING THE FAN MOTOR

- **Ordering number of fan motor**

Unit	Number of extension slot	Ordering number	Required number
LCD–mounted type CNC	No extension slot	A02B–0236–K120	2
	Extension slot 2	A02B–0236–K121	2
	Extension slot 3	A02B–0236–K121	2
		A02B–0236–K122	2
	Extension slot 4	A02B–0236–K121	4

- **Replacing method**

See Section 2.9, ”REPLACING A FAN UNIT” for replacing the fan motor.

3.11 REPLACING THE LCD BACK–LIGHT

LCD back–light can not be replaced for LCD–mounted type *i*s series CNC.

3.12 REPLACING THE TOUCH PANEL PROTECTION SHEET

For the LCD display unit with a touch panel, the surface of the touch panel is covered with the protection sheet to protect it. When there are flaws and contamination on this protection sheet that make the screen hard to read, replace the protection sheet. Prepare the following items.

Item		Ordering number
Touch panel protection sheet	10.4” LCD (with touch panel and soft keys)	A02B–0236–K110
	10.4” LCD (with touch panel)	A02B–0236–K130

- **Replacing method**

See Section 5.4.

3.13 BACKUP UNIT

- **Specifications**

Item	Ordering number
Backup unit PCB	A20B–2100–0820
Backup unit cable	A02B–0281–K801

- **Mounting positions of connectors**

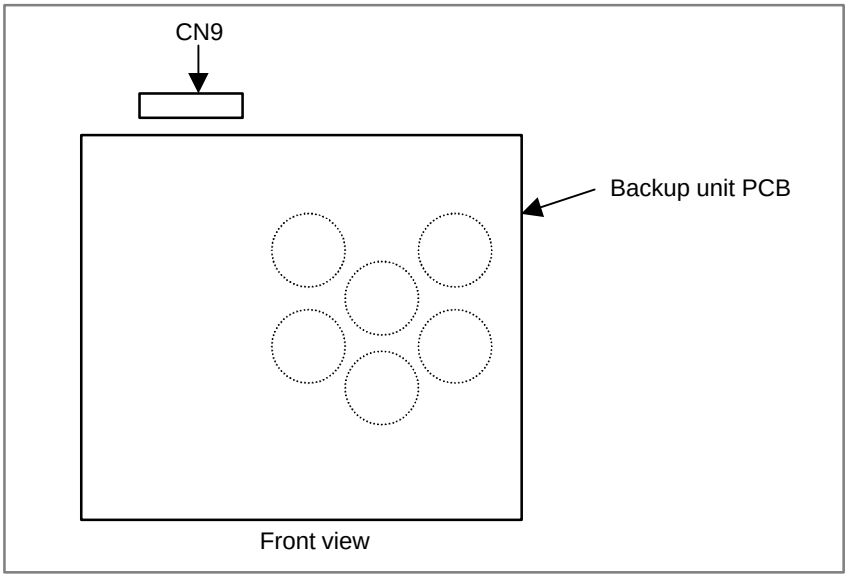

Connector name	Function
CN9	Supplying the backup power (main printed circuit board interface)

When the LED (PC POWER) on the main printed circuit board lights, do not touch any parts in the basic unit and backup unit. The FS160*i*s/FS180*i*s/FS210*i*s operates for about 12 seconds after the main power is turned off.

4 STAND–ALONE TYPE *i* SERIES HARDWARE

This chapter describes the printed circuit boards of the CNC control unit of the stand–alone type *i* series and card PCB functions on the printed circuit boards. The chapter also describes procedures for replacing consumable items.

4.1 HARDWARE CONFIGURATION 270
4.2 HARDWARE OVERVIEW 271
4.3 TOTAL CONNECTION DIAGRAMS 275
4.4 CONNECTOR AND CARD CONFIGURATIONS OF PRINTED CIRCUIT BOARDS 280
4.5 UNITS AND PRINTED CIRCUIT BOARDS 324
4.6 MOUNTING AND REMOVING AN OPTION BOARD 335
4.7 MOUNTING AND REMOVING THE BACK PANEL 340
4.8 REPLACING THE FUSE OF THE CONTROL UNIT 342
4.9 REPLACING THE BATTERY 343
4.10 REPLACING A FAN UNIT 347
4.11 REPLACING THE FUSE OF THE LCD UNIT 348
4.12 REPLACING THE LCD BACKLIGHT 349
4.13 HEAT GENERATION OF THE UNITS 351

4.1 HARDWARE CONFIGURATION

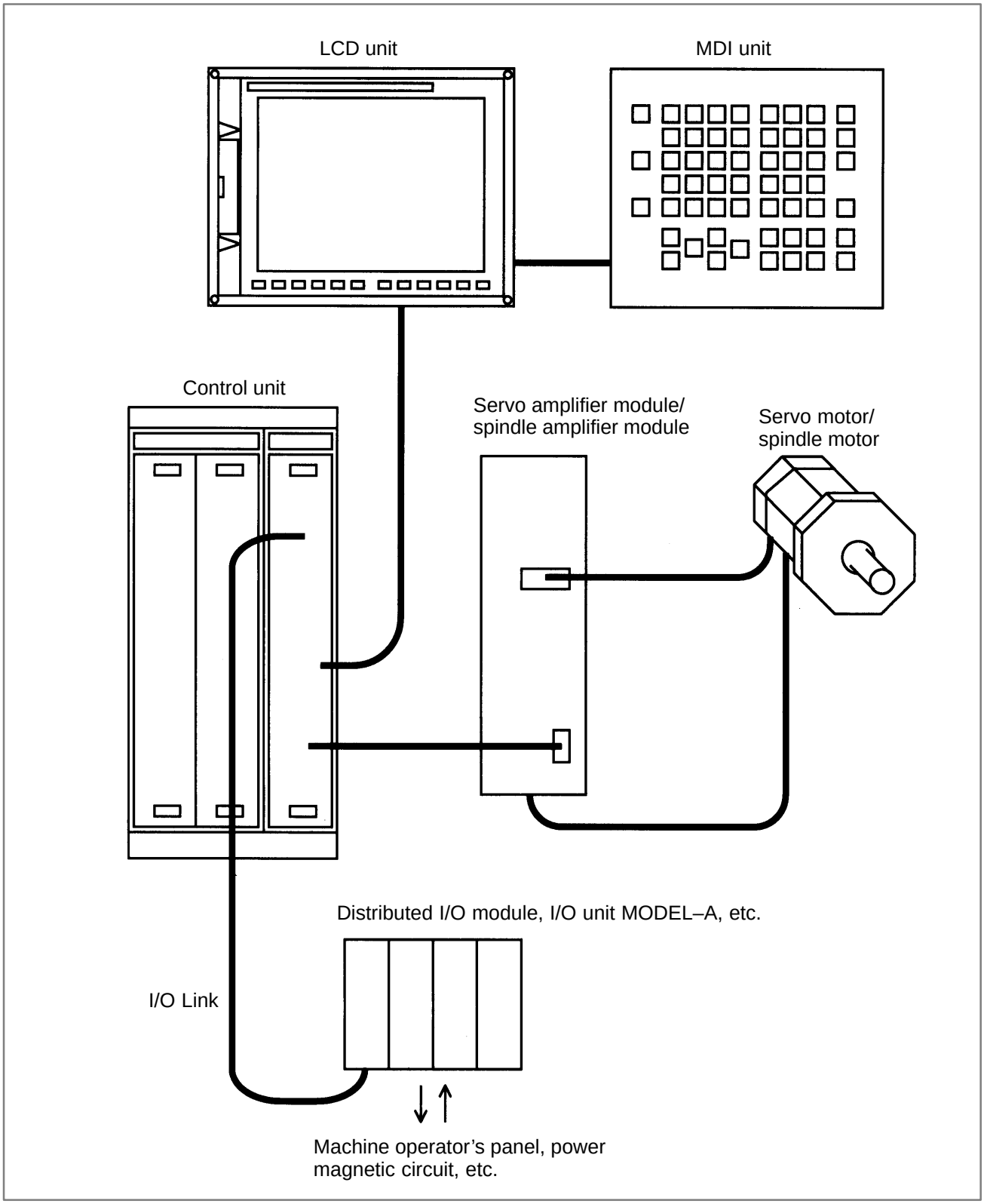

4.2 HARDWARE OVERVIEW

4.2.1 Series 16*i*/160*i*/160*i*s

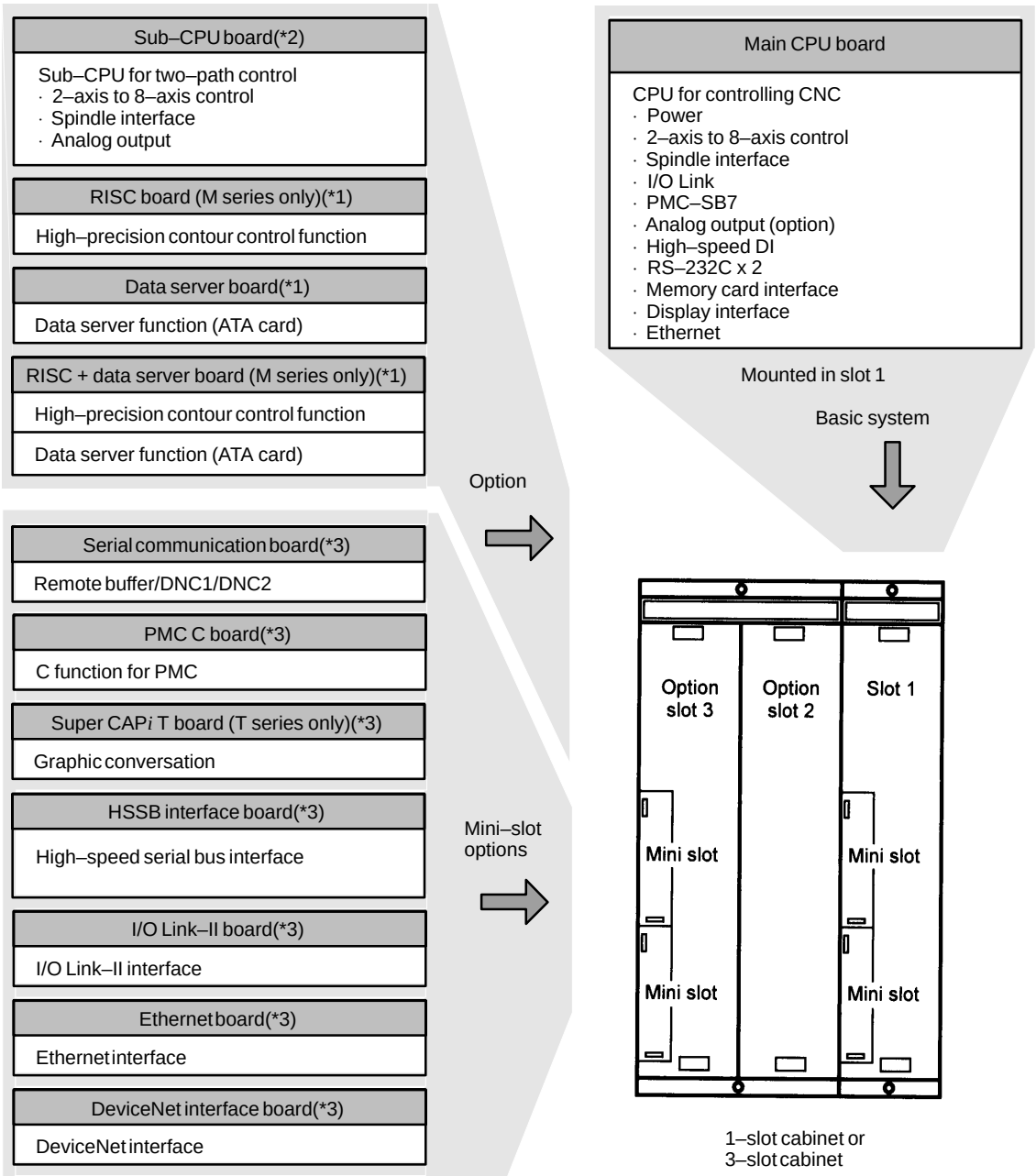

The mounting position of an option board depends on the board type, as shown below:
The option board marked with *1 fits into option slot 2.
The option board marked with *2 fits into option slot 3.
The option board marked with *3 fits into a mini slot (of any slot).

4.2.2
Series 18*i*/180*i*/180*i*s

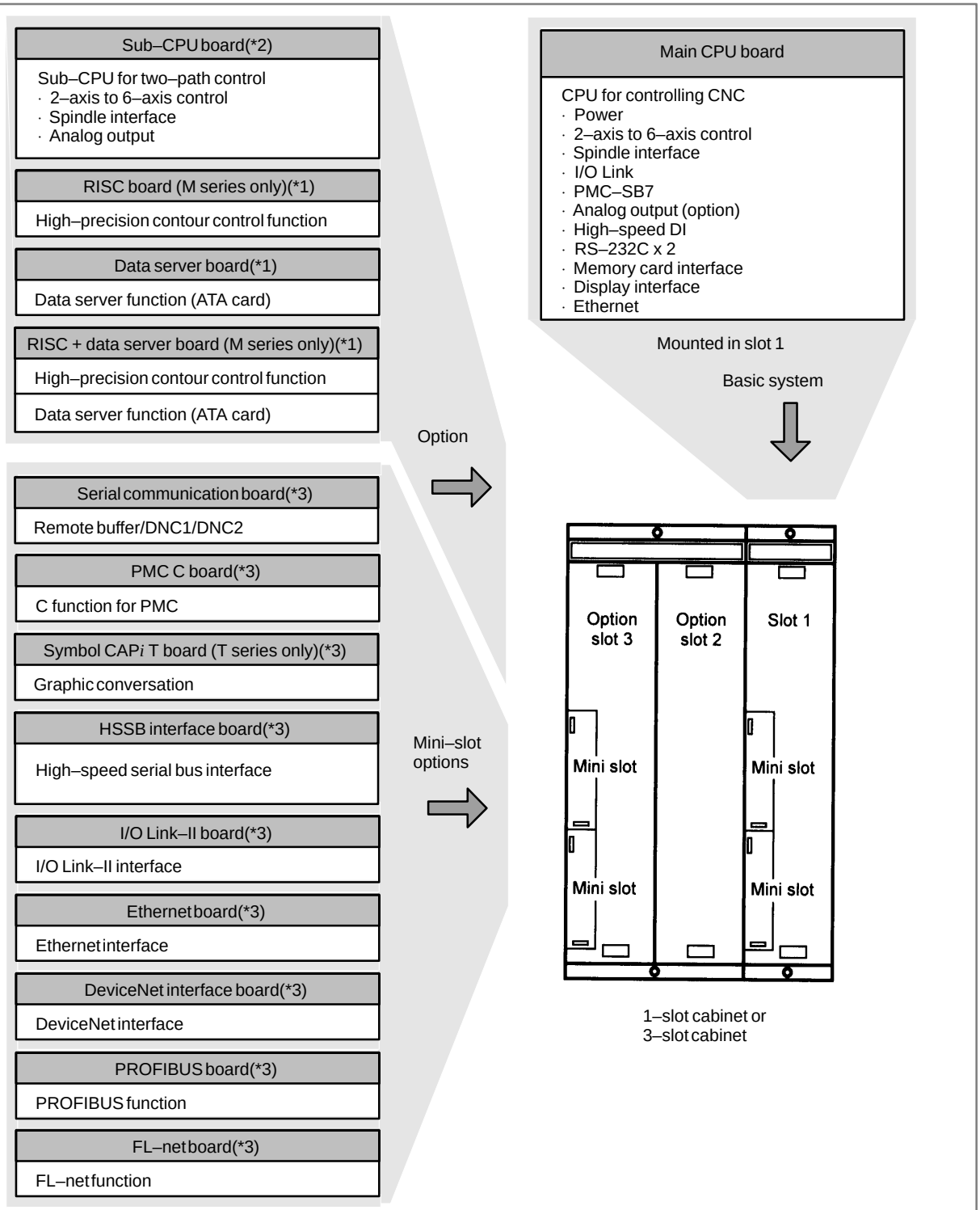

The mounting position of an option board depends on the board type, as shown below:
The option board marked with *1 fits into option slot 2.
The option board marked with *2 fits into option slot 3.
The option board marked with *3 fits into a mini slot (of any slot).

4.2.3
Series 21*i*/210*i*/210*i*s

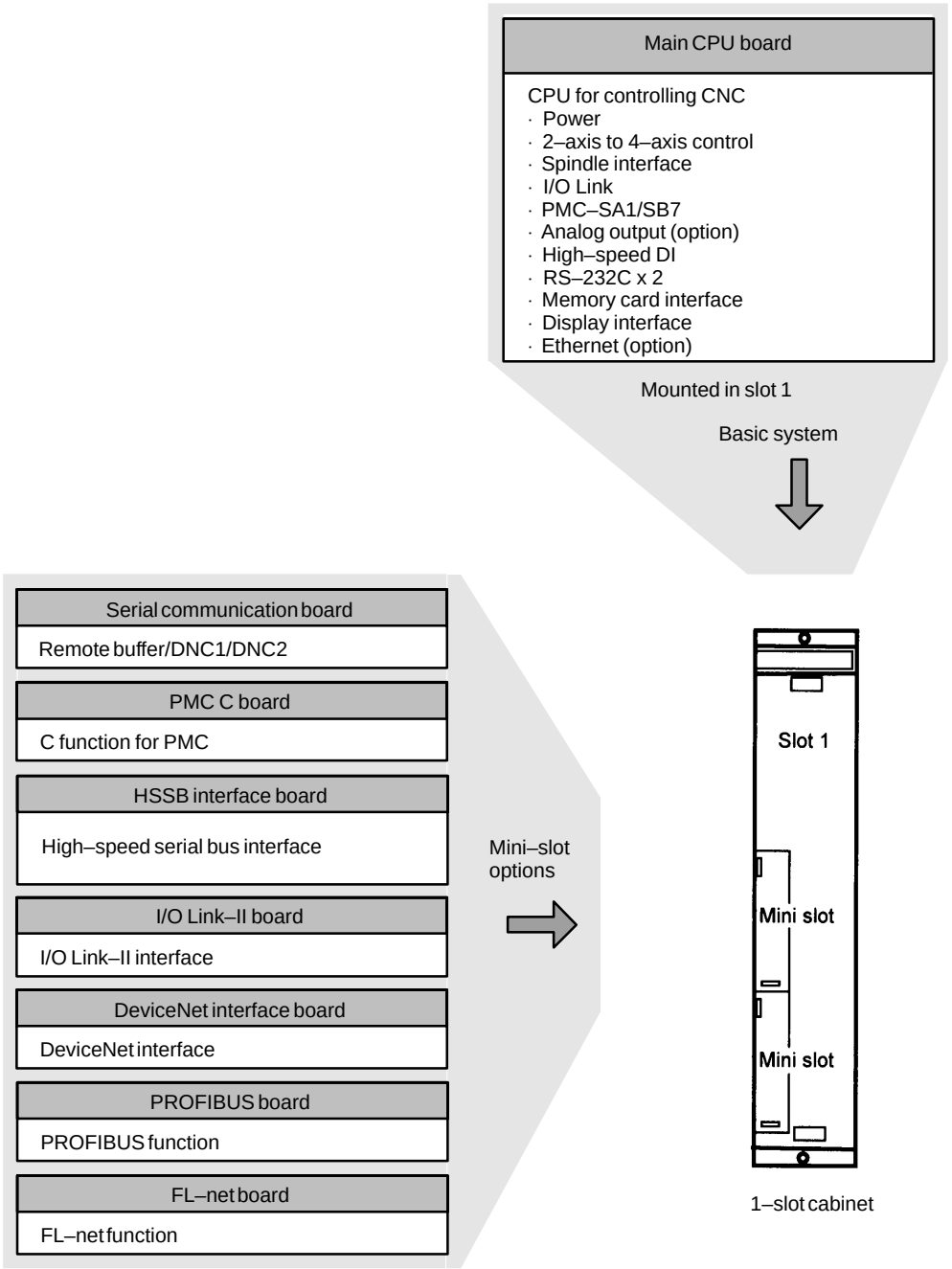

These option boards are mounted in mini slots (of any slot).

4.3 TOTAL CONNECTION DIAGRAMS

Stand–alone type control unit

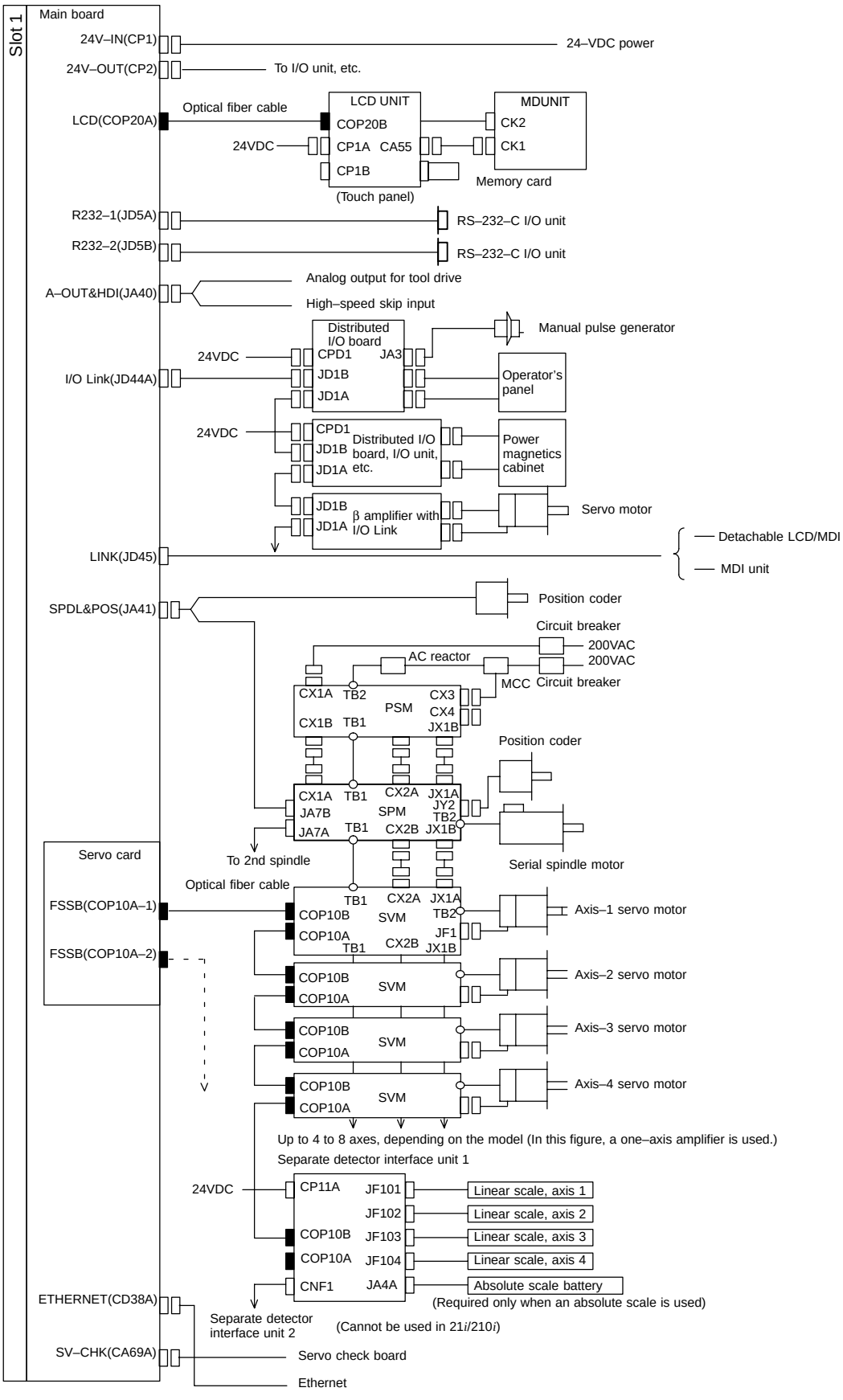

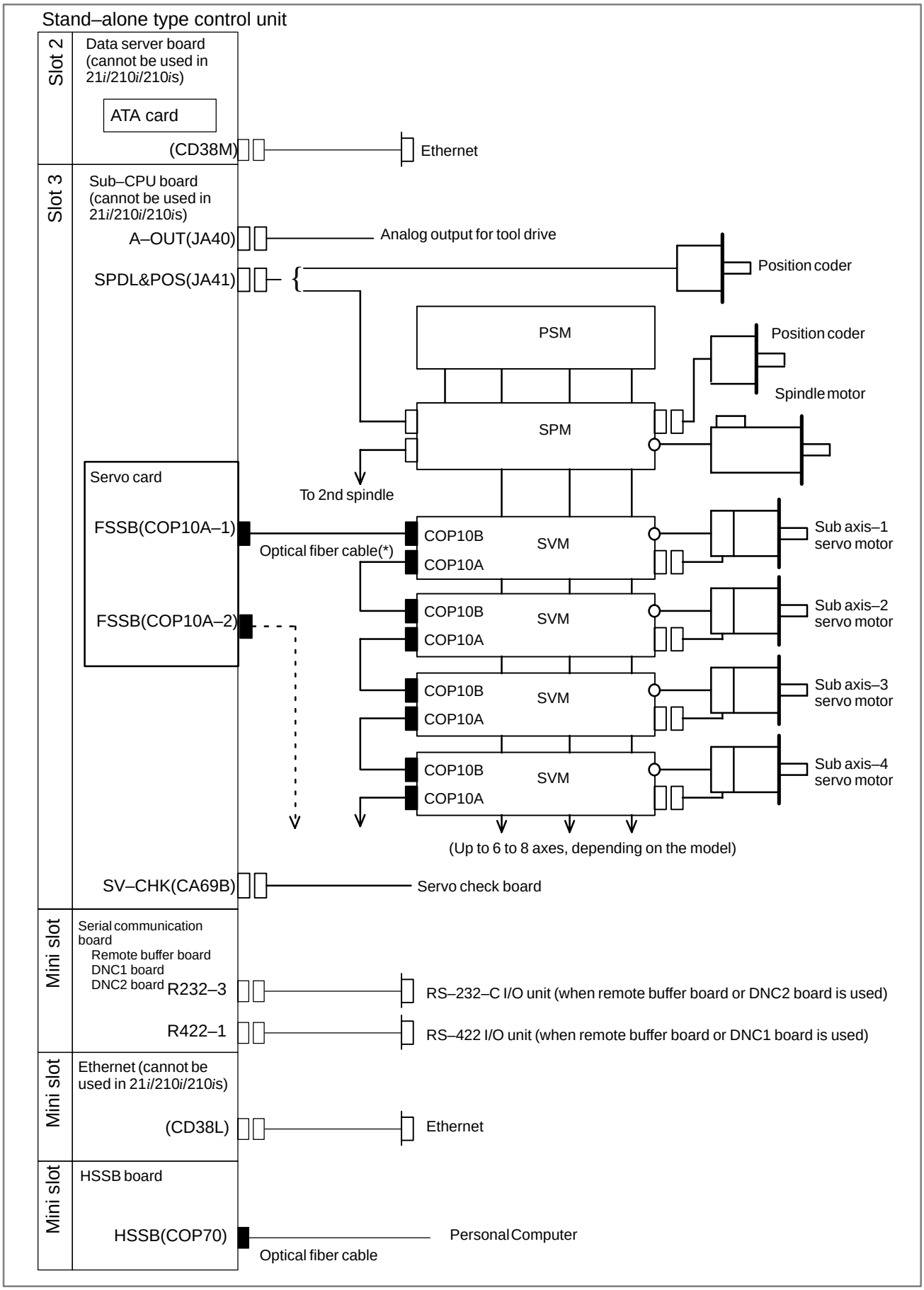
Stand–alone type control unit
Slot 2
Data server board
(cannot be used in
21*i*/210*i*/210*i*s)
ATA card
(CD38M)
Ethernet
Slot 3
Sub–CPU board
(cannot be used in
21*i*/210*i*/210*i*s)
A–OUT(JA40)
Analog output for tool drive
SPDL&POS(JA41)
Position coder
PSM
Position coder
Spindle motor
SPM
To 2nd spindle
Servo card
FSSB(COP10A–1)
Optical fiber cable(*)
COP10B
COP10A
SVM
Sub axis–1
servo motor
FSSB(COP10A–2)
Sub axis–2
servo motor
Sub axis–3
servo motor
Sub axis–4
servo motor
(Up to 6 to 8 axes, depending on the model)
SV–CHK(CA69B)
Servo check board
Mini slot
Serial communication
board
Remote buffer board
DNC1 board
DNC2 board
R232–3
RS–232–C I/O unit (when remote buffer board or DNC2 board is used)
R422–1
RS–422 I/O unit (when remote buffer board or DNC1 board is used)
Mini slot
Ethernet (cannot be
used in 21*i*/210*i*/210*i*s)
(CD38L)
Ethernet
Mini slot
HSSB board
HSSB(COP70)
Personal Computer
Optical fiber cable

When an option board is used

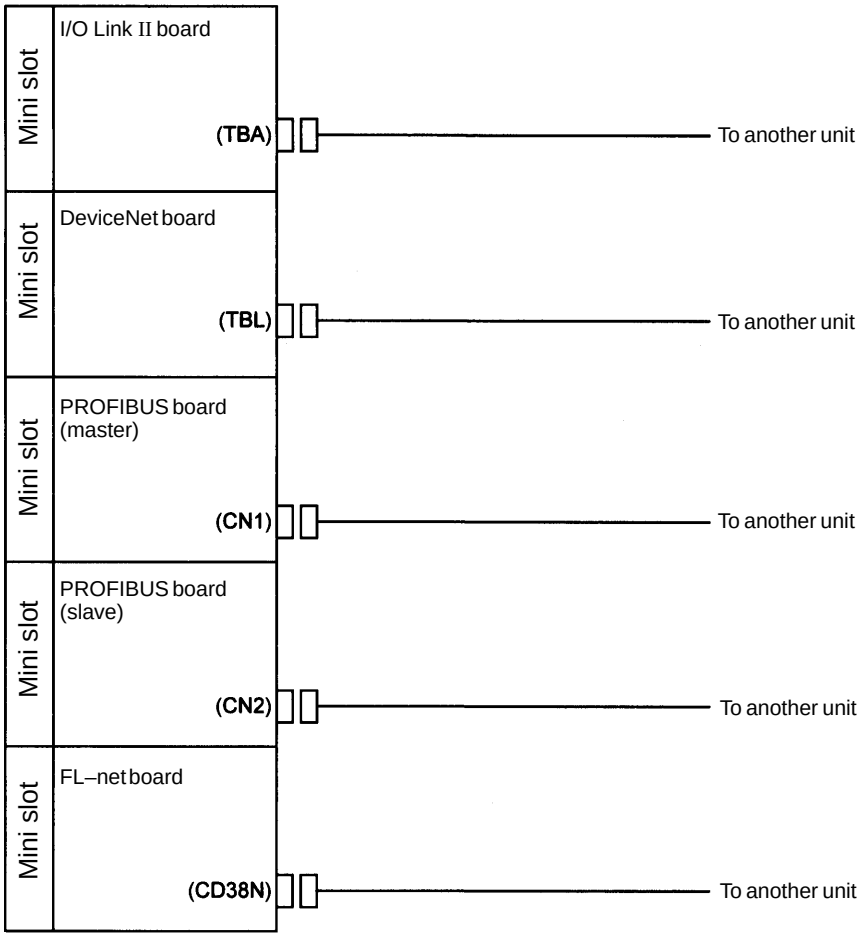

For the *i*s series CNC display unit, the additional connection shown below is required on the unit.

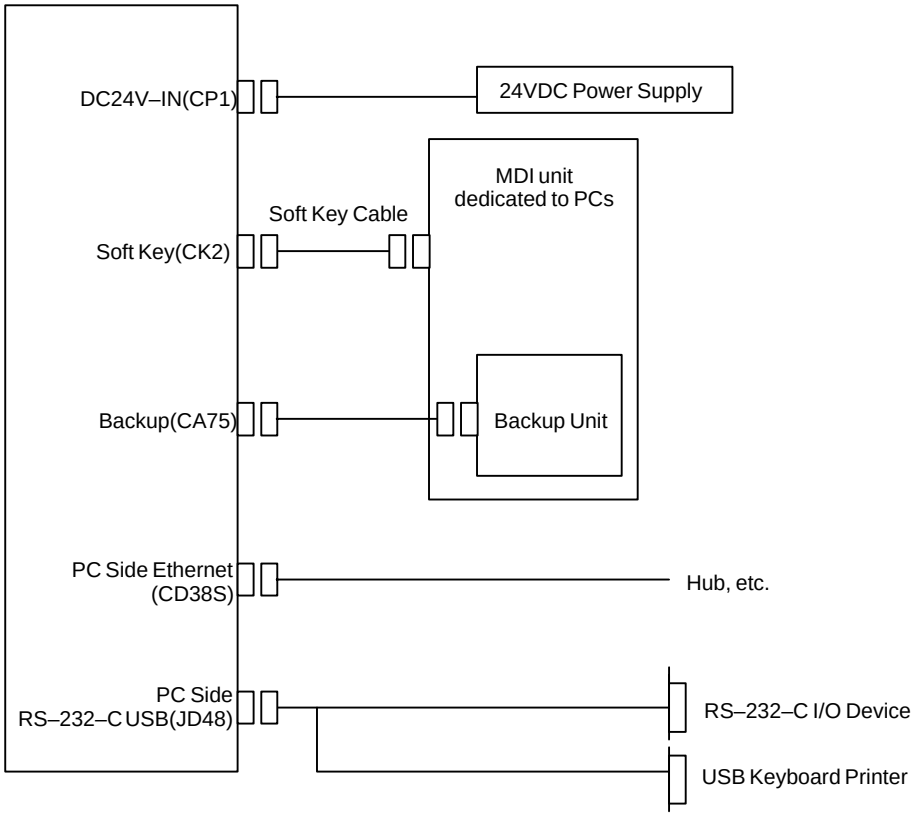

4.4 CONNECTOR AND CARD CONFIGURATIONS OF PRINTED CIRCUIT BOARDS

4.4.1 Main CPU Board of Series 16*i*/18*i*/21*i*/160*i*/ 180*i*/210*i*/160*is*/180*is*/ 210*is*

- **Specifications**

Item	Code
Main CPU board of Series 16*i*/160*i*/160*is*	A16B–3200–0420
Main CPU board of Series 18*i*/180*i*/180*is*	A16B–3200–0421
Main CPU board of Series 21*i*/210*i*/210*is*	A16B–3200–0425

- **Mounting positions of connectors, LEDs, etc.**

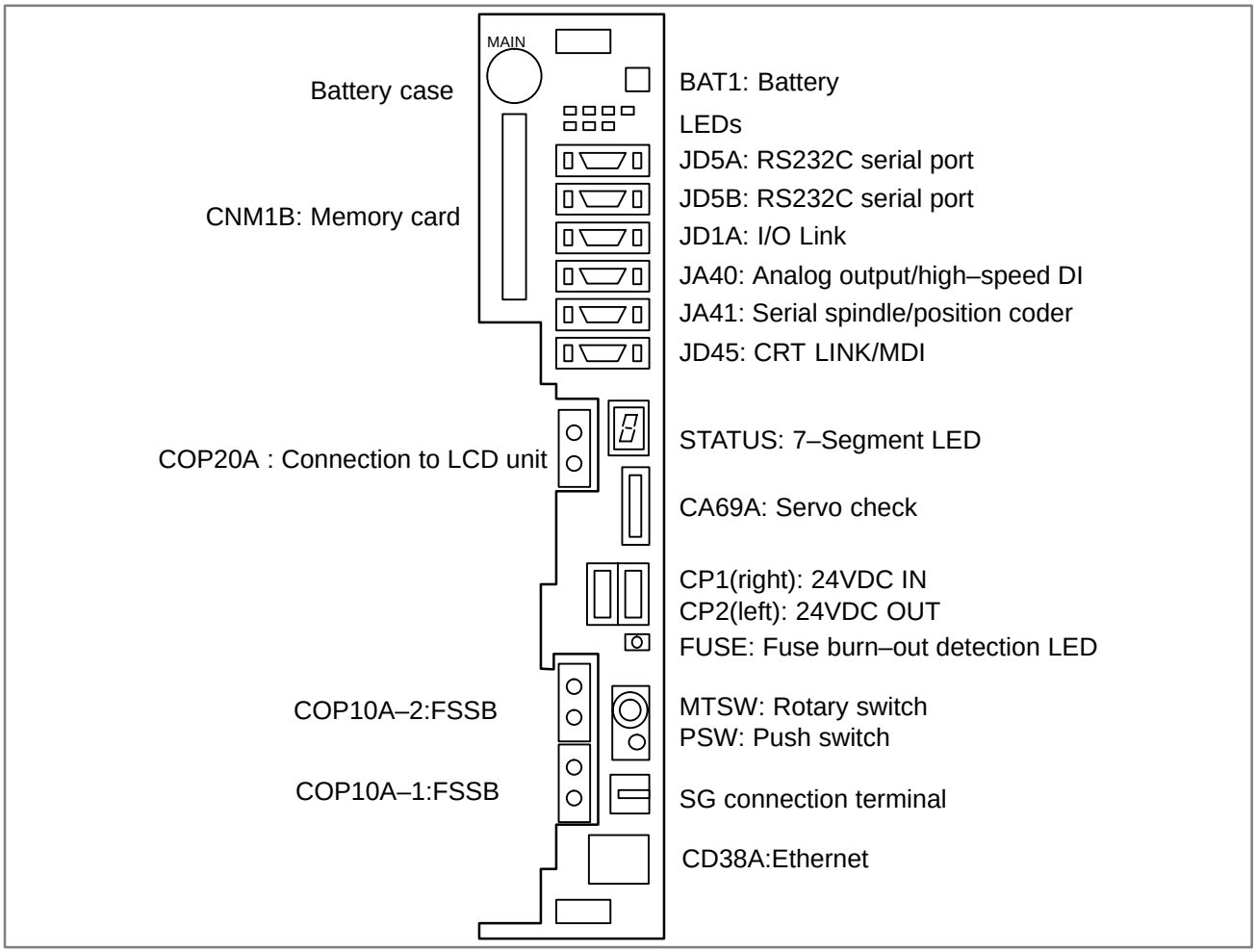

STATUS 7–segment LED: Used for setting and maintenance operations, in combination with the MTSW rotary switch and PSW push switch described below.

MTSW rotary switch: This rotary switch is used for setting and maintenance operations, in combination with the STATUS 7–segment LED and the PSW push switch.

PSW push switch: This push switch is used for setting and maintenance operations, in combination with the STATUS 7–segment LED and the MTSW rotary switch.

- **Mounting positions of cards and DIMM modules**

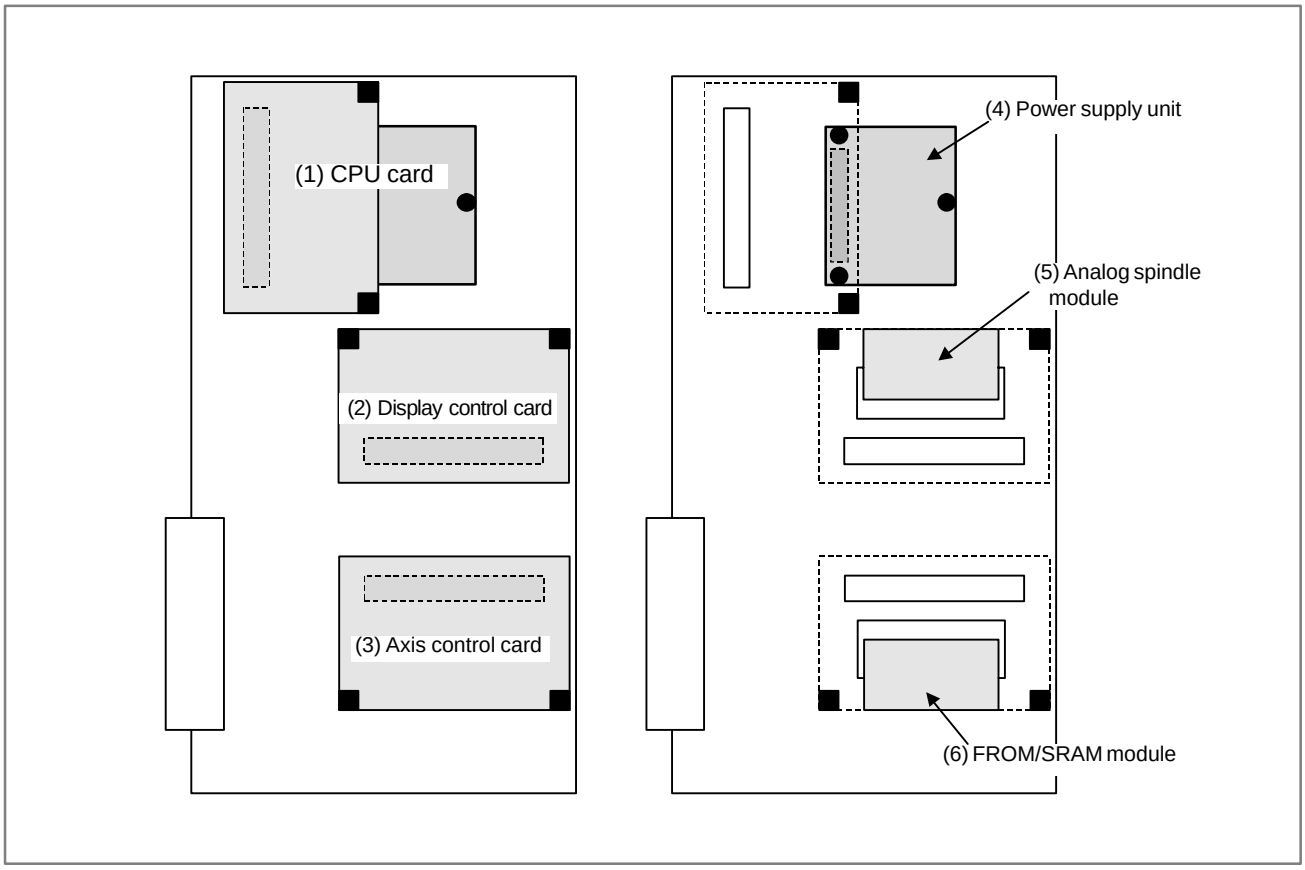

No.	Item	Code	Function	Remarks
(1)	CPU card	A20B–3300–0310	DRAM 16MB For Series 16*i*/18*i*/160*i*/180*i*/160*i*s/180*i*s	
		A20B–3300–0311	DRAM 32MB For Series 16*i*/18*i*/160*i*/180*i*/160*i*s/180*i*s	
		A20B–3300–0291	DRAM 16MB For Series 21*i*/210*i*/210*i*s	
		A20B–3300–0290	DRAM 32MB For Series 21*i*/210*i*/210*i*s	
		A20B–3300–0312	DRAM 16MB For Series 21*i*/210*i*/210*i*s	When the embedded Ethernet is used with Series 21*i*/210*i*/210*i*s
		A20B–3300–0313	DRAM 32MB For Series 21*i*/210*i*/210*i*s	
(2)	Display control card	A20B–3300–0340	LCD/MDI Embedded ethernet	
		A20B–3300–0360	Display link Embedded ethernet	
		A20B–3300–0362	MDI Embedded ethernet	
		A20B–3300–0364	Without display unit Embedded ethernet	
		A20B–3300–0341	LCD/MDI	When the embedded Ethernet is not used with Series 21*i*/210*i*/210*i*s
		A20B–3300–0361	Display link	
		A20B–3300–0363	MDI	
(3)	Axis control card	A20B–3300–0033	Axis control 2–axes	Servo software Series 9090 (21*i*)
		A20B–3300–0032	Axis control 4–axes	
		A20B–3300–0243	Axis control 2–axes	Servo software Series 90B0
		A20B–3300–0242	Axis control 4–axes	
		A20B–3300–0241	Axis control 6–axes	
		A20B–3300–0240	Axis control 8–axes	
		A20B–3300–0248	Axis control 4–axes	Servo software Series 90B0 (High–speed HRV)
		A20B–3300–0245	Axis control 6–axes	
		A20B–3300–0244	Axis control 8–axes	
		A20B–3300–0246	Learning controlled axis control	Servo software Series 90B3/90B7
		A20B–3300–0247	Learning controlled axis control	Servo software Series 90B3/90B7 (High–speed HRV)

No.	Item	Code	Function	Remarks
(4)	Power unit	A20B–8100–0851		
(5)	Analog spindle module	A20B–3900–0170	Analog spindle position coder	
(6)	FROM/SRAM module	A20B–3900–0160	FROM 16MB SRAM 1MB	FROM stores various control software products. SRAM is backed up by a battery.
		A20B–3900–0161	FROM 16MB SRAM 2MB	
		A20B–3900–0162	FROM 16MB SRAM 3MB	
		A20B–3900–0163	FROM 32MB SRAM 1MB	
		A20B–3900–0164	FROM 32MB SRAM 2MB	
		A20B–3900–0165	FROM 32MB SRAM 3MB	
		A20B–3900–0180	FROM 16MB SRAM 256kB	
		A20B–3900–0181	FROM 16MB SRAM 512kB	
		A20B–3900–0182	FROM 32MB SRAM 256kB	
		A20B–3900–0183	FROM 32MB SRAM 512kB	

● LED display

- Fuse burn–out detection LED

FUSE (Red)	Lit if the fuse is blown.

- LED status transition at power–up □: Off ■: On

7–segment LED	STATUS	Status
Not lit	□□□□	Power off
8	■■■■	CPU not activated after power–up
F		NC system loading started by boot system
9	□■■■	NC system started–up and RAM initialization completed
8	■□■■	Waiting for system processor ID setting
7	□□■■	System processor ID setting completed Display circuit initialization completed
6	■■□■	FANUC bus initialization completed
5	□■□■	Loading from flash memory completed PMC initialization completed Series and edition screen displayed
4	■□□■	Hardware configuration information setting completed for each printed circuit board of the system
3	□□□■	PMC ladder initialization completed
2	□■■□	Waiting for digital servo and spindle initialization
1	■■■□	Digital servo and spindle initialization completed
0	■□□□	Initialization completed, normal operation state

- LED display during automatic operation start–up
  While automatic operation start–up in progress signal STL (F0.5) is held to 1, the 7–segment LED cyclically displays the following patterns:

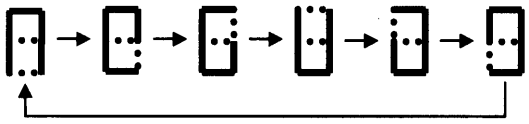

- LED display when a battery alarm occurs

ALARM ■□□	SRAM backup battery is weak.

- LED display when a system alarm occurs □: Off ■: On ☆: Blink
  (if CPU card A20B–3300–031X is used)

ALARM □■□	System failure. The software detected an error and stopped the system.
ALARM ■■□	An error occurred on the local bus in the main CPU board.
ALARM □□■	System emergency. The hardware detected an error.
ALARM ■☆■	A disconnection was found in the optical fiber cable between the CNC and LCD. Alternatively, a printed circuit board on the LCD side is defective. If a disconnection occurs, the dot of the 7–segment LED is also lit. If a disconnection occurs, the display of the LCD unit blinks.
ALARM □■■	An SRAM parity error or SRAM ECC error was detected.
ALARM ■■■	A DRAM parity was detected.
ALARM ☆☆☆	A bus error occurred in the main CPU.

(If CPU card A20B–3300–029X is used)

ALARM □■□	System failure. The software detected an error and stopped the system.
ALARM ■■□	An error occurred on the local bus in the main CPU board. Alternatively, a bus error occurred in the main CPU. Alternatively, a DRAM parity error was detected.
ALARM □□■	System emergency. The hardware detected an error. Alternatively, a bus error occurred in the main CPU. Alternatively, a DRAM parity error was detected.
ALARM ■□■	A disconnection was found in the optical fiber cable between the CNC and LCD. Alternatively, a printed circuit board on the LCD side is defective. If a disconnection occurs, the dot of the 7–segment LED is also lit. If a disconnection occurs, the display of the LCD unit blinks.
ALARM □■■	An SRAM parity error or SRAM ECC error was detected.

NOTE
1 If any of the system alarms occurs, the hardware may be defective.
2 If a disconnection is detected in the optical fiber cable between CNC and LCD at power–up, the ALARM LEDs alternately display these patterns: ■□■ → □■□

- 7–segment LED display when a system alarm occurs
  If a system alarm occurs, a number blinks as shown below, depending on the system alarm number.

7–segment LED	System alarm number	System alarm type
0	900 to 909	ROM parity alarm. System ROM parity stored in FROM
1	910 to 919	SRAM or DRAM parity alarm
2	920 to 929	Servo alarm
3	930 to 949	CPU interrupt or SRAM ECC error
5	950 to 959	PMC system alarm
7	970 to 979	Bus error or non–maskable interrupt
8	Others	Other system alarms

NOTE
If any of the system alarms occurs, the hardware may be defective.

- **Block diagram**

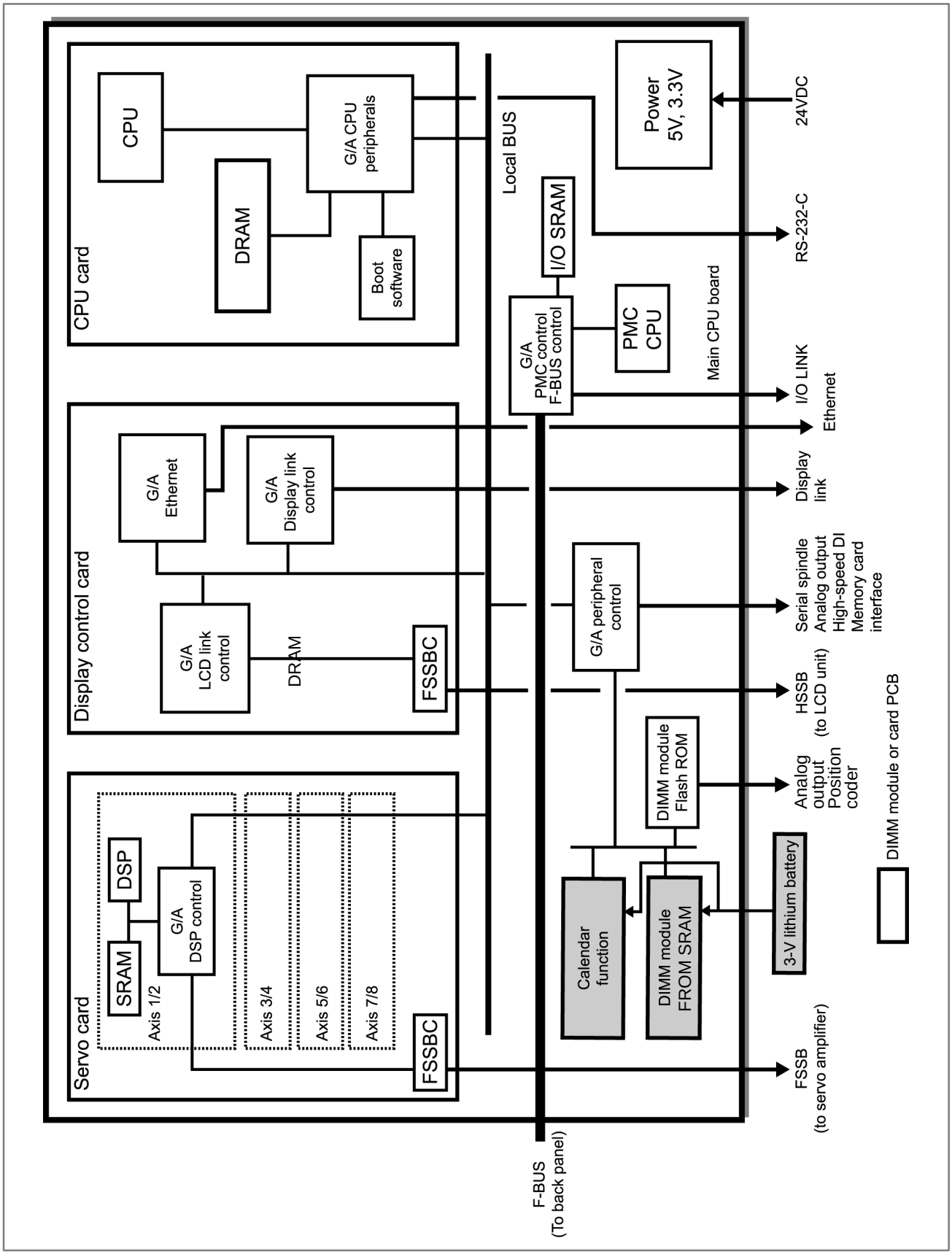

4.4.2 Sub–CPU Board

- **Specifications**

Item	Code
Sub–CPU board	A16B–2203–0751

- **Mounting positions of connectors, LEDs, etc.**

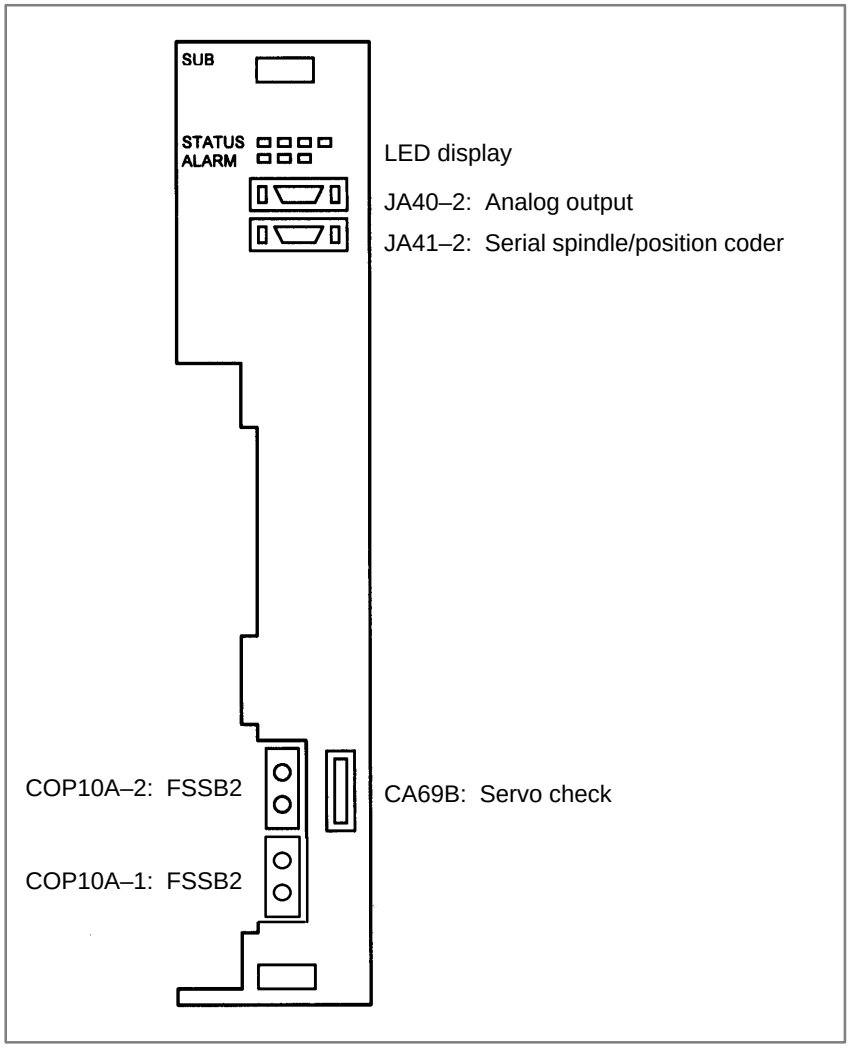

- **Mounting positions of cards and DIMM module**

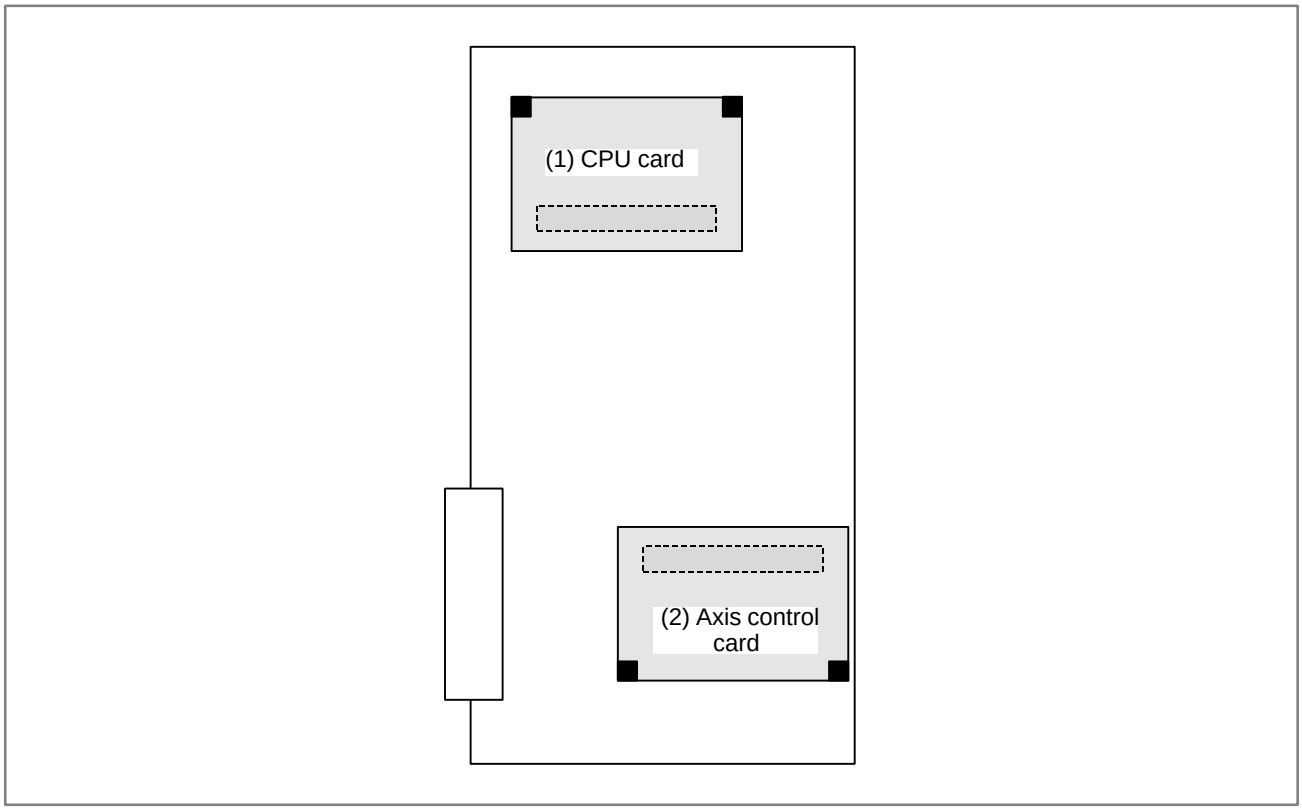

No.	Item	Code	Function	Remarks
(1)	CPU card	A20B–3300–0310		DRAM 16MB
		A20B–3300–0311		DRAM 32MB
(2)	Axis control card	A20B–3300–0243	Axis control 2 axes	Servo software Series 90B0
		A20B–3300–0242	Axis control 4 axes	
		A20B–3300–0241	Axis control 6 axes	
		A20B–3300–0240	Axis control 8 axes	
		A20B–3300–0248	Axis control 4 axes	Servo software Series 90B0 (High–speed HRV)
		A20B–3300–0245	Axis control 6 axes	
		A20B–3300–0244	Axis control 8 axes	
		A20B–3300–0246	Learning controlled axis control	Servo software Series 90B3/90B7
		A20B–3300–0247	Learning controlled axis control	Servo software Series 90B3/90B7 (High–speed HRV)

● LED display

● LED display at power–up □: Off ■: On

STATUS □□□□	Power off
STATUS ■■■□	CPU not activated after power–up
STATUS ■□□□	Initialization completed, normal operation in progress

● LED display when a system alarm occurs □: Off ■: On ☆: Blink

ALARM □■□	Servo alarm
ALARM ■□□	A DRAM parity error was detected.
ALARM ☆□□	A bus error occurred in a sub–CPU.

NOTE
If any of the system alarms occurs, the hardware may be defective.

- **Block diagram**

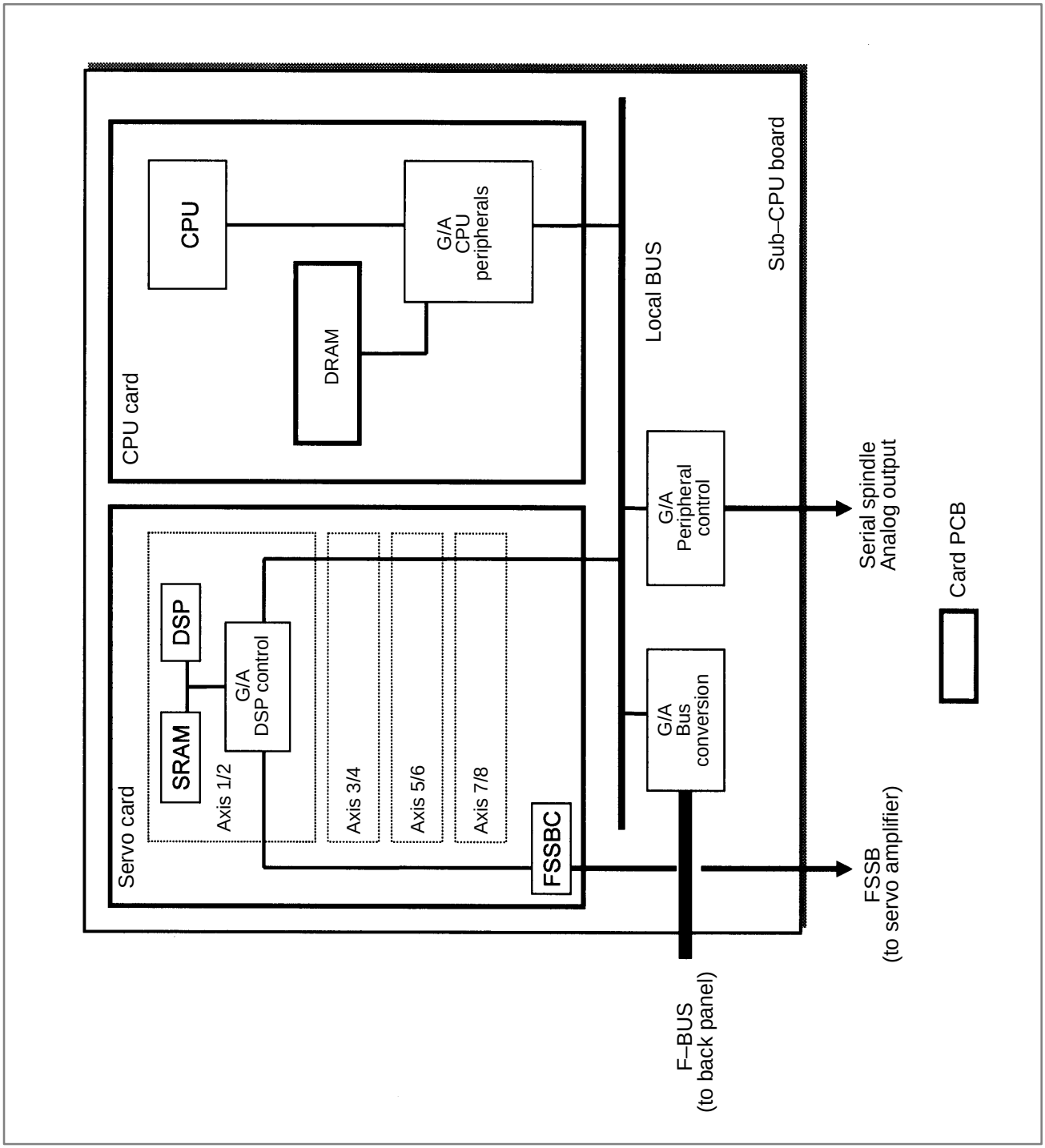

4.4.3 RISC Board, Data Server Board, RISC + Data Server Board

The RISC function and data server function are provided on a single option board. If the RISC function alone is needed, a RISC board is used. If just the data server function is needed, a data server board is used. If the two functions are needed, a RISC + data server board is used.
If the data server function is used, an ATA card adapter is mounted on the board. This board and ATA card adapter are connected by a flat cable.

- **Specifications**

Item	Code
RISC + Data server board	A16B–3200–0390
RISC board	A16B–3200–0391
Data server board	A16B–3200–0352
CPU card	A20B–3300–0102
ATA card adapter	A20B–2100–0500

- **Mounting positions of connectors, LEDs, etc.**

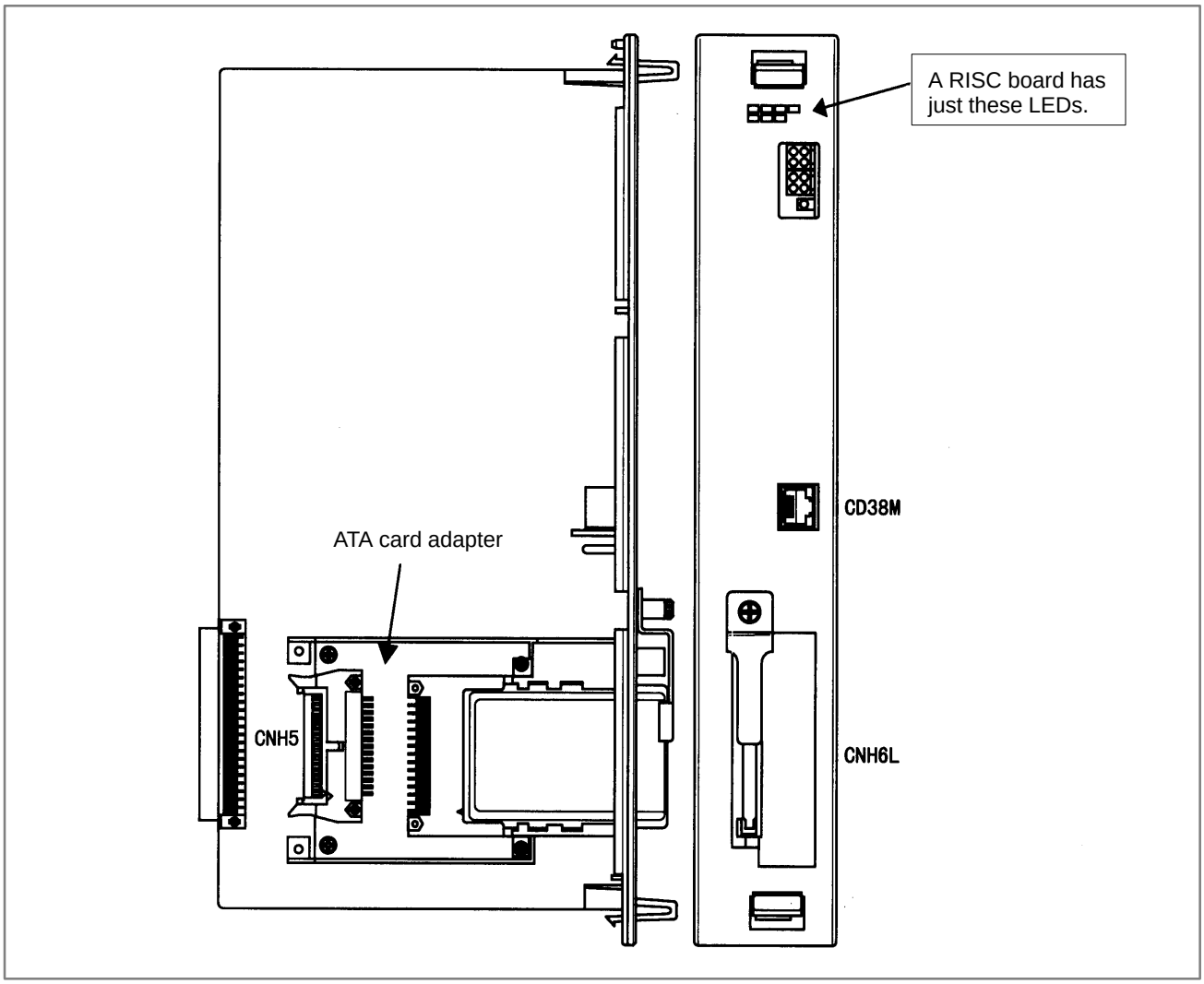

- **Mounting position of card (For RISC card, RISC+DATA SERVER board)**

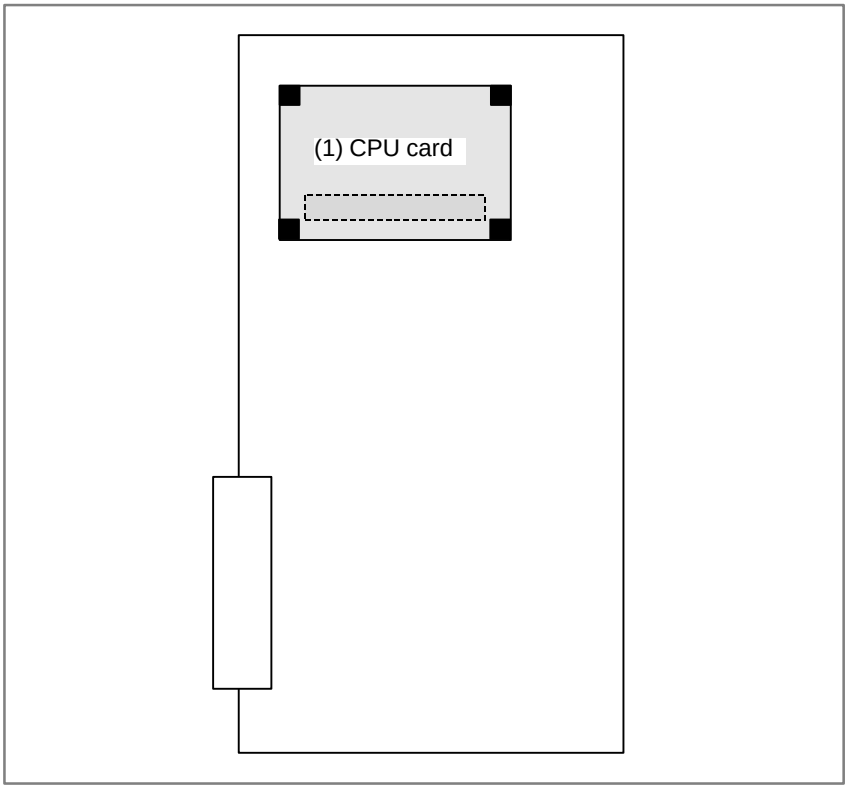

No.	Item	Code	Function	Remarks
(1)	CPU card	A20B–3300–0102		Standard type

- **LED display of the RISC function**

The RISC function uses the green STATUS LEDs and red ALARM LEDs in the upper part of the face plate. The red ALARM LEDs are used also by the data server function.

<1> Status LED indication (green LED turned on)

Alarm LED	State
□□□□	The power is not turned on.
■□□□	Waiting for the CNC (1) (Check the cause of the CNC.)
□■□□	Module ID error (Replace the printed circuit board or FROM.)
■■□□	Waiting for the CNC (5) (Check the cause of the CNC.)
□□■□	ROM test error (Replace the printed circuit board or FROM.)
■□■□	Waiting for the CNC (3) (Check the cause of the CNC.)
■■■□	System error (Replace the printed circuit board or FROM.)
□□□■	RAM test error (Replace the printed circuit board.)
■□□■	Waiting for the CNC (2) (Check the cause of the CNC.)
□■□■	Parameter error (Replace the printed circuit board or FROM.) (B437 series only)
□□■■	DRAM test error/waiting for interrupt at interpolation cycles (Replace the printed circuit board.)
■□■■	Waiting for the CNC (4) (Check the cause of the CNC.) (B451 series only)
■■■■	The power is turned on, but the processor is not started yet.

■ : ON □ : OFF

<2> Status LED indication (green LED blinking)

Alarm LED	State
★□□□	Command being executed (reset)
□★★□	Command being executed (preprocessing, distribution processing)
□□□★	Waiting for a command
□★□★	Waiting for NC statement input
★★□★	Command being executed (parameter modification) (B437 series only)
□□★★	Automatic operation is not started yet. (Replace the printed circuit board.) (B451 series only)

★ : Blinking □ : OFF

<3> Alarm LED indication (red LED)

Alarm LED	State
■□■	The power supply for the processor core on the RISC board is defective.
□□■	A DRAM parity error occurred on the CPU card.
■■□	System emergency
□■□	(Reserved)

■ : ON □ : OFF

NOTE
The LEDs display any other pattern if an error occurs in the data server option.

- **LED display of the data server function**

The data server board function uses four green STATUS LEDs for status display and red LEDs for alarm display (used also by the RISC function). The function uses other green LEDs and a single red LED for communication status display.

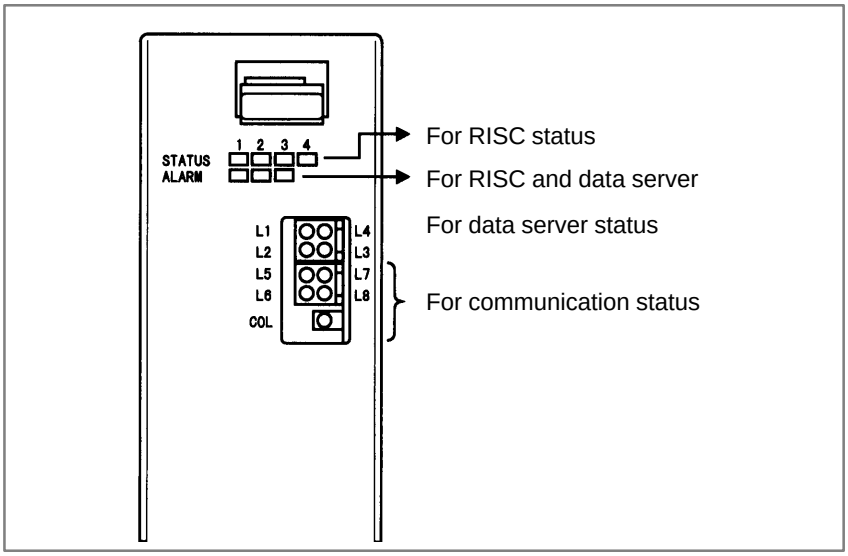

LED status transition at power–up

LED statuses ○: Off ●: On ☆: Blink ◇: Don't care

No.	LED display (L1 to L4)	Board status
1	○○ ○○	Power off
2	●● ●●	Initial state immediately after power–up
3	○● ●●	MPU initialization completed
4	○● ○●	Firmware downloading completed
5	○● ○○	Control transferred to OS
6	●○ ●●	OS PHASE 1
7	○○ ●●	OS PHASE 2
8	●○ ○●	OS PHASE 3
9	○○ ○●	OS PHASE 4
10	☆○ ○○	Activation completed

If the board is normally activated, the LEDs display the pattern of No.10 and keep this state until an error is detected.

LED display when an error occurs (STATUS L1 to L4)

The STATUS LEDs alternately display the LONG and SHORT patterns. The LONG pattern is held longer than the SHORT pattern.

LED statuses ○: Off ●: On

No.	STATUS LED indication		Ethernet/data server board state	
	LONG	SHORT		
1	○● ○○	●○ ○○	Failure caused by this board	System reset
2	○● ○○	○○ ●○		Machine check
3	○● ○●	●○ ○○		DRAM parity alarm
4	○● ○●	○○ ●○	Failure caused by another board	NMI of another module

NOTE
If an error, indicated by repeatedly flashing a LONG and SHORT combination other than the above, occurs, contact FANUC.

LED display when an error occurs (ALARM)

LED statuses □: Off ■: On

No.	LED display 123	Board status
1	□■■	An MPU transfer error occurred.
2	■■■	A parity error occurred in the main memory.

NOTE
Any other pattern is displayed if an error occurs in the RISC option.

LED display for communication status
Communication status (L5 to L8)

LED statuses ○: Off ●: On ☆: Blink ◇: Don't care

No.	LED display	Communication status
1	◇◇ ●◇	Data transmission in progress
2	◇◇ ◇●	Data reception in progress
3	◇● ◇◇	Hub normally connected

Communication status (COL)

No.	LED display	Communication status
1	●	Lit when a data collision occurs.

COL: This LED is frequently lit if the traffic of Ethernet communication is large or if the peripheral noise is large.

4.4.4
Loader Control Board

- **Specification**

Name	Specification
Loader Control Board	A16B–2203–0740

- **Connector location**

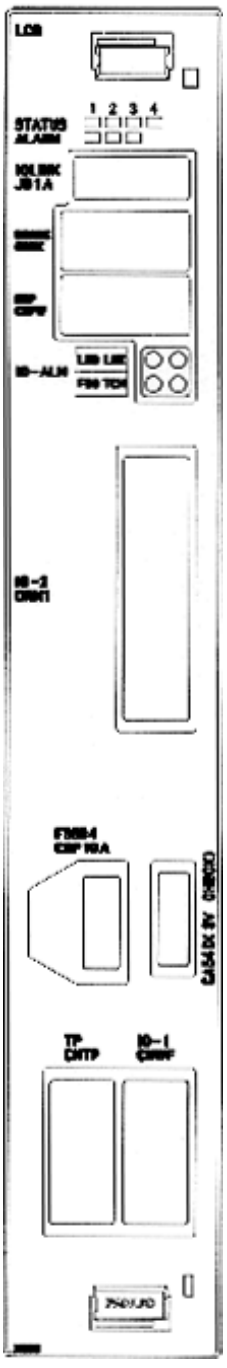

LED display

JD1A : FANUC I/O LINK

CNBK : Brake drive output

CNPW : Emergency stop control

LED display for I/O alarm

CRM1 : DI/DO for loader main body

COP10A : FSSB

CA69D : Servo check

CNTP : DI/DO for loader operator’s panel

CNWF : DI/DO for workpiece feeder

● Card location

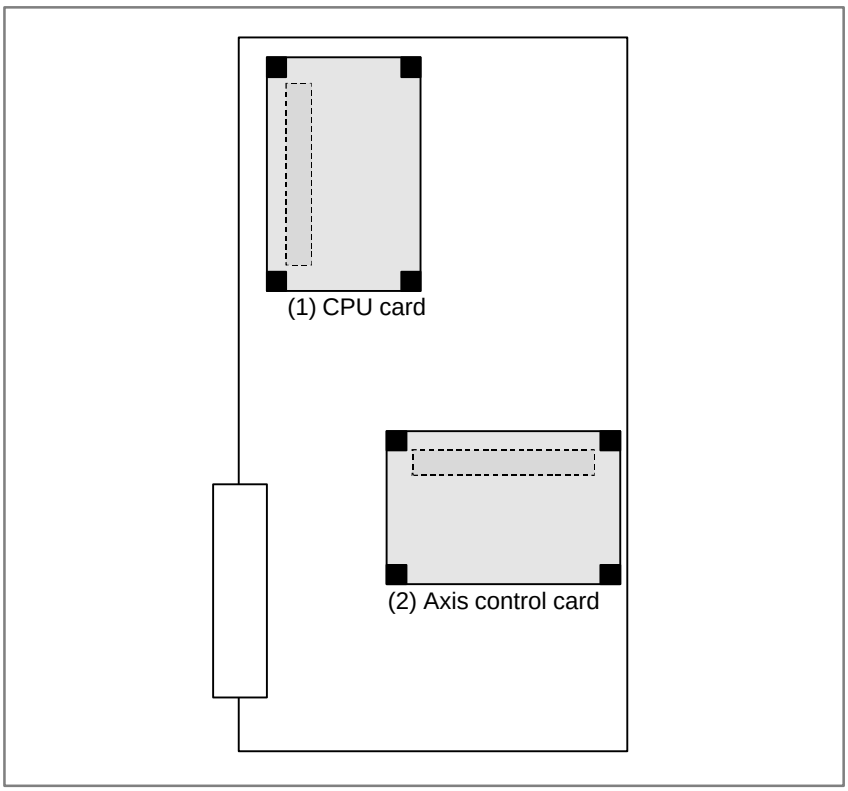

No.	Item	Code	Function	Remarks
(1)	CPU card	A20B–3300–0291	CNC control	
(2)	Axis control card	A20B–3300–0032	Axis control	4 axes
		A20B–3300–0033		2 axes

– LED Display Transition at Power–up

NO.	LED display	NC Status
1	STATUS:□□□□	Power off
2	STATUS:■■■■	Startup status immediately after power is turned on
3	STATUS:□■■■	RAM initialized
4	STATUS:■□■■	Software ID set; keys initialized
5	STATUS:□□■■	Waiting for completion of software initialization 1
6	STATUS:■■□■	Waiting for completion of software initialization 2
7	STATUS:□■□■	Position coder initialized, etc.
8	STATUS:□■■□	Waiting for digital servo initialization
9	STATUS:■□□□	Initialization completed (steady state)

■ : ON □ : OFF
The STATUS LEDs are green.

– LED Display when an Error occurs

LED display	Description
ALM:□■□	System failure occurred. The software detects the error and stops the system.
ALM:■■□	Error in Local bus on the loader control board occurred.
ALM:□□■	System emergency occurred. Hardware detects the error.
ALM:□■■	SRAM parity error on the loader control board occurred.

■ : ON □ : OFF
The ALARM LEDs are red.

NOTE
When two or more error occur simultaneously, the LED display shows the state of low side on the table above.

4.4.5 C Board, Serial Communication Board

- **Specifications**

Item		Code
C board		A20B–8100–0330
Serial communication board	R.B./DNC2: RS232C I/F	A20B–8100–0334
	R.B./DNC2: RS422 I/F	A20B–8100–0335
	DNC1: RS485 I/F	A20B–8100–0336

- **Mounting positions of connectors, LEDs, etc.**

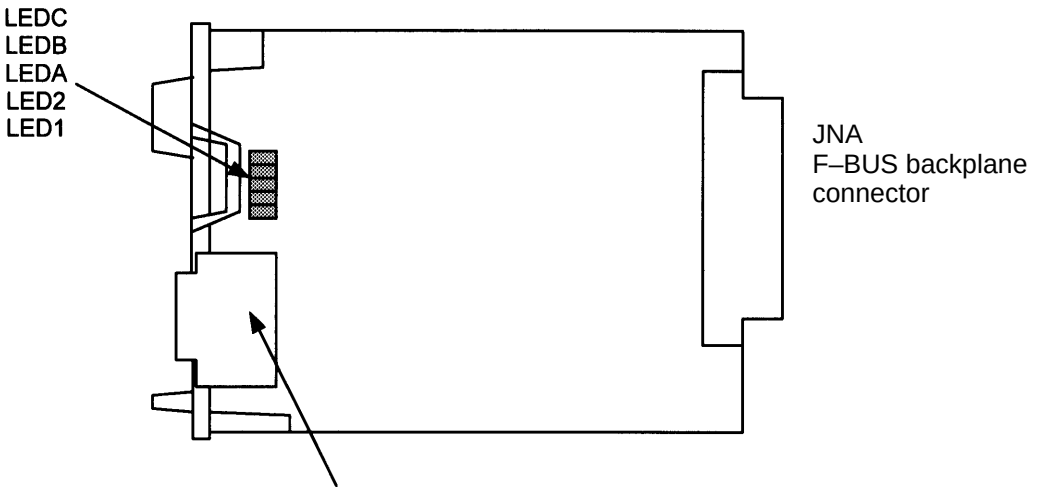

The connector is mounted on a serial communication board.
JD5L: RS232C interface
JD6L: RS422/485 interface

- **LED display**

- LED display when an error occurs □: Off ■: On

CBA	Status
□□■	The CPU is not yet started (reset state).(*1)
■■□	A DRAM parity error occurred.
□■□	A bus error occurred in the CPU on this board.
■□□	An error occurred in the local bus on this board.

NOTE
1 The LEDs display this pattern because the CPU is in the reset state immediately after power–up.
2 If the LEDs display any of the patterns, the hardware may be defective (except in the reset state at power–up).

- **Mounting positions of card and DIMM module**

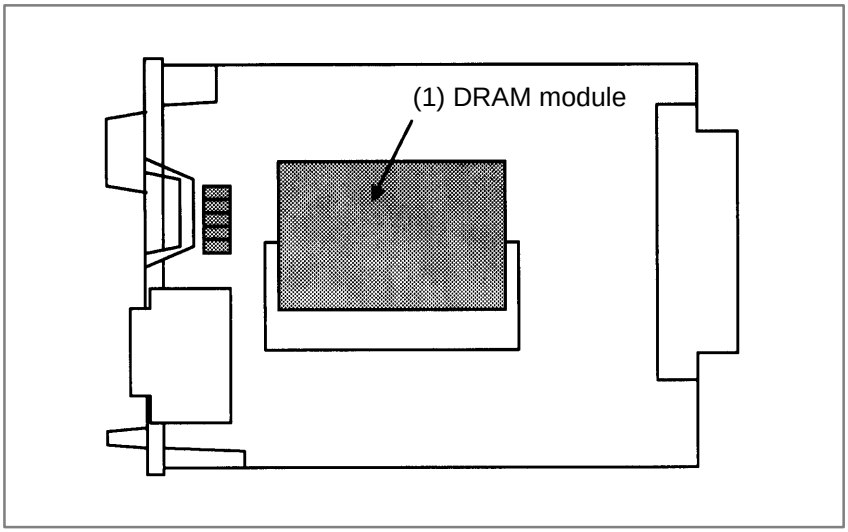

No.	Item	Code	Function	Remarks
(1)	DRAM module	A20B–3900–0042	System RAM	4MB

4.4.6 HSSB Interface Board

- **Specifications**

Item	Code
HSSB interface board	A20B–8001–0730

- **Mounting positions of connectors, LEDs, etc.**

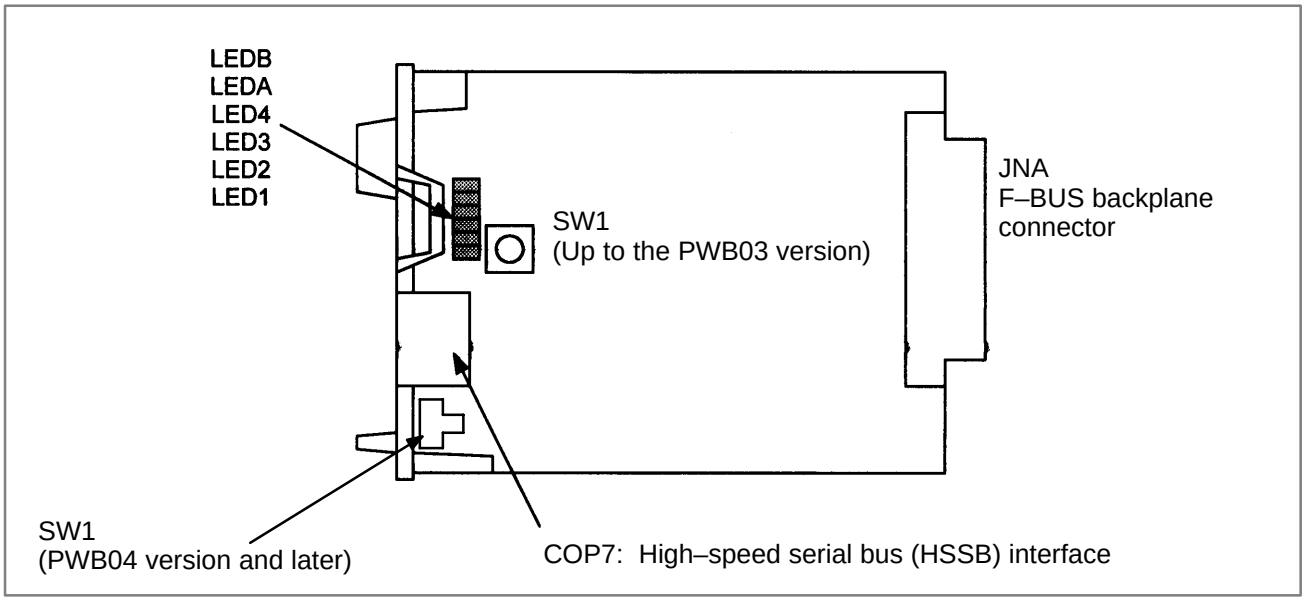

- **LED display**

LEDB	Red	HSSB communication has been interrupted.
LEDA	Red	A RAM parity alarm occurred in the common RAM on the board. The common RAM is mounted on this board. The RAM is used to exchange information between the CNC and personal computer and is not battery–backed.

Status display of the green LEDs □: Off ■: On

4 3 2 1	Status
■■■■	Immediately after power–up
■■■□	HSSB board initialization in progress
■■□■	Waiting for the booting of the PC side
■■□□	CNC screen displayed on the PC
■□□□	Activation normally terminated, normal operation in progress
□■■□	Thermal error detected by the CNC display unit with PC functions or PANEL *i*
□■□■	HSSB communication interrupted
□■□□	Parity alarm in the common RAM
□□■■	Communication error
□□■□	Battery alarm in the CNC display unit with PC functions or PANEL *i*

NOTE
The PC used in the above table includes PANEL *i*, CNC display unit with PC functions, and CNC display unit for the *i*s series CNC.

- **Rotary switch**

1) Setting of ROTARY SWITCH in case of connecting to PC or PANEL *i*

The power–on start sequence can be modified using rotary switch on the board.

setting of rotary switch	Description
0	Setting for maintenance. The start menu is displayed. It is possible to start boot and IPL from the PC or PANEL *i*.
1	Setting for usual operation. The start menu is not displayed. It is impossible to start boot or IPL from the PC or PANEL *i*.
2	The CNC and PC or PANEL *i* are started independently of each other without handshake. * CNC CNC is available if PC is not turned on or not connected. (Display for CNC and MDI or Operation panel etc. are needed to operate.) The start menu is not displayed if PC or PANEL *i* is connected and turned on. * PC or PANEL *i* The start menu is not displayed and it is impossible to start boot or IPL from the PC or PANEL *i* if CNC is connected and turned on. This setting makes PC or PANEL *i* or CNC be able to be turned on/off the power individually if HSSB device driver for Windows 95/98, NT4.0 or 2000 is installed. In case of Multi–connection (connecting some CNCs to one PC or PANEL *i*), please set to this setting usually.

NOTE
PANEL *i* used here represents hardware that can operate on a stand–alone basis (provide a stand–alone option).

2) Setting of ROTARY SWITCH in case of connecting to CNC display unit with PC functions

The power–on start sequence can be modified using rotary switch on the board and short terminal (SW5) on CNC display unit with PC functions.

setting of rotary switch	short terminal (SW5)	Description
0	OPEN	Setting for maintenance. The start menu is displayed. It is possible to start boot and IPL from CNC display unit with PC functions or PANEL *i*.
1	OPEN	Setting for usual operation. The start menu is not displayed. It is impossible to start boot or IPL from CNC display unit with PC functions or PANEL *i*.
2	SHORT	The CNC and CNC display unit with PC functions or PANEL *i* are started independently of each other without handshake. * CNC CNC is available if CNC display unit with PC functions or PANEL *i* is not turned on or not connected. (Display for CNC and MDI or Operation panel etc. are needed to operate.) The start menu is not displayed if CNC display unit with PC functions or PANEL *i* is connected and turned on. * CNC display unit with PC functions or PANEL *i* CNC display unit with PC functions or PANEL *i* is available if CNC is not turned on or not connected. Temperature management function of CNC display unit with PC functions or PANEL *i* doesn't work. Please make sure that the temperature is proper for CNC display unit with PC functions or PANEL *i*. The start menu is not displayed and it is impossible to start boot or IPL from CNC display unit with PC functions or PANEL *i* if CNC is connected and turned on. This position must be used at maintenance only.

3) Setting of ROTARY SWITCH in case of connecting to CNC display unit for *i*s series CNC

The power–on start sequence can be modified using rotary switch on the board. Normally, set this rotary switch to 1.

setting of rotary switch	Description
0	Setting for maintenance. The start menu is displayed. It is possible to start boot and IPL from the PC.
1	Setting for usual operation. The start menu is not displayed. It is impossible to start boot or IPL from the PC.
2	Setting for maintenance. Normally, this position is not used.
7	Setting for maintenance. The start menu is displayed when MDI keys <6> and <7> are pressed. It is possible to start boot or IPL from the PC.

4.4.7 Symbol CAP*i* T Board

- **Specifications**

Item	Code
Symbol CAP*i* T board	A20B–8100–0560

- **Mounting positions of connectors, LEDs, etc.**

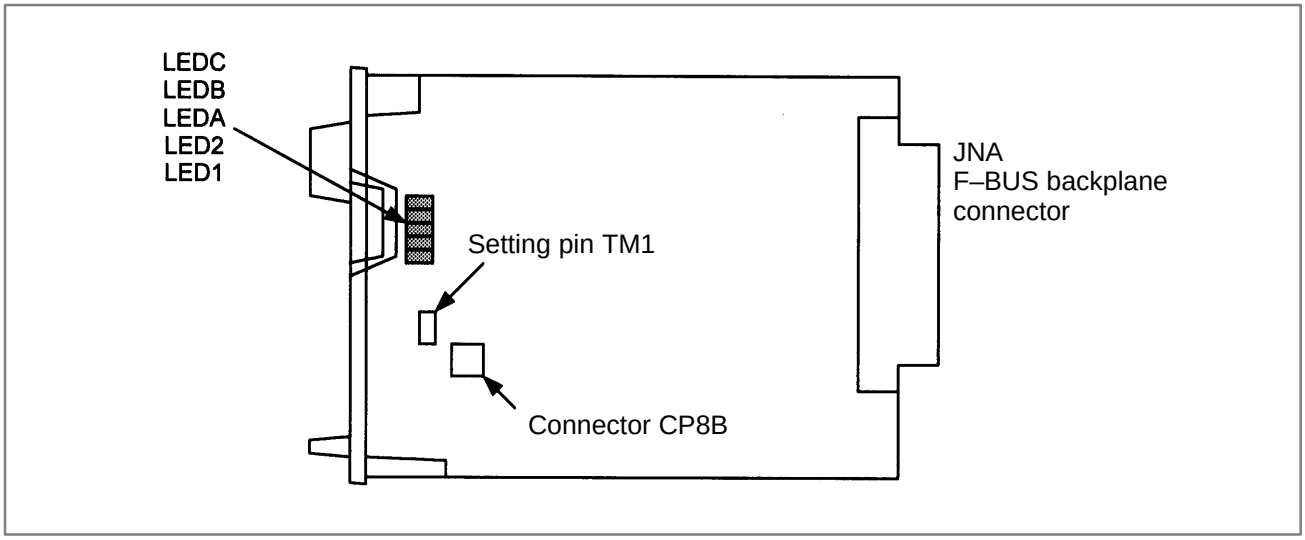

- **LED display**

Status display of the red LEDs □: Off ■: On

CAB	Status
□□■	An error occurred in the local bus on this board.
□■□	An error occurred in the local bus on this board. Alternatively, an error occurred on the main CPU board or another option board.
□■■	The CPU is not yet started (reset state).(*1)
■□□	A parity alarm occurred in the SRAM.
■□■	A bus error occurred in the CPU on this board.
■■□	A parity alarm occurred in the DRAM.

NOTE
1 The LEDs display this pattern because the CPU is in the reset state immediately after power–up.
2 If the LEDs display any of the patterns, the hardware may be defective (except in the reset state at power–up).

- **Setting pin TM1 and connector CP8B**

Setting pin TM1 and connector CP8B are provided for testing at FANUC. The setting of the pin must not be changed.

- **Mounting positions of card and DIMM module**

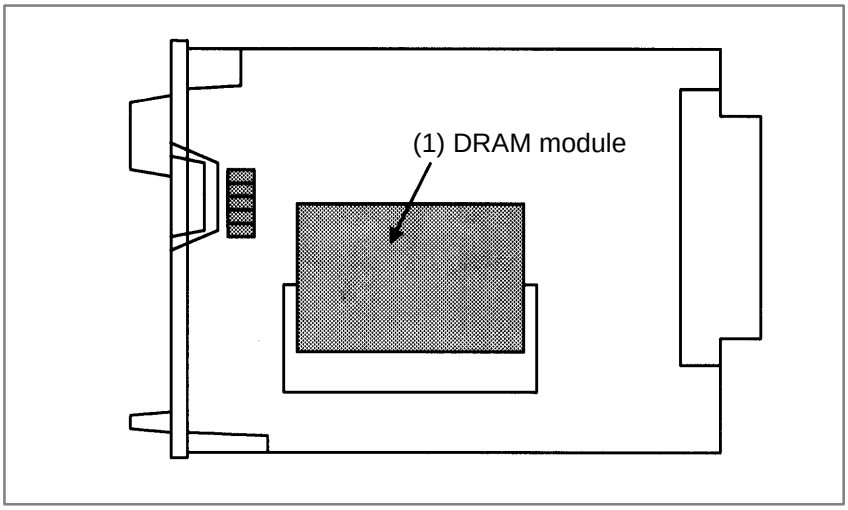

No.	Item	Code	Function	Remarks
(1)	DRAM module	A20B–3900–0042	System RAM	4MB

4.4.8 I/O Link–II Board

- **Specifications**

Item	Code
I/O Link–II board	A20B–8100–0381

- **Mounting positions of connectors, LEDs, etc.**

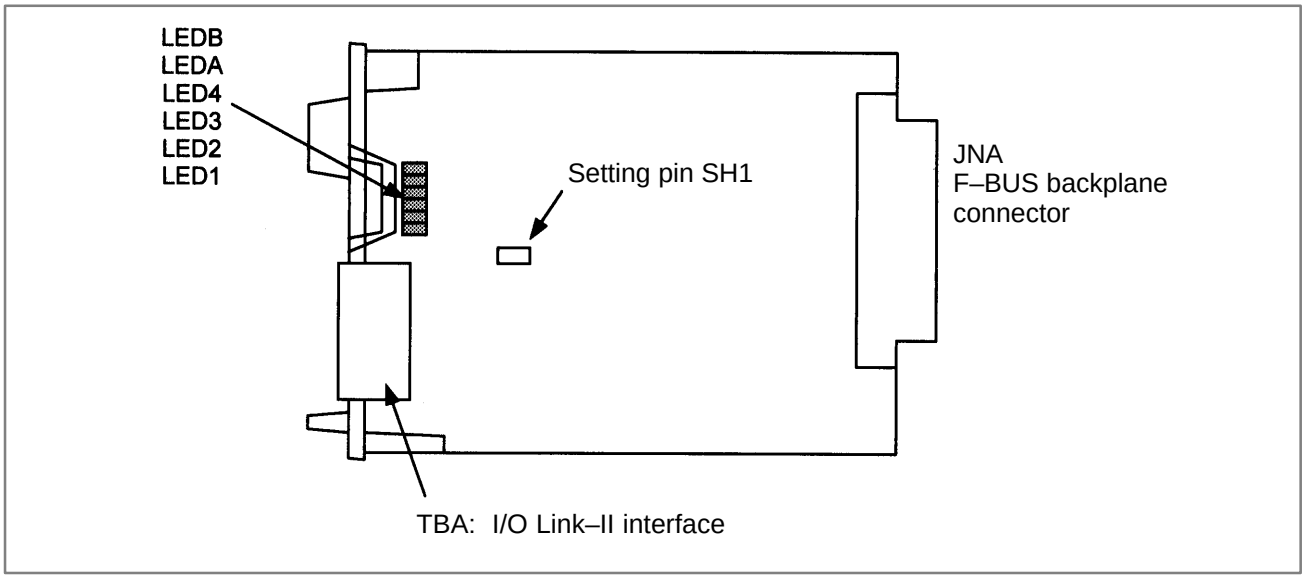

- **LED display**

  - Status LED display (green)

	Status
LED1	Lit when the board is released from the reset state and starts operating.
LED2	Lit when communication starts. This LED is left on until a reset occurs.
LED3	Lit each time transmission is performed. (Actually, this LED appears to be lit continuously.)
LED4	Reserved

  - Alarm LED display (red)

	Status
LED1	Lit when the board is released from the reset state and starts operating.
LEDA	Lit if any of the following errors is detected when data is received. This LED goes off when normal data is received next. · Reception buffer overflow · Fractional bit data detection · Overrun error detection · CRC error detection · Abort error detection
LEDB	Lit when a parity alarm occurs in the DRAM on this board.

- **Setting pin SH1**

  This pin is used to set the I/O Link–II board as the master or slave.

4.4.9 Ethernet Board

- **Specifications**

Item	Code
Ethernet board	A20B–8100–0450

- **Mounting positions of connectors, LEDs, etc.**

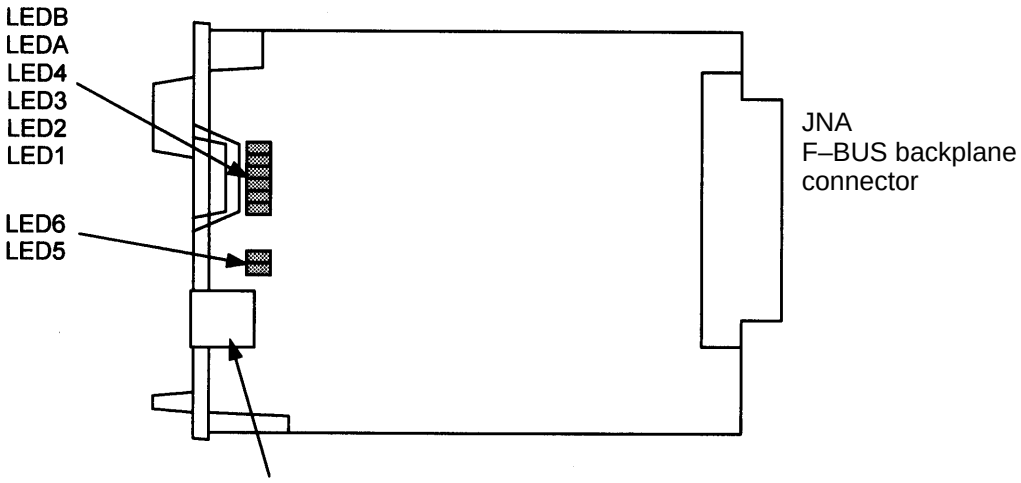

- **LED display**

- Status transition at power–up, displayed by the green LEDs

No.	4 3 2 1	Ethernet board status
1	□□□□	Power off
2	■■■■	Initial state immediately after power–up
3	■■■□	MPU initialization completed
4	■■□□	Firmware downloading completed
5	■□□□	Control transferred to OS
6	□■■■	OS PHASE 1
7	□■■□	OS PHASE 2
8	□■□■	OS PHASE 3
9	□■□□	OS PHASE 4
10	□□□☆	Start–up completed

If the board has normally started up, the LEDs display the pattern of No.10. The LEDs keep this pattern until an error occurs.

- Status LED display when an error occurs (green)
  The status LEDs alternately display the LONG and SHORT patterns.
  The LONG pattern is held longer than the SHORT pattern.

No.	STATUS LED indication		Ethernet/data server board state	
	LONG 4321	SHORT 4321		
1	■□□□	□□□■	Failure caused by this board.	System reset
2	■□□□	□□■□		Machine check
3	■■□□	□□□■		DRAM parity alarm
4	■■□□	□□■□	Failure caused by another board.	NMI of another module

NOTE
If an error, indicated by repeatedly flashing a LONG and SHORT combination other than the above, occurs, contact FANUC.

- Alarm LED display (red) when an alarm occurs

	State
LEDB	Lit when a parity alarm occurs in the main memory on this board.

- Communication status LED display (red)

LED5 (TX)	Lit when data is sended.
LED6 (RX)	Lit when data is received.
LEDA (COL)	Lit when a data collision occurs.

NOTE
LEDA (COL) is frequently lit if the traffic of Ethernet communication is large or if the peripheral noise is large.

4.4.10 DeviceNet Board

- **Specifications**

Item	Code
DeviceNet board	A20B–8100–0491

- **Mounting positions of connectors, LEDs, etc.**

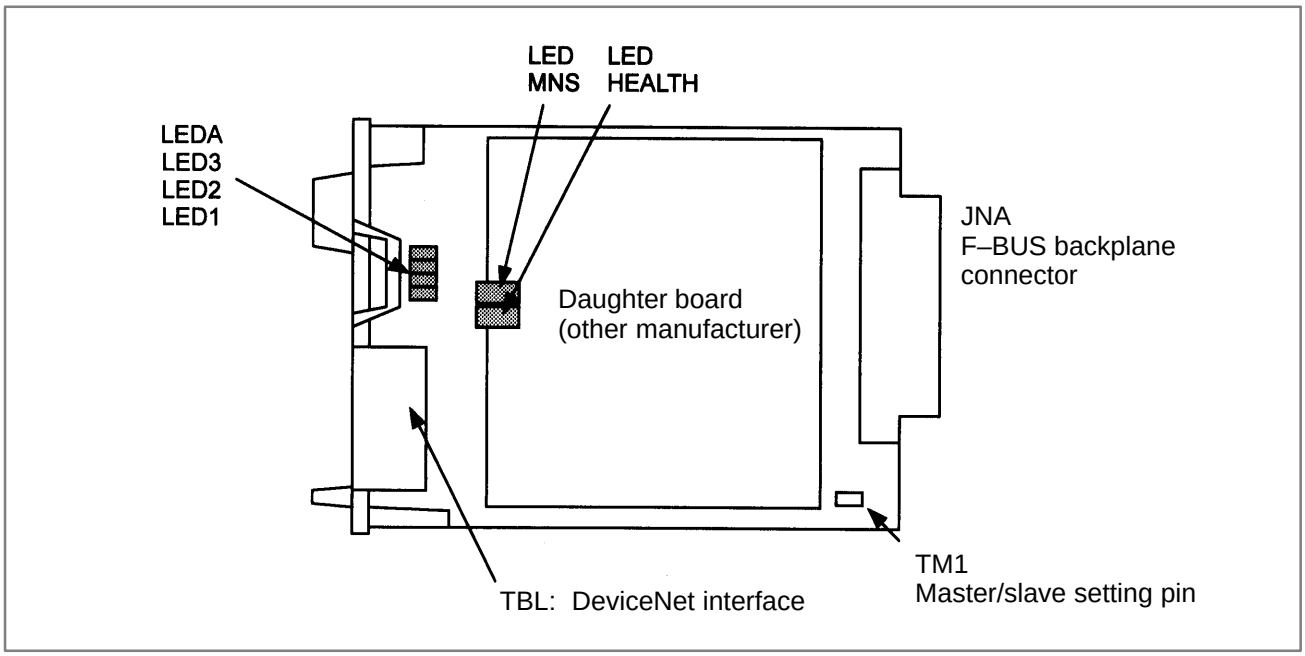

- **LED display**

- Meaning of red LED

LEDA	Lit when an error occurs on the daughter board. If this LED is lit, replace the DeviceNet board.

- Meanings of green LEDs

3 2 1	Status
□□■	This board is set as the master.
□■■	This board is set as the slave.

- LEDs on the daughter board

MNS	DeviceNet module/network status LED This LED indicates whether the DeviceNet board is turned on and whether the DeviceNet communication is normally performed. For the meanings of statuses indicated by this LED, refer to the specifications supplied by ODVA.
HEALTH	Daughter board status LED After the board is turned on, the LED is lit in red. If the firmware is loaded into the internal daughter board, the LED is lit in green. This green state continues. If the LED is not lit in green, replace the DeviceNet board.

- **Master/slave setting pin**

This setting pin is used to switch around the master function and slave function of DeviceNet.

- **Precautions**

This DeviceNet board can be removed after the main CPU board is removed. For the procedure, see “Mounting and Removing an Option Board.”
A daughter board of a different manufacturer is mounted on the DeviceNet board. The daughter board alone cannot be replaced.

4.4.11 PROFIBUS Master Board

- **Specifications**

Item	Code
PROFIBUS master board	A20B–8100–0470

- **Mounting positions of connectors, LEDs, etc.**

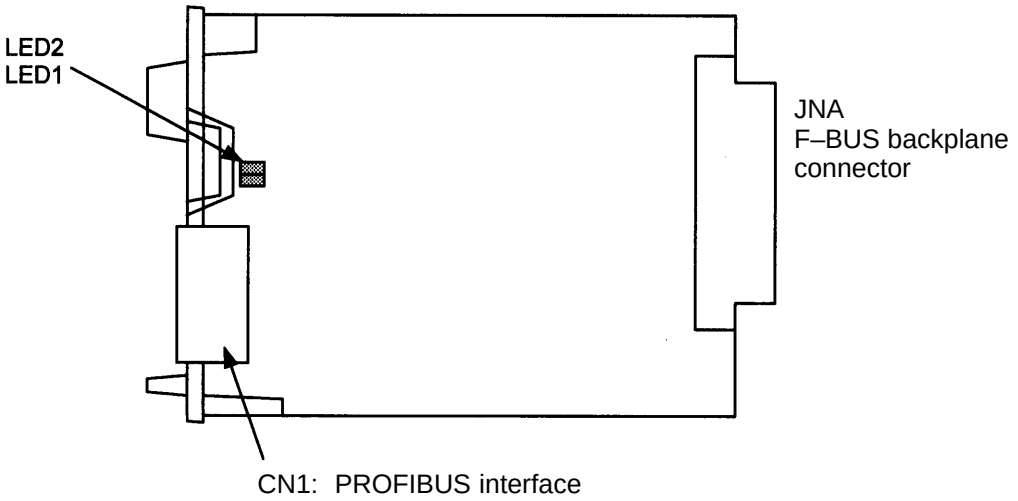

- **LED display**

- Status LED display (green)

	State
LED1	Lit when this board is released from the reset state and starts operating. This LED is not lit at power–up.
LED2	Lit when the communication is normally performed. This LED is not lit at power–up.

4.4.12 PROFIBUS Slave Board

- **Specifications**

Item	Code
PROFIBUS slave board	A20B–8100–0440

- **Mounting positions of connectors, LEDs, etc.**

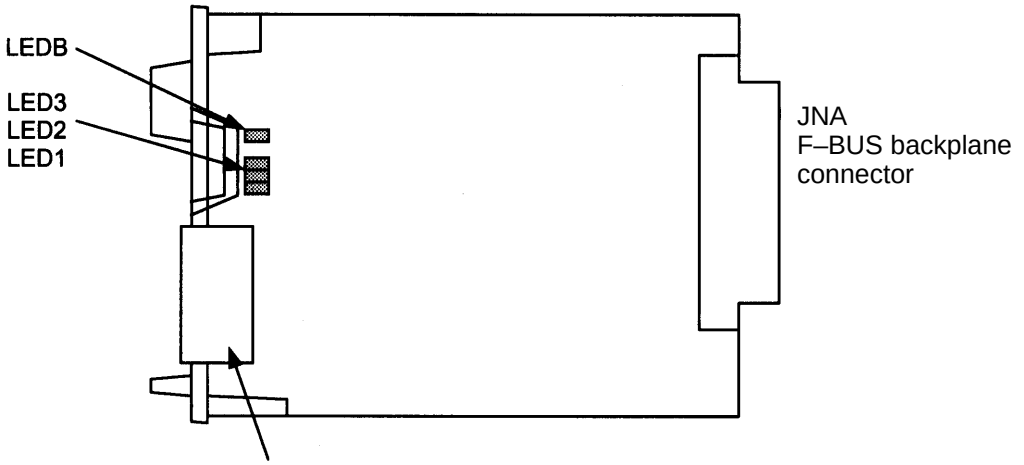

- **LED display**

- Status LED display (green)

	State
LED1	Lit when this board is released from the reset state and starts operating. This LED is not lit at power–up.
LED2	Lit when the communication starts. The LED is not lit at power–up. The LED is not lit also in the following cases: · When no parameter configuration data is received · When illegal parameter configuration data is received
LED3	Lit when the communication is normally performed. This LED is not lit at power–up.
LEDB	Lit when a RAM parity alarm occurs on this board.

4.4.13 FL–net Board

- **Specifications**

Item	Code
FL–net board	A20B–8100–0530

- **Mounting positions of connectors, LEDs, etc.**

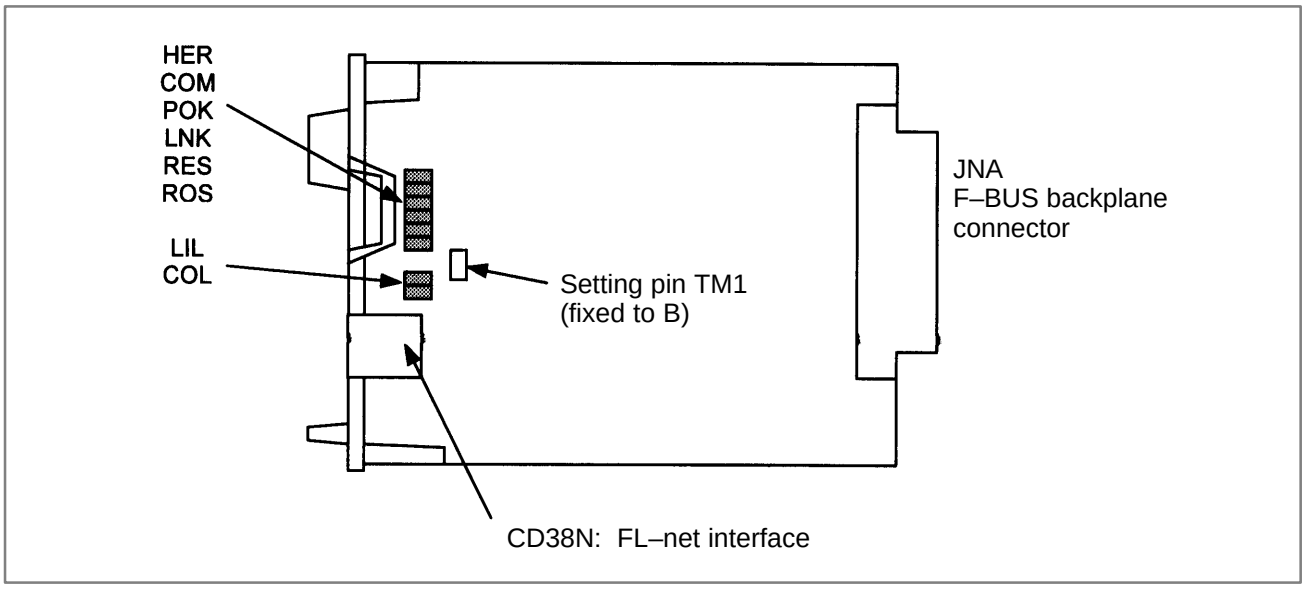

- **LED display**

- Meanings of red LEDs

HER	Lit when a parity alarm occurs in the DRAM on the FL–net board. The board may be defective.
COL	Lit if a data collision occurs on the line.

- Meanings of green LEDs

COM	Lit during data transmission or reception.
POK	Lit when the parameters are normally set.
LNK	This LED indicates the link state and is lit if the board participates in the FA link.
RES	Reserved. This LED is normally lit.
ROS	Lit while the OS is running on the FL–net board.
LIL	Lit when a hub is normally connected.

- **Setting pin TM1**

This setting pin is always set to position B. The setting should not be changed.

4.4.14 Main CPU Board of CNC Display Unit with PC Functions and PANEL *i*

- **Specifications**

Item			Code
Main CPU board (For basic unit A08B–0082–B001 to –B004, –B011 to –B014, –B021 to –B024)	For Windows95	For 10.4”/12.1” LCD	A20B–2100–0690
		For 15.0” LCD	A20B–2100–0691
	For other OS than Windows95	For 10.4”/12.1” LCD	A20B–2100–0692
		For 15.0” LCD	A20B–2100–0693

- **Mounting positions of connectors, LEDs, etc.**

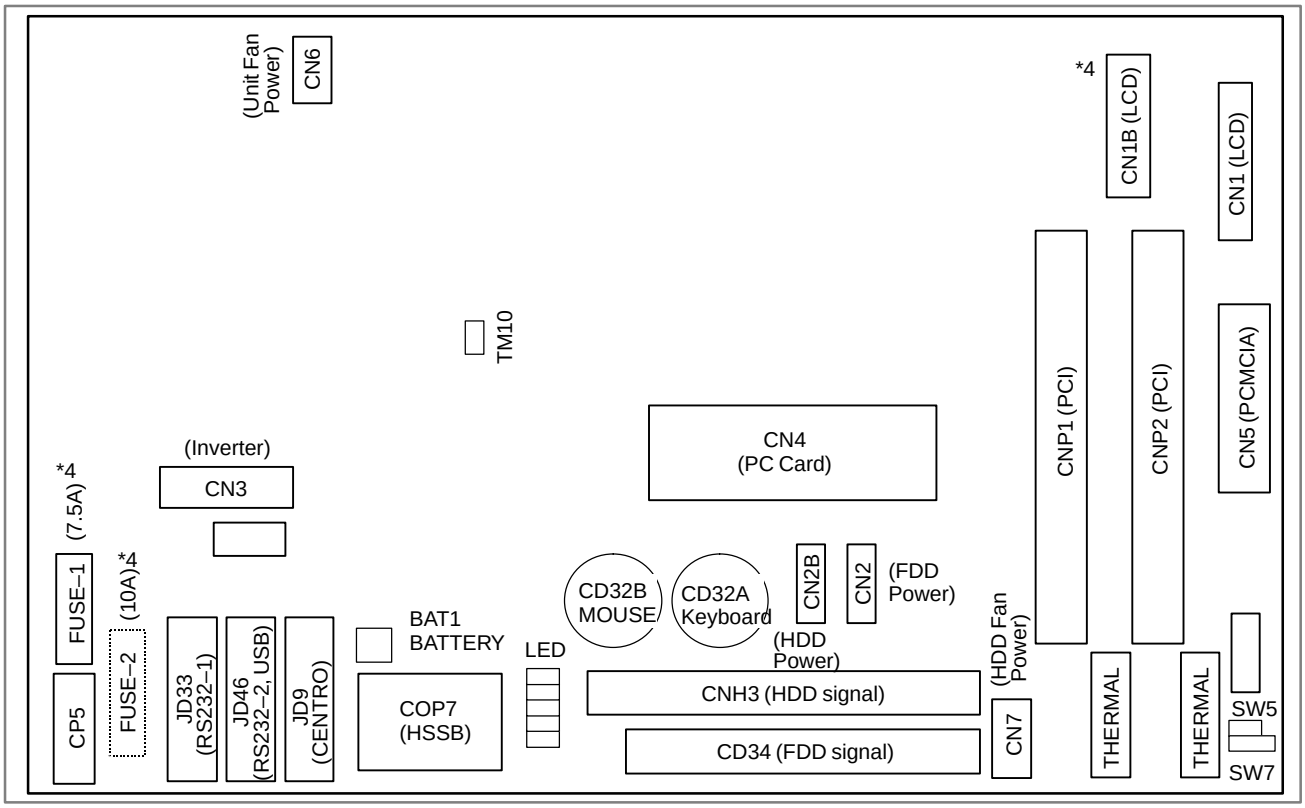

Mounting positions of the parts in the location indicated by *4

Parts \ LCD Unit Type (Code of PC board)	10.4”/12.1”LCD (A20B–2100–0690, –0692)	15.0”LCD (A20B–2100–0691, –0693)	Fuse for maintenance
FUSE–1	Provided	None	A02B–0236–K101
FUSE–2	None	Provided	A08B–0082–K001
CN1B	None	Provided	—

● Specifications

Item			Code
Main CPU board (For basic unit A08B–0082–B031 to –B038, –B041 to –B048, –B051 to –B057) (For basic unit A13B–0193– B031 to –B038, –B041 to –B048, –B051 to –B057)	For Windows95	For 10.4” LCD	A20B–2100–0780
		For 12.1” LCD	A20B–2100–0781
		For 15.0” LCD	A20B–2100–0782
	For other OS than Windows95	For 10.4” LCD	A20B–2100–0783
		For 12.1” LCD	A20B–2100–0784
		For 15.0”LCD	A20B–2100–0785

● Mounting positions of connectors, LEDs, etc.

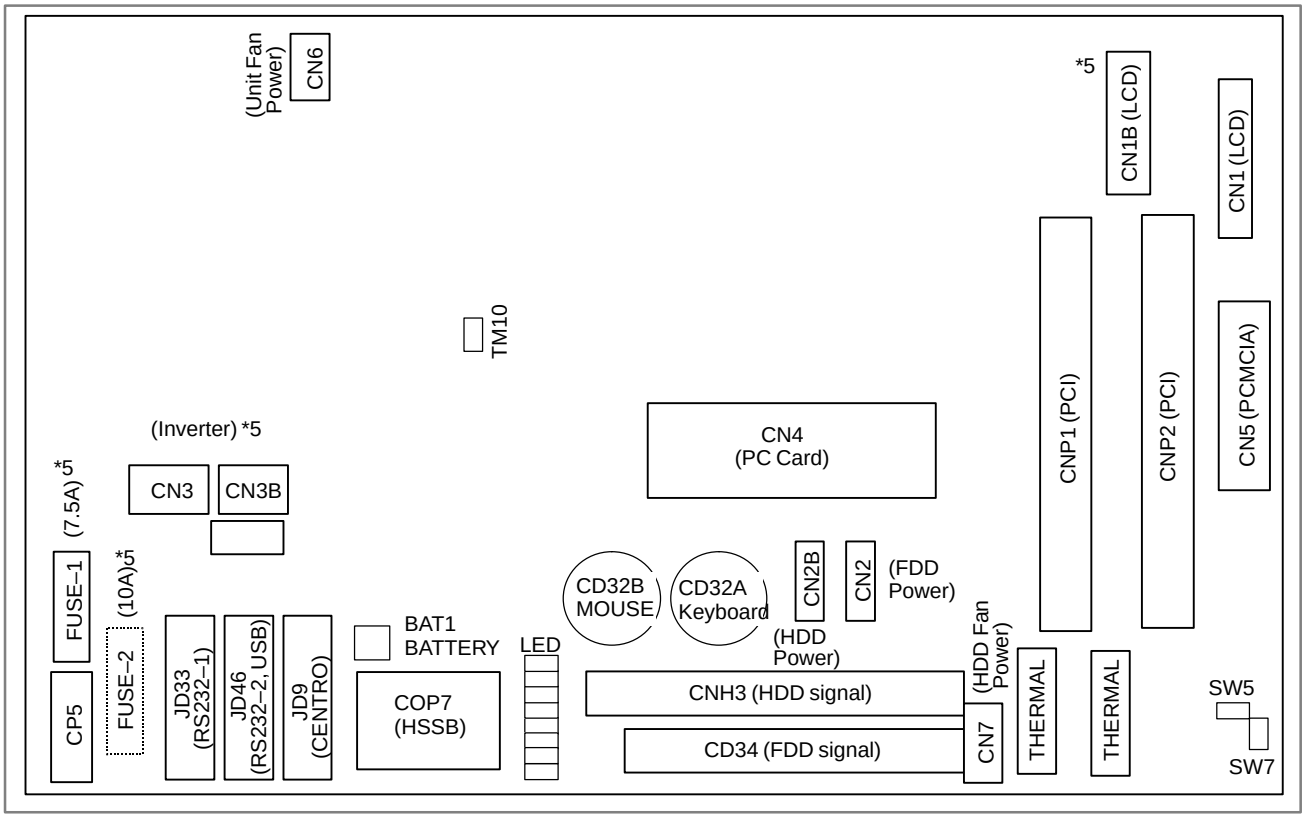

Mounting positions of the parts in the location indicated by *5

Parts \ LCD Unit Type (Code of PC board)	10.4”LCD (A20B–2100–0780, –0783)	12.1”LCD (A20B–2100–0781, –0784)	15.0”LCD (A20B–2100–0782, –0785)	Fuse for maintenance
FUSE–1	Provided	None	None	A02B–0236–K101
FUSE–2	None	Provided	Provided	A08B–0082–K001
CN3	Provided	Provided	Provided	—
CN3B	None	None	Provided	—
CN1B	None	None	Provided	—

● LED display

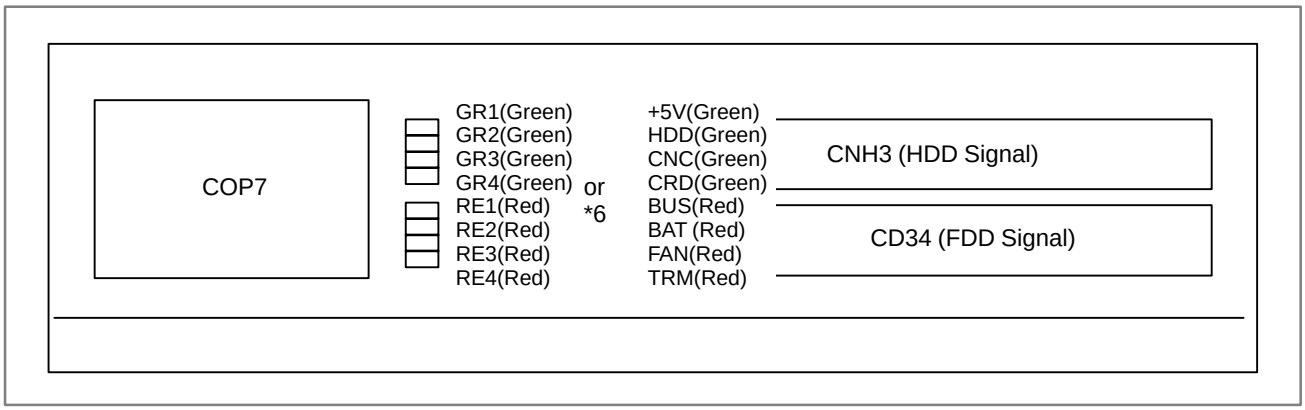

Name 1(*6)	Name 2(*6)	Color	Status
GR1	+5V	Green	Lights when +5 V is supplied.
GR2	HDD	Green	Lights when the HDD is accessed.
GR3	CNC	Green	Lights when the CNC operates normally.
GR4	CRD	Green	Lights when PCMCIA is accessed.
RE1	BUS	Red	Lights when transfer over the HSSB is interrupted. Possible causes are shown below. • The CNC unit is not powered. • The optical fiber cable is not connected. • The interface on the CNC side failed. • The CNC display unit with PC functions or the PANEL *i* failed.
RE2	BAT	Red	Indicates a battery alarm. Replace the battery installed in the CNC display unit with PC functions or in the PANEL *i*.
RE3	FAN	Red	Lights when the basic unit fan or HDD fan stops. Replace the failed fan.
RE4	TRM	Red	Indicates a temperature alarm. This LED lights when the CPU detects a high temperature that falls outside the use range. (This decreases the operating speed of the CPU.)

*6:These labels may vary with the drawing number or version number of the main board.

● Short plug settings

Short plug	Settings	Location		
SW5 SW7 (A20B–2100 –0690 to –0693)	Reserved	Do not change the factory–set defaults.	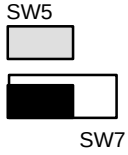	: Open : Short : Short (PANEL *i*) Open (CNC display unit with PC functions)
SW5 TM7 (A20B–2100 –0780 to –0785)	Reserved	Do not change the factory–set defaults.	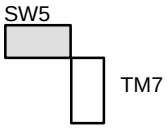	
TM10	Reserved	This short plug is provided for testing purpose. Be sure to insert this plug.		: Short

4.4.15 Mother Board of CNC Display Unit for *i*s Series

Item	Code
Mother Board of CNC display unit for *i*s series	A20B–8100–0800

- **Mounting positions of connectors**

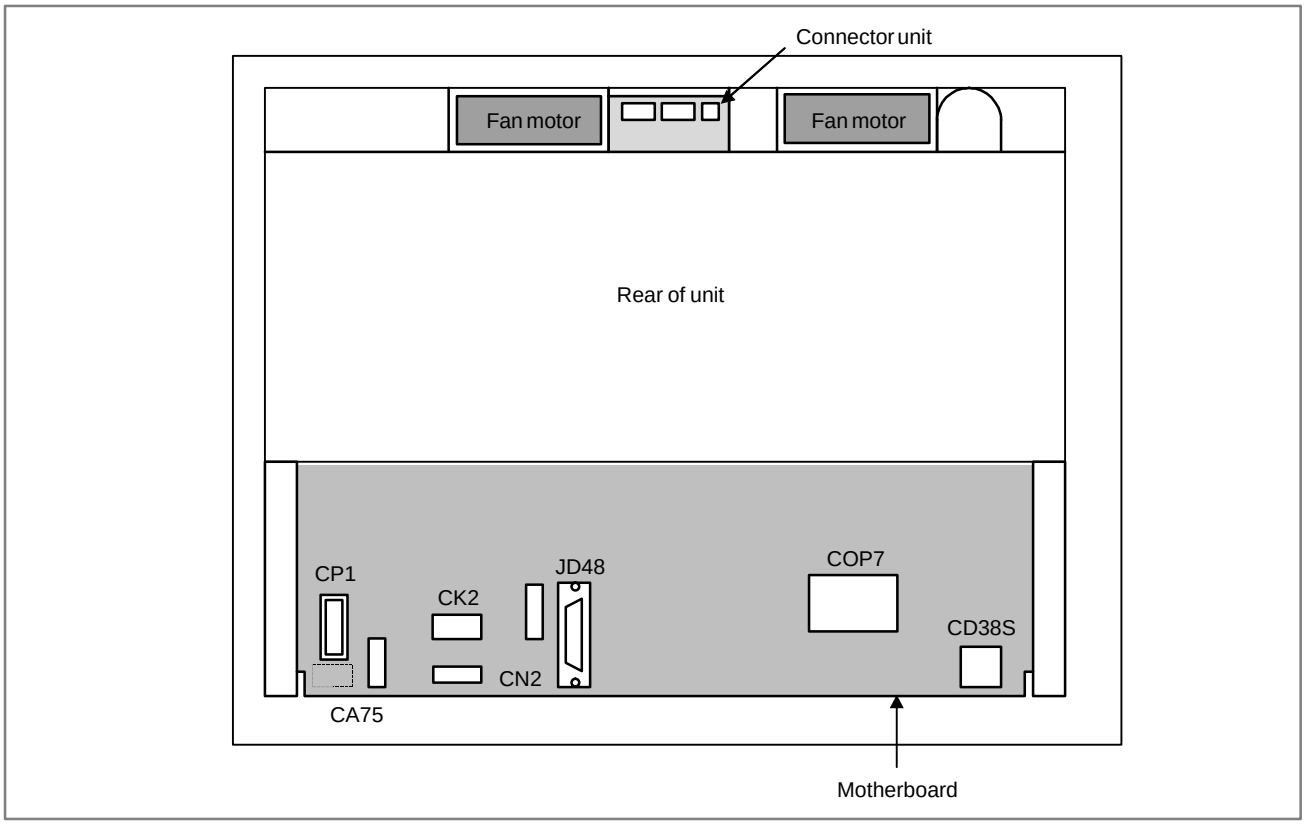

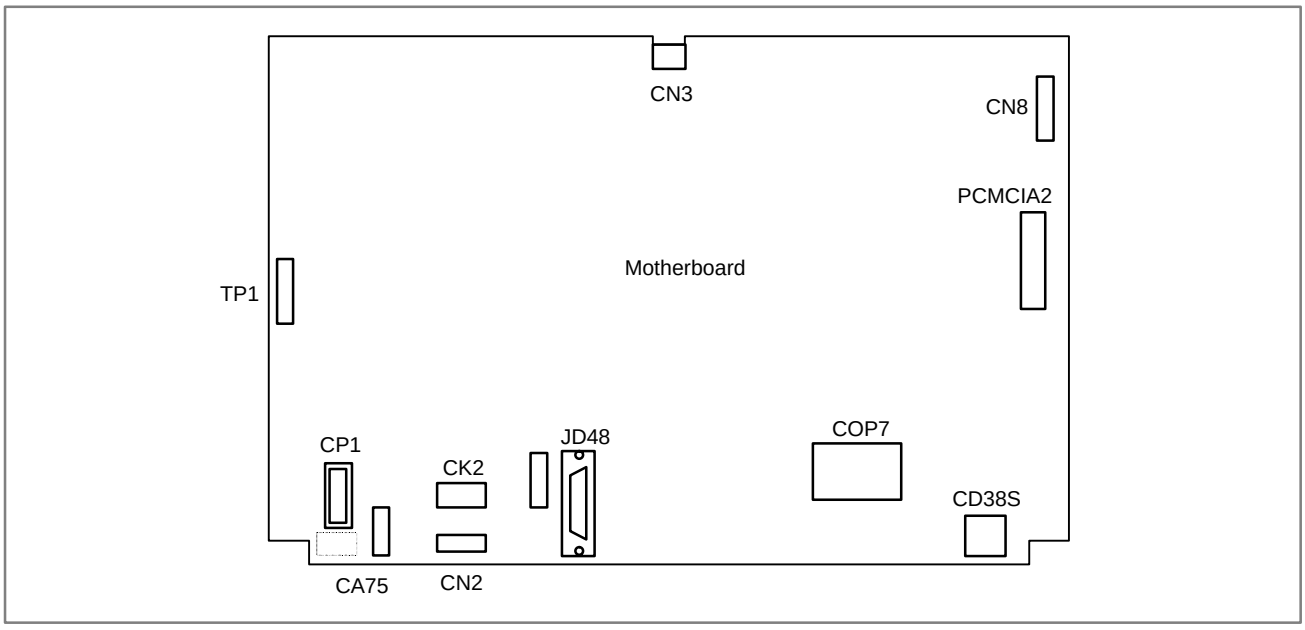

Connector number	Use
JD48	PC side RS232C,USB
COP7	High–speed optical communication(HSSB)
CN2,CK2	Soft key
CP1	DC24V–IN
CD38S	PC side Ethernet(10BASE–T/100BASE–TX)
TP1	Touch panel
CA75	Backup unit
CN8	Video signal interface
PCMCIA2	PCMCIA interface

- **Mounting position of cards**

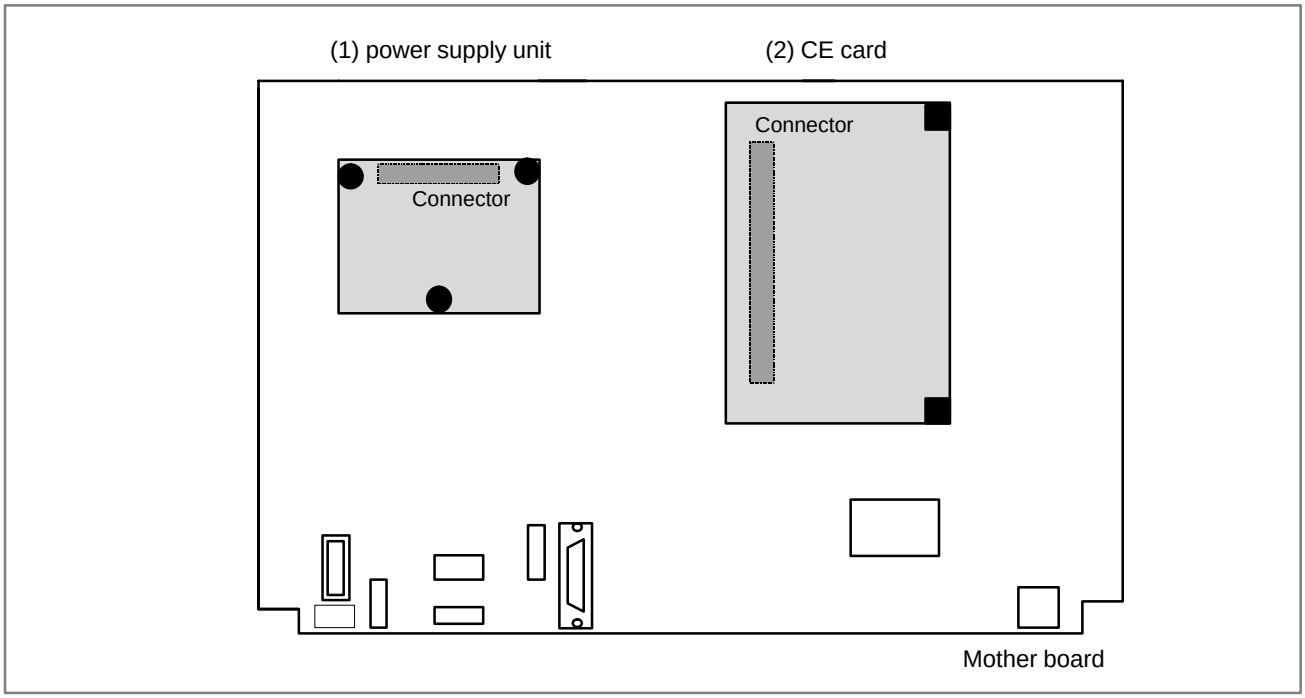

No.	Item		Code	Remarks
(1)	CE card	CE card 1	A20B–3300–0330	10.4” color LCD
		CE card 2	A20B–3300–0320	
(2)	Power supply unit		A20B–8100–0720	

NOTE
1 See Section 3.5, ”CE CARD” for the configuration of the CE card.
2 See Section 3.6.2, ”Installing and Removing the CE Card” for the installation and removal of the CE card.

- **Block diagram**

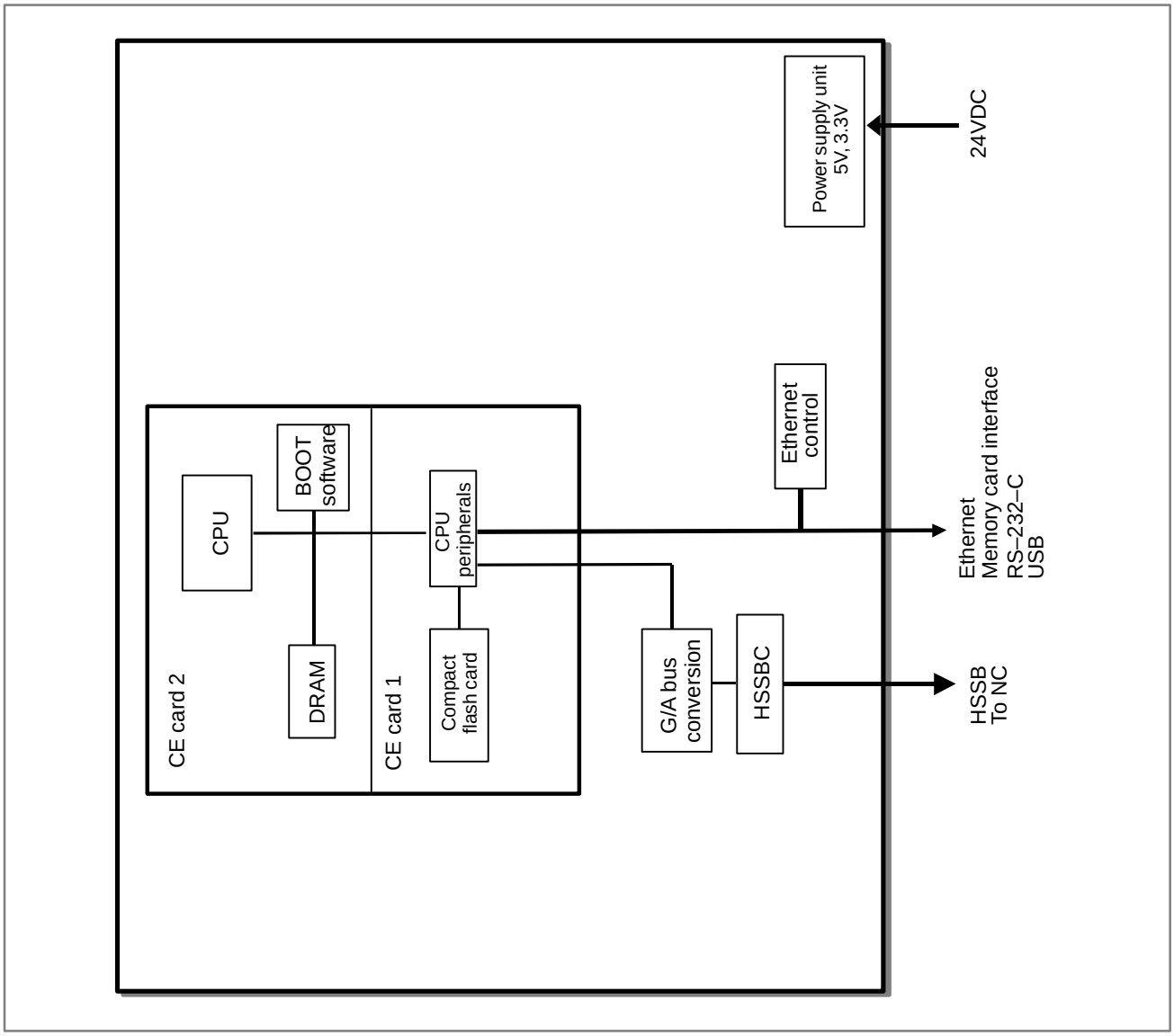

- **LED display**

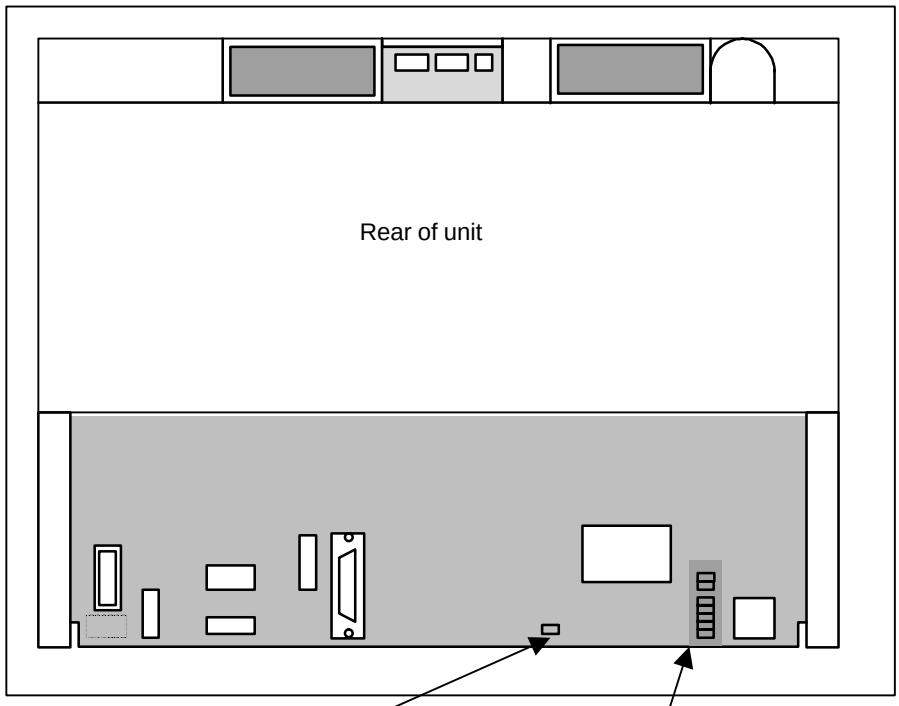

LEDP

Lights when the CE card is powered on (including during backup operation).

Alarm (Red)

Status (Green)

LED1	Lights when the unit failed to communicate with the NC over the HSSB.
LED2	Lights when the unit communicates with the NC over the HSSB.
LED3	RESERVE*
LED4	Flashes while data is being sent or received over the Ethernet on the PC side.
LED5	Lights when a link is established in 100 Mb/s mode over the Ethernet on the PC side.
LED6	RESERVE*
LED7	RESERVE*

For some boards, LED3, LED6, and LED7 are not mounted.

- **Short plug settings**

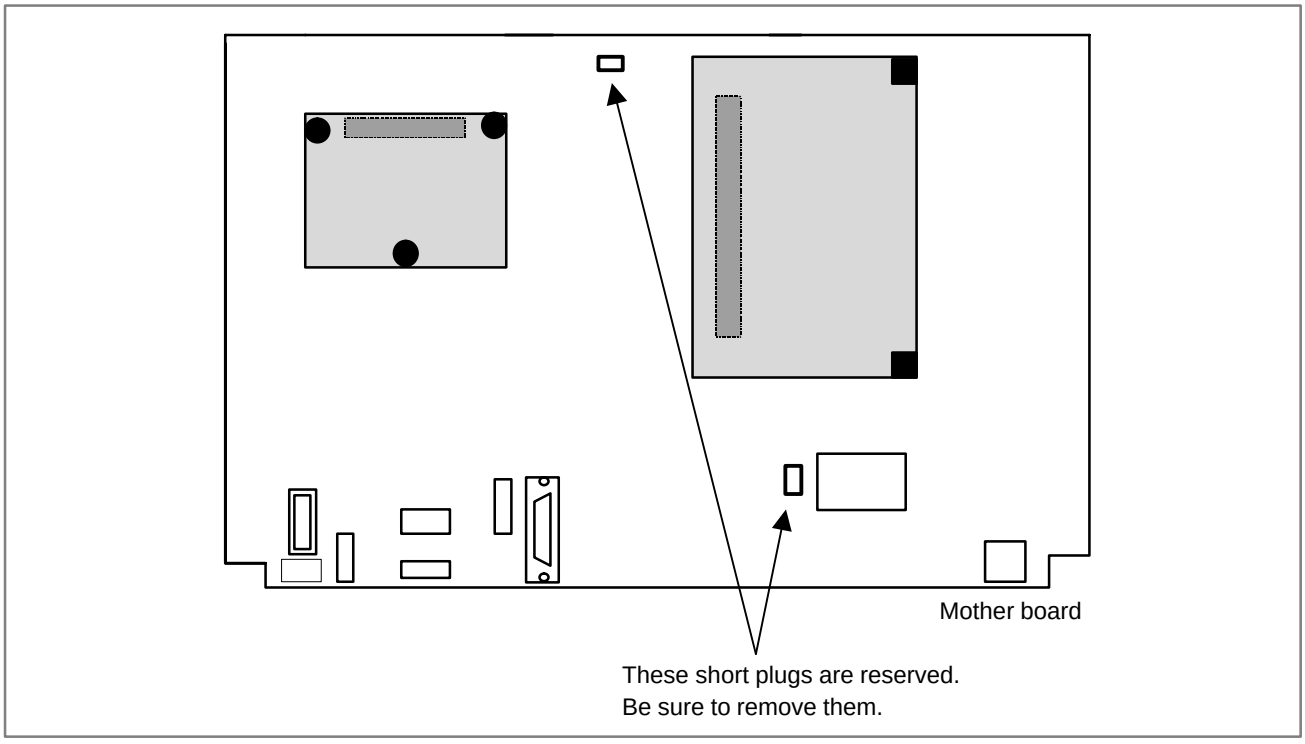

4.5 UNITS AND PRINTED CIRCUIT BOARDS

4.5.1 Basic Units

Type	Item	Drawing No.	Remarks
16*i*/160*i*/160*is*	Basic unit with 1 slot	A02B–0281–B801	
	Basic unit with 3 slots	A02B–0281–B803	
18*i*/180*i*/180*is*	Basic unit with 1 slot	A02B–0283–B801	
		A02B–0297–B801	For 18*i*180*i*/180*is*–MB5
	Basic unit with 3 slots	A02B–0283–B803	
		A02B–0297–B803	For 18*i*/180*i*/180*is*–MB5
21*i*/210*i*/210*is*	Basic unit with 1 slot	A02B–0285–B801	
	Basic unit with 3 slots	A02B–0285–B803	

4.5.2 Printed Circuit Boards of Control Unit

Type	Item	Drawing No.	ID	Remarks
Master PCB	Main CPU board	A16B–3200–0420	3X0C	16*i*/160*i*/160*is*
		A16B–3200–0421	3X0D	18*i*/180*i*/180*is*
		A16B–3200–0425	3X0E	21*i*/210*i*/210*is*
Card PCB	CPU card	A20B–3300–0310	CPU: 11 DRAM: A9	16*i*/18*i*/160*i*/180*i*/160*is*/180*is*
		A20B–3300–0311	CPU: 11 DRAM: AA	16*i*/18*i*/160*i*/180*i*/160*is*/180*is*
		A20B–3300–0312	CPU: 11 DRAM: A9	21*i*/210*i*/210*is* When the embedded Ethernet is used
		A20B–3300–0313	CPU: 11 DRAM: AA	
		A20B–3300–0290	CPU: 09 DRAM: 8A	21*i*/210*i*/210*is*
		A20B–3300–0291	CPU: 09 DRAM: 89	21*i*/210*i*/210*is*
		A20B–3300–0102	0A	RISC board
		A17B–3300–0400	0A	

Type	Item		Drawing No.	ID	Remarks
Card PCB	Display control card	LCD/MDI	A20B–3300–0340	–	
		For CRT LINK	A20B–3300–0360	–	
		MDI only	A20B–3300–0362	–	
		No display	A20B–3300–0364	–	
		LCD/MDI	A20B–3300–0341	–	21*i*/210*i*/210*is* When the embedded Ethernet is not used
		For CRT LINK	A20B–3300–0361	–	
		MDI only	A20B–3300–0363	–	
	Axis control card	2 axes	A20B–3300–0033	00	Servo software Series 9090, 21*i*/ 210*i*/210*is*, Loader control
		4 axes	A20B–3300–0032	01	
		2 axes	A20B–3300–0243	08	Servo software Series 90B0
		4 axes	A20B–3300–0242	08	
		6 axes	A20B–3300–0241	08	
		8 axes	A20B–3300–0240	08	
		4 axes, High–speed HRV	A20B–3300–0248	08	Servo software Series 90B0
		6 axes, High–speed HRV	A20B–3300–0245	08	
		8 axes, High–speed HRV	A20B–3300–0244	08	
		Learning controlled axis control	A20B–3300–0246	08	Servo software Series 90B3/90B7
		Learning controlled axis control, High–speed HRV	A20B–3300–0247	08	
	Display control card (LCD unit side)	10.4″ color	A20B–3300–0280	–	Graphic
		9.5″ monochrome	A20B–3300–0282	–	Graphic
		9.5″ monochrome	A20B–3300–0302	–	Character only
Power supply unit	Power supply unit		A02B–8100–0851	–	

Type	Item	Drawing No.	ID	Remarks
DIMM module	FROM/SRAM module	A20B–3900–0160	FROM: C1 SRAM: 03	FROM 16MB, SRAM 1MB
		A20B–3900–0161	FROM: C1 SRAM: 04	FROM 16MB, SRAM 2MB
		A20B–3900–0162	FROM: C1 SRAM: 05	FROM 16MB, SRAM 3MB
		A20B–3900–0163	FROM: C2 SRAM: 03	FROM 32MB, SRAM 1MB
		A20B–3900–0164	FROM: C2 SRAM: 04	FROM 32MB, SRAM 2MB
		A20B–3900–0165	FROM: C2 SRAM: 05	FROM 32MB, SRAM 3MB
		A20B–3900–0180	FROM: C1 SRAM: 01	FROM 16MB, SRAM 256kB
		A20B–3900–0181	FROM: C1 SRAM: 02	FROM 16MB, SRAM 512kB
		A20B–3900–0182	FROM: C2 SRAM: 01	FROM 32MB, SRAM 256kB
		A20B–3900–0183	FROM: C2 SRAM: 02	FROM 32MB, SRAM 512kB
	Analog spindle module	A20B–3900–0170		

Type	Item	Drawing No.	ID	Remarks
Option PCB	Sub–CPU board	A16B–2203–0751	1xC0	
	Loader control board	A16B–2203–0740	1x97	
	RISC + data server board	A16B–3200–0390	0x81 3xF5	
	RISC board	A16B–3200–0391	0x81	
	Data server board	A16B–3200–0352	3xF5	
	ATA card adapter	A20B–2100–0500	–	For data server
	Serial communication board (RB/DNC2, CRS232C I/F)	A20B–8100–0334	1xE1	
	Serial communication board (RB/DNC2, CRS422 I/F)	A20B–8100–0335	2xE1	
	Serial communication board (DNC1)	A20B–8100–0336	3xE2	
	C board	A20B–8100–0330	xxE0	
	HSSB interface board	A20B–8001–0730	xxAA	
	Symbol CAP*i* T board	A20B–8100–0560	xx1F	
	I/O Link–II board	A20B–8100–0381	xxF9	
	Ethernet board	A20B–8100–0450	xxE6	
	DeviceNet board	A20B–8100–0491	xxEF	
	DeviceNet board C	A20B–8100–0650		
	PROFIBUS Master board	A20B–8100–0470	xxFC	
	PROFIBUS Slave board	A20B–8100–0440	xxE3	
	FL–net board	A20B–8100–0530	xx59	
Back panel	Back panel	A20B–2003–0270	–	1 slot
		A20B–2003–0280	–	3 slots

Type	Item		Drawing No.	ID	Remarks
Distributed I/O	Operator's panel I/O module		A20B–2002–0470	–	Matrix DI supported With MPG interface
			A20B–2002–0520	–	General–purpose DI input With MPG interface
			A20B–2002–0521	–	General–purpose DI input Without MPG inter–face
	Connector panel I/O module	Basic	A20B–2100–0150	–	
		Expansion	A20B–2100–0410	–	With MPG interface
			A20B–2100–0411	–	Without MPG inter-face
			A20B–2100–0320	–	DO only
			A20B–2100–0190	–	Analog input
Others	LCD control printed circuit board		A20B–8100–0820	–	
	Inverter		A20B–8001–0920	–	Color
			A20B–8100–0710	–	Monochrome
	Operator's panel connection unit	(64/32)	A16B–2200–0661	–	Sink output
		(96/64)	A16B–2200–0660	–	Sink output
		(64/32)	A16B–2202–0731	–	Source output
		(96/64)	A16B–2202–0730	–	Source output
	Machine operator's panel interface unit		A16B–2201–0110	–	
	Touch panel control board		A20B–8001–0620	–	
	PCB for separate detector interface unit		A20B–2100–0270	–	
	HSSB board on the personal computer side		A20B–8001–0583	–	For 1 channel, corre-sponding to ISA–bus
			A20B–8001–0582	–	For 2 channels, cor-responding to ISA–bus
			A20B–8001–0960	–	For 2 channels, cor-responding to PCI–bus
			A20B–8001–0961	–	For 1 channel, corre-sponding to PCI–bus

4.5.3 LCD/MDI Unit

Item			Drawing No.	Remarks
9.5″ monochrome LCD unit			A02B–0281–C061	
9.5″ monochrome LCD unit			A02B–0281–C066	Character only
10.4″ color LCD unit			A02B–0281–C071	
10.4″ color LCD unit			A02B–0281–C081	With touch panel
For display link	7.2″ monochrome LCD unit		A02B–0166–C251	
	7.2″ monochrome LCD/MDI unit	T series	A02B–0166–C261#TR	Alphabetic keys
			A02B–0166–C261#TS	Symbolic keys
		M series	A02B–0166–C261#R	Alphabetic keys
			A02B–0166–C261#S	Symbolic keys
	Detachable 7.2″ monochrome LCD/MDI unit	T series	A02B–0166–C271#TR	Alphabetic keys
			A02B–0166–C271#TS	Symbolic keys
		M series	A02B–0166–C271#R	Alphabetic keys
			A02B–0166–C271#S	Symbolic keys
	Stand–alone type MDI	T series	A02B–0166–C210#TR	Alphabetic keys
			A02B–0166–C210#TS	Symbolic keys
		M series	A02B–0166–C210#R	Alphabetic keys
			A02B–0166–C210#S	Symbolic keys
Stand–alone type MDI standard key (horizontal type) 220x230mm		T series	A02B–0281–C125#TBR	Alphabetic keys
			A02B–0281–C125#TBS	Symbolic keys
		M series	A02B–0281–C125#MBR	Alphabetic keys
			A02B–0281–C125#MBS	Symbolic keys
Stand–alone type MDI standard key (vertical type) 220x290mm		T series	A02B–0281–C126#TBR	Alphabetic keys
			A02B–0281–C126#TBS	Symbolic keys
		T series	A02B–0281–C126#MBR	Alphabetic keys
			A02B–0281–C126#MBS	Symbolic keys
61 full–keyboard (horizontal type) 220x230mm			A02B–0261–C162#MCR	Alphabetic keys
			A02B–0261–C162#MCS	Symbolic keys
61 full–keyboard (vertical type) 220x290mm			A02B–0261–C161#MCR	Alphabetic keys
			A02B–0261–C161#MCS	Symbolic keys

Item	Drawing No.	Remarks
CAP*i* T keyboard (horizontal type) 220x230mm	A02B–0281–C125#TFBR	Alphabetic keys
	A02B–0281–C125#TFBS	Symbolic keys
CAP*i* T keyboard (vertical type) 220x290mm	A02B–0281–C126#TFBR	Alphabetic keys
	A02B–0281–C126#TFBS	Symbolic keys

4.5.4 Other Units

Item		Drawing No.	Remarks
Separate detector interface unit	4 basic axes	A02B–0236–C203	
	4 additional axes	A02B–0236–C204	
Connector panel I/O module	Basic module	A03B–0815–C001	
	Expansion module	A03B–0815–C002	With MPG interface
		A03B–0815–C003	Without MPG interface
		A03B–0815–C004	2A DO
		A03B–0815–C005	Analog input
Distributed I/O machine operator’s panel	Compact type	A02B–0236–C141#xx	DI = 24, with MGP interface
	Standard type	A02B–0236–C140#xx	DI = 24, with MGP interface
	290–mm wide	A02B–0236–C150#xx	DI = 24, with MGP interface
Spindle connection adapter		A13B–0180–B001	
Fan unit	For 1 slot	A02B–0265–C101	
	For 2 slots	A02B–0260–C021	

4.5.5 CNC Display Unit with PC Functions and PANEL *i*

Type	Item			Drawing No.
Printed circuit board for CNC display unit with PC functions and PANEL *i*	Main printed circuit board (For basic unit A08B–0082–B001 to –B004, –B011 to –B014, –B021 to –B024)	For Windows95	For 10.4”/12.1” LCD	A20B–2100–0690
			For 15.0” LCD	A20B–2100–0691
		For OS except for Windows95	For 10.4”/12.1” LCD	A20B–2100–0692
			For 15.0” LCD	A20B–2100–0693
	Main printed circuit board (For basic unit A08B–0082–B031 to –B038, –B041 to –B048, –B051 to –B057) (For basic unit A13B–0193– B031 to –B038, –B041 to –B048, –B051 to –B057)	For OS except for Windows95	For 10.4”LCD	A20B–2100–0780
			For 12.1”LCD	A20B–2100–0781
			For 15.0”LCD	A20B–2100–0782
		For Windows95	For 10.4”LCD	A20B–2100–0783
			For 12.1”LCD	A20B–2100–0784
			For 15.0”LCD	A20B–2100–0785
	Inverter printed circuit board (For basic unit A08B–0082–B001 to –B004, –B011 to –B014, –B021 to –B024)	For 10.4” LCD		A14L–0132–0001
		For 12.1” LCD		A20B–2002–0890
		For 15.0” LCD		A14L–0143–0002
	Inverter printed circuit board (For basic unit A08B–0082– B031 to –B038, –B041 to –B048, –B051 to –B057) (For basic unit A13B–0193– B031 to –B038, –B041 to –B048, –B051 to –B057)	For 10.4” LCD		A14L–0132–0001#B
		For 12.1” LCD		A14L–0143–0001#B
		For 15.0” LCD		A14L–0143–0002#B
	Soft key printed circuit board	For 10.4” LCD		A86L–0001–0261
		For 12.1” LCD		A20B–1007–0760
	Printed circuit board for touch panel controller			A20B–8001–0620

Type	Item				Drawing number of unit for maintenance	Main drawing number (Basic unit)
Printed circuit board for CNC display unit with PC functions and PANEL *i*	Base unit	LCD	Soft key	Touch panel		
		10.4" LCD	×	×	A08B–0082–D001	A08B–0082–B001
			○	×	A08B–0082–D002	A08B–0082–B002
			×	○	A08B–0082–D003	A08B–0082–B003
			○	○	A08B–0082–D004	A08B–0082–B004
		12.1"LCD	×	×	A08B–0082–D011	A08B–0082–B011
			○	×	A08B–0082–D012	A08B–0082–B012
			×	○	A08B–0082–D013	A08B–0082–B013
			○	○	A08B–0082–D014	A08B–0082–B014
		15.0"LCD	×	×	A08B–0082–D021	A08B–0082–B021
			×	○	A08B–0082–D023	A08B–0082–B023
		10.4"LCD	×	×	A08B–0082–D031	A08B–0082–B031 A08B–0082–B035 A13B–0193–B031 A13B–0193–B035
			○	×	A08B–0082–D032	A08B–0082–B032 A08B–0082–B036 A13B–0193–B032 A13B–0193–B036
			×	○	A08B–0082–D033	A08B–0082–B033 A08B–0082–B037 A13B–0193–B033 A13B–0193–B037
			○	○	A08B–0082–D034	A08B–0082–B034 A08B–0082–B038 A13B–0193–B034 A13B–0193–B038
		12.1"LCD	×	×	A08B–0082–D041	A08B–0082–B041 A08B–0082–B045 A13B–0193–B041 A13B–0193–B045
			○	×	A08B–0082–D042	A08B–0082–B042 A08B–0082–B046 A13B–0193–B042 A13B–0193–B046
			×	○	A08B–0082–D043	A08B–0082–B043 A08B–0082–B047 A13B–0193–B043 A13B–0193–B047
			○	○	A08B–0082–D044	A08B–0082–B044 A08B–0082–B048 A13B–0193–B044 A13B–0193–B048
		15.0"LCD	×	×	A08B–0082–D051	A08B–0082–B051 A08B–0082–B055 A13B–0193–B051 A13B–0193–B055
			×	○	A08B–0082–D053	A08B–0082–B053 A08B–0082–B057 A13B–0193–B053 A13B–0193–B057
	3.5" HDD unit (including the FAN for HDD)				A08B–0082–C100	A08B–0082–H100

○: Provided ×: None

NOTE
The base unit for maintenance consists of the components of the basic unit from which the main printed circuit board and its retaining screws are excluded.

Type	Item			Drawing number for maintenance	Main drawing number
Printed circuit board for PC function of CNC display unit with PC functions and PANEL *i*	PC card	MMX–Pentium 233MHz	For 10.4" LCD	A08B–0082–H500#6141	A08B–0082–H010
			For 12.1" LCD	A08B–0082–H500#6142	A08B–0082–H011
			For 15.0" LCD	A08B–0082–H500#6143	A08B–0082–H012
		PentiumII 333MHz	For 10.4" LCD	A08B–0082–H511#6138	A08B–0082–H020
			For 12.1" LCD	A08B–0082–H511#6139	A08B–0082–H021
			For 15.0" LCD	A08B–0082–H511#6140	A08B–0082–H022
		Celeron 400MHz	For 10.4" LCD	A08B–0082–H512#613D	A08B–0082–H040
			For 12.1" LCD	A08B–0082–H512#613E	A08B–0082–H041
			For 15.0" LCD	A08B–0082–H512#613F	A08B–0082–H042
		PentiumIII 500MHz	For 10.4" LCD	A08B–0082–H520#613G	A08B–0082–H050
			For 12.1" LCD	A08B–0082–H520#613H	A08B–0082–H051
			For 15.0" LCD	A08B–0082–H520#613J	A08B–0082–H052
Memory	Main memory (For MMX–Pentium 233MHz and PentiumII 333MHz)		DRAM 32MB (*)	A76L–0500–0013 (Specification: TOSHIBA THL64V4075BTG–5S)	A08B–0082–H001
			DRAM 64MB	A76L–0500–0014 (Specification: TOSHIBA THL64V8015BTG–5S)	A08B–0082–H002
			DRAM 128MB	A76L–0500–0017 (Specification: PFU PD–2261ADS)	A08B–0082–H003
	Main memory (For Celeron 400MHz and PentiumIII 500MHz)		SDRAM 64M	A76L–0500–0018 (Specification: PFU PD–2261ACS)	A08B–0082–H004
			SDRAM 128M	A76L–0500–0019 (Specification: PFU PD–2261ADSA)	A08B–0082–H005

*: DRAM 32 MB can be used only for the MMX–Pentium 233MHz.

4.5.6 CNC Display Unit for *i*s series CNC

Printed circuit boards

Name		Drawing number
Motherboard		A20B–8100–0800
CE card	CE card 1	A20B–3300–0330
	CE card 2	A20B–3300–0320
Power supply unit		A20B–8100–0720
Printed circuit board of Inverter		A20B–8001–0920
Printed circuit board of backup unit		A20B–2100–0820

Units

Name			Drawing number
10.4” LCD unit	Soft keys	Touch panel	
	○	×	A02B–0281–D500
	×	○	A02B–0281–D501
	○	○	A02B–0281–D508
FA full–keyboard			A02B–0281–C130#E

Others

Name		Drawing number
Case		A02B–0236–D100#0C
Compact flash card	32MB	A87L–0001–0173#32MBA
	48MB	A87L–0001–0173#48MBA
	64MB	A87L–0001–0173#64MB
	96MB	A87L–0001–0173#96MB
Cable for backup unit		A02B–0281–K801
Cable for FA full–keyboard		A02B–0281–K802

4.6 MOUNTING AND REMOVING AN OPTION BOARD

WARNING
The replacement described here should be performed by a person fully trained in maintenance and safety. If the cabinet is opened to replace the option board, take extreme care not to touch any high–voltage area (marked with ⚠ and covered by a shock prevention cover). If the area is uncovered, direct contact with this area will result in an electric shock.

NOTE
Before starting the replacement, take a back–up copy of the contents (parameters, programs, etc.) of the SRAM memory of the CNC. The backup copy can be used in case the contents of the SRAM memory are lost during the replacement.

4.6.1 Mounting and Removing the Main CPU Board and a Full–Size Option Board

4.6.1.1 Removing the board

(1) Remove cables other than the battery cable. (The battery cable is connected only to the main CPU board.)
(2) Hold handles A and B.
(3) Pushing down the hook of handle A and pushing up the hook of handle B, pull out the printed circuit board.

NOTE
1 The battery is mounted on the face place of the main CPU board. The battery is pulled out together with the main CPU board.
2 The main CPU board or a full–size option board can be removed without removing mini–slot option boards. (If a cable connected to a mini–slot option board obstructs the removal, the cable must be removed.)

4.6.1.2 Mounting the board

(1) Holding handles A and B, insert the board into the cabinet until the connector on the back panel is connected.

(2) Connect the removed cables to correct positions.

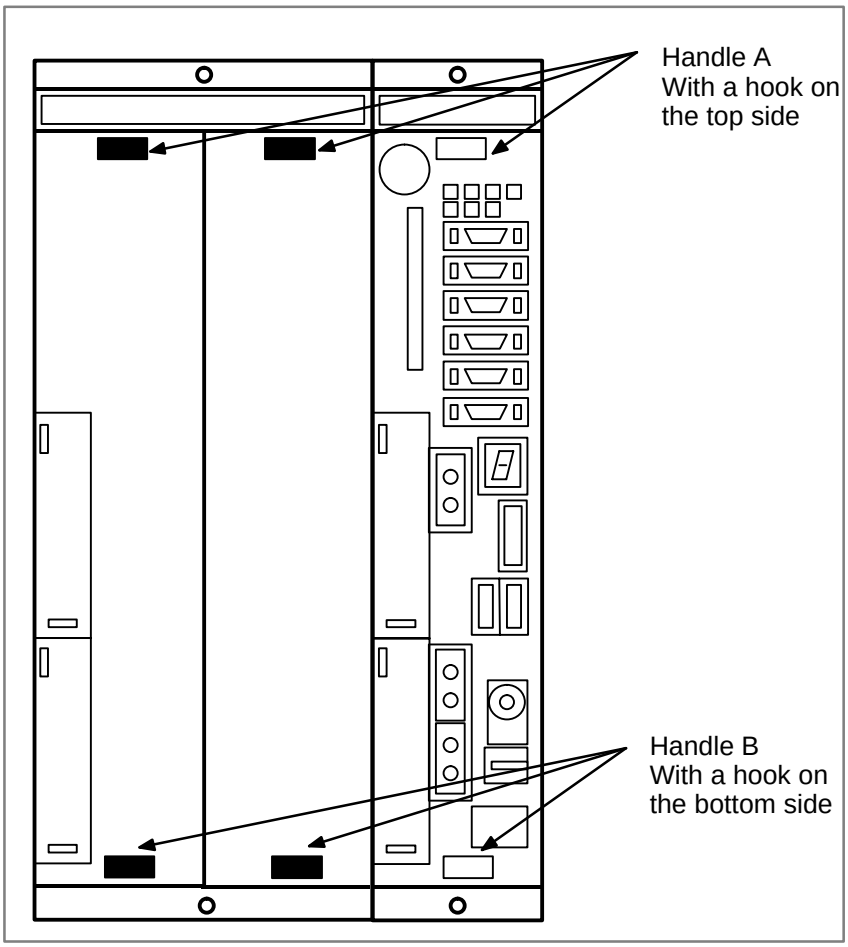

4.6.2 Mounting and Removing a Mini–Slot Option Board (Except DeviceNet Board)

4.6.2.1 Removing the board

(1) Remove cables connected to the target mini–slot option board. Remove other cables that would obstruct the removal of the mini–slot option board.

(2) Hold handles C and D.

(3) Pushing the latch of handle C to the right, pull out the printed circuit board.

NOTE
The mini–slot option board can be removed without removing the main CPU option board or full–size option board.

4.6.2.2 Mounting the board

(1) Holding handles C and D, insert the board into the cabinet until the connector on the back panel is connected.

(2) Connect the removed cables to correct positions.

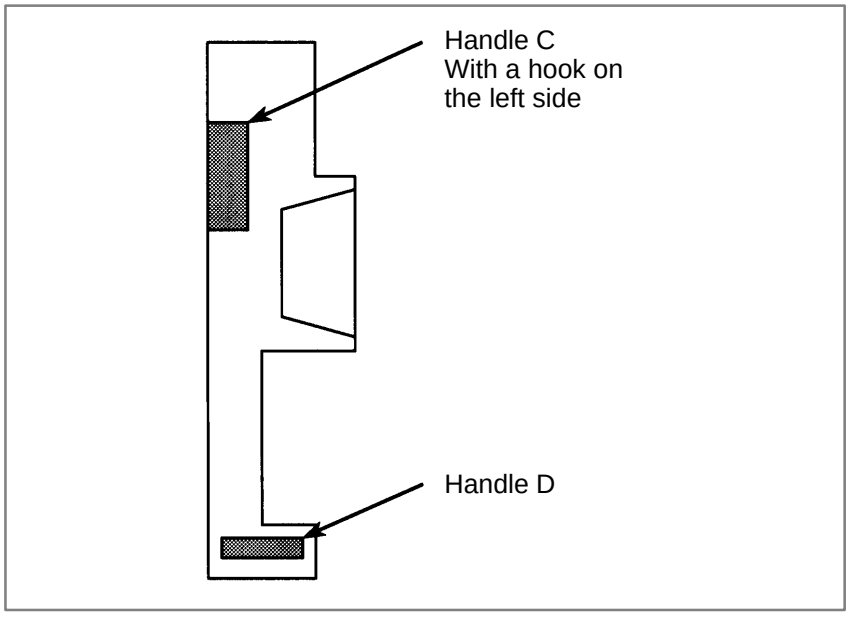

4.6.3 Mounting and Removing the DeviceNet Board

4.6.3.1 Removing the board

(1) Remove the terminal block from the connector on the DeviceNet board. The terminal block can be pulled out after the screws on both sides are loosened. The terminal block can be removed with cables connected.

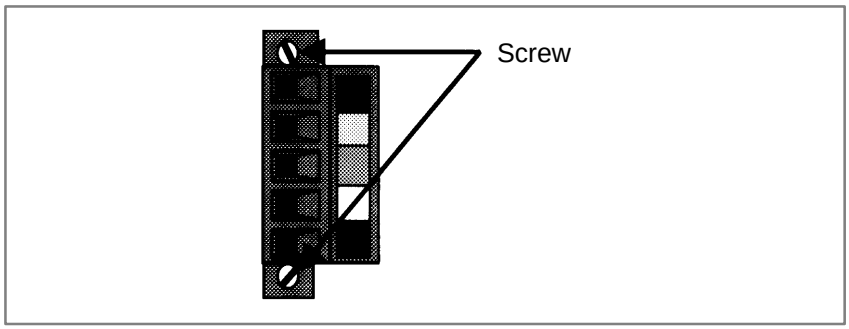

(2) Remove the main CPU board. The main CPU board can be removed after the terminal block of the DeviceNet connector is removed.

(3) Hold handles C and D of the DeviceNet board. Pushing the latch of handle C to the right, pull out the board.

NOTE
The DeviceNet board can be removed after the main CPU board is removed. If an attempt is made to pull out the DeviceNet board without removing the main CPU board, the printed board may be damaged.

4.6.3.2 Mounting the board

(1) Before mounting the DeviceNet board, remove the main CPU board.

NOTE
The DeviceNet board can be mounted after the main CPU board is removed. If an attempt is made to mount the DeviceNet board without removing the main CPU board, the printed circuit may be damaged.

(2) Remove the terminal block from the connector on the DeviceNet board. (See the removal procedure described above.)

(3) Mount the DeviceNet board in the cabinet without the main CPU board. Holding handles C and D, insert the board into the cabinet until the connector on the back panel is connected.

(4) After mounting the DeviceNet board, mount the main CPU board.

(5) Mount the terminal block removed in (2) to the connector. Securely tighten the screws.

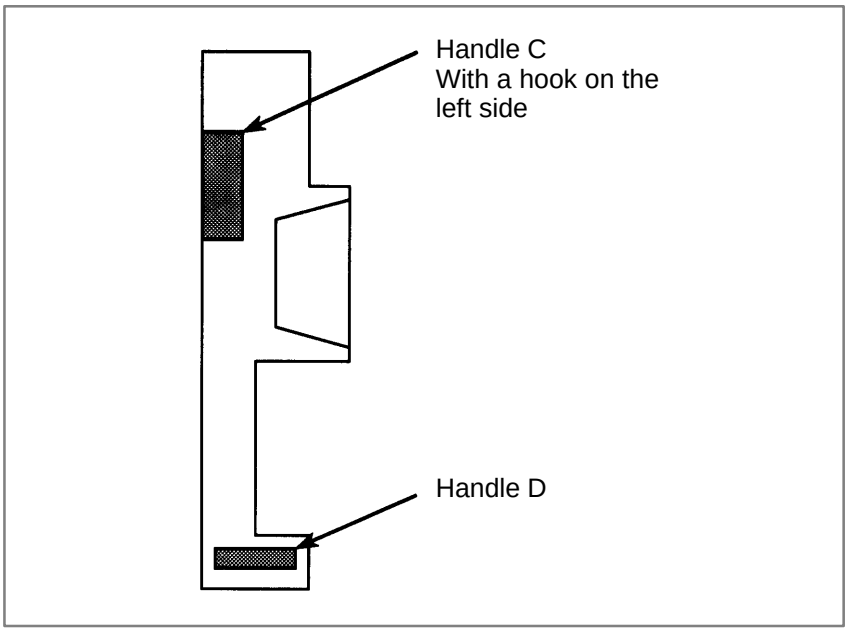
Handle C
With a hook on the
left side
Handle D

4.7 MOUNTING AND REMOVING THE BACK PANEL

WARNING

The replacement described here should be performed by a person fully trained in maintenance and safety. If the cabinet is opened to replace the back panel, take extreme care not to touch any high–voltage area (marked with ⚠ and covered by a shock prevention cover). If the area is uncovered, direct contact with this area will result in an electric shock.

NOTE

Before starting the replacement, take a back–up copy of the contents (parameters, programs, etc.) of the SRAM memory of the CNC. The backup copy can be used in case the contents of the SRAM memory are lost during the replacement.

4.7.1 Removing the Panel

(1) Remove the main CPU board and all option boards, following the steps described in Section 3.6.

(2) Remove the connector of the fan connected to the back panel.

(3) Push down the latch securing the back panel until the latch is disengaged.

(4) Pull down and detach the back panel to the rear.

4.7.2 Mounting the Back Panel

(1) Aligning the positioning hole of the back panel with the positioning pin, fit the back panel on from the rear.

(2) Pull up the back panel until the latch is engaged.

(3) Connect the fan connector to the back panel.

(4) Mount the main CPU board and option boards, following the steps described in Section 3.6.

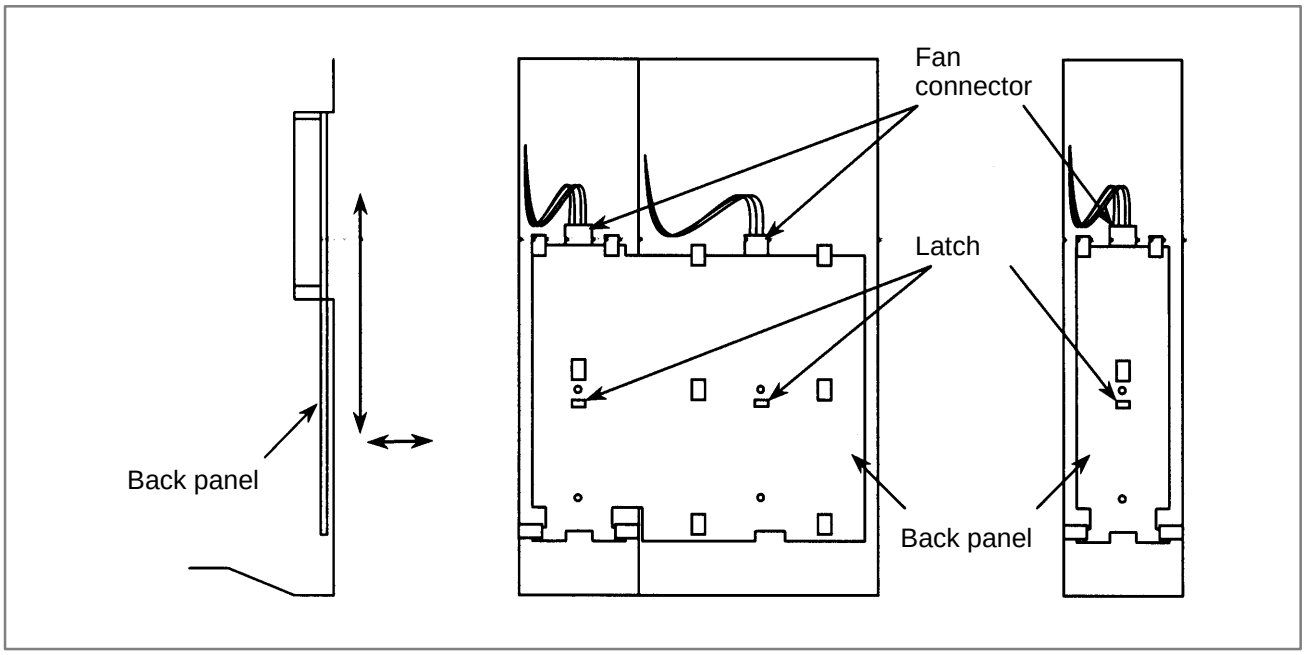
Fan
connector
Latch
Back panel
Back panel

4.8 REPLACING THE FUSE OF THE CONTROL UNIT

WARNING

Before starting the replacement of a fuse, remove the cause of the fuse burn–out.
Accordingly, the replacement should be performed by a person fully trained in maintenance and safety. If the cabinet is opened to replace the fuse, take extreme care not to touch any high–voltage area (marked with ⚠ and covered by a shock prevention cover). If the area is uncovered, direct contact with this area will result in an electric shock.

- **Mounting position of the fuse of the control unit**

The fuse of the control unit is mounted on the main CPU board.

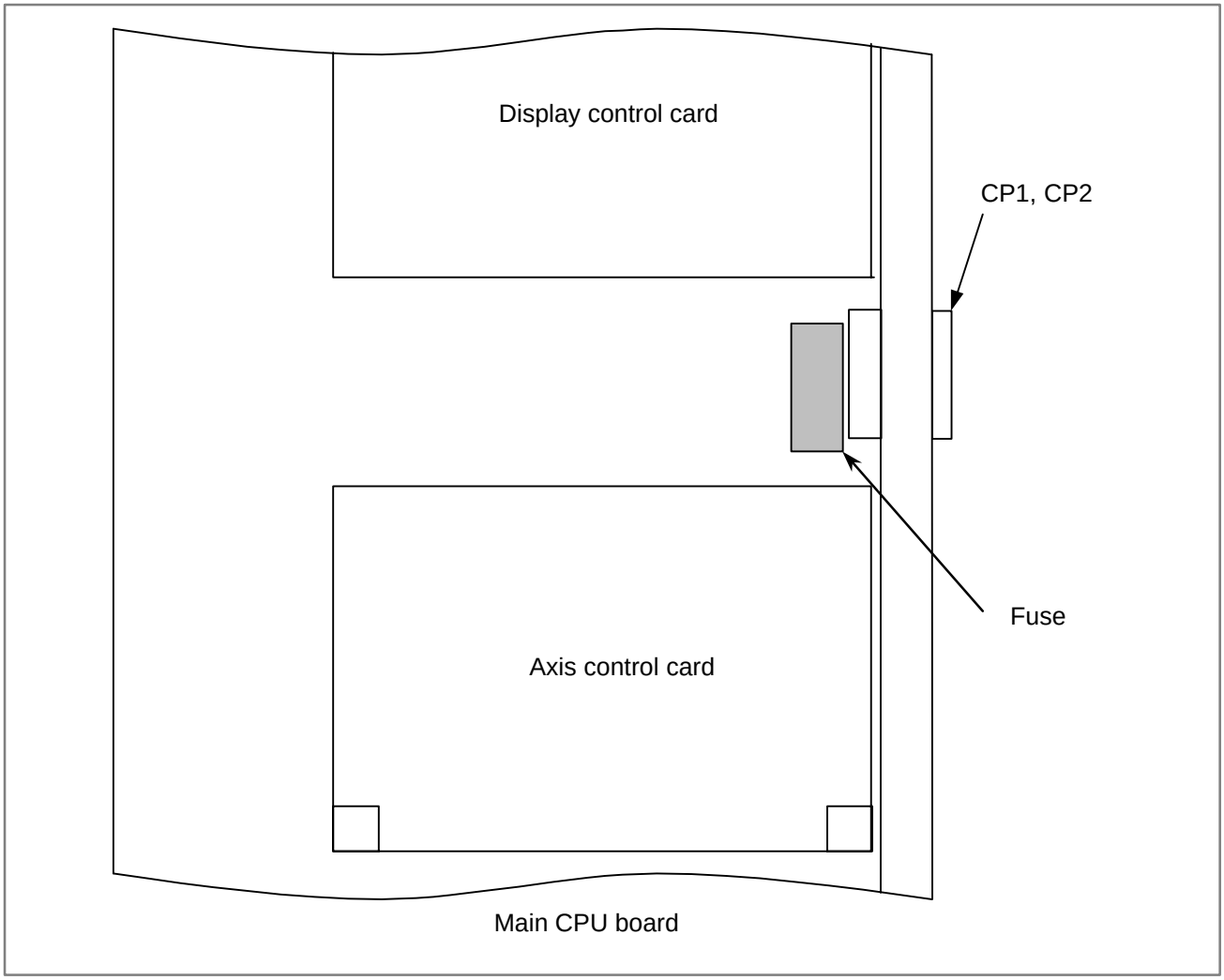

- **Ordering information of the fuse**

Ordering information	Rating	Individual information
A02B–0265–K100	7.5A	A60L–0001–0046#7.5

4.9 REPLACING THE BATTERY

Part programs, offset data, and system parameters are stored in CMOS memory in the control unit. The power to the CMOS memory is backed up by a lithium battery mounted on the front panel of the control unit. The above data is not lost even when the main battery goes dead. The backup battery is mounted on the control unit at shipping. This battery can maintain the contents of memory for about a year.

When the voltage of the battery becomes low, alarm message “BAT” blinks on the display and the battery alarm signal is output to the PMC. When this alarm is displayed, replace the battery as soon as possible. In general, the battery can be replaced within two or three weeks, however, this depends on the system configuration.

If the voltage of the battery becomes any lower, memory can no longer be backed up. Turning on the power to the control unit in this state causes system alarm 910 (SRAM parity alarm) or 935 (SRAM ECC error) to occur because the contents of memory are lost. Clear the entire memory and reenter data after replacing the battery.

The following two kinds of batteries can be used.

- Lithium battery built into the CNC control unit.
- Two alkaline dry cells (size D) in the external battery case.

NOTE
A lithium battery is installed as standard at the factory.

- **Replacing the battery**

If a lithium battery is used, have A02B–0200–K102 (FANUC internal code: A98L–0031–0012) handy.

(1) Turn the CNC on. About 30 seconds later, turn the CNC off.

(2) Remove the battery from the top area of the CNC unit.
Disconnect the connector first. Then, remove the battery from the battery case.
The battery case is provided in the top area of the face plate of the main CPU board.

(3) Replace the battery, then connect the connector.

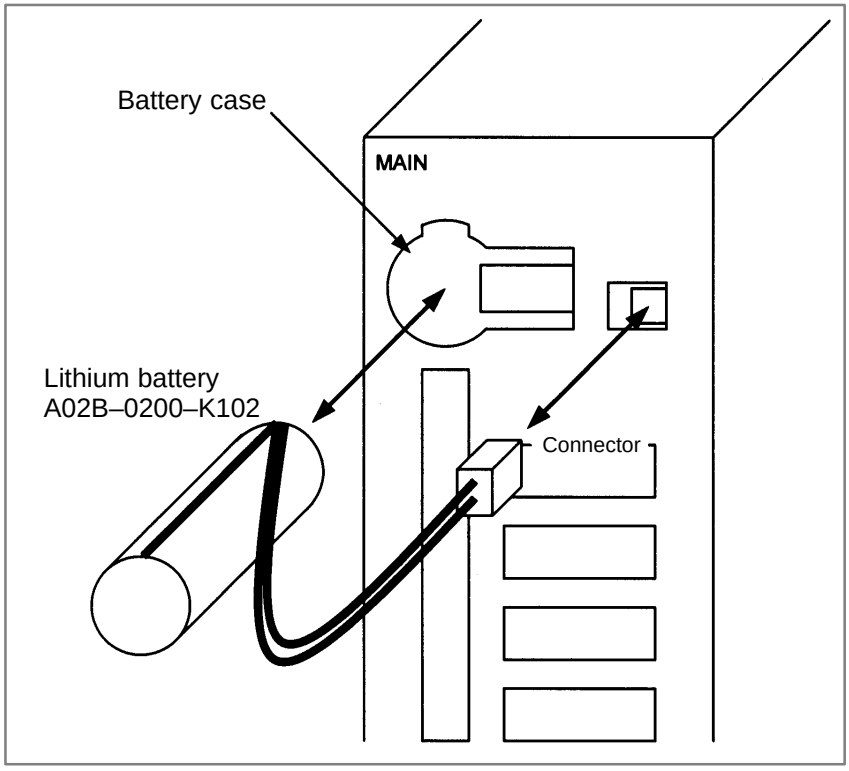

WARNING
The incorrect mounting of the battery may cause an explosion. Avoid using any battery other than the one specified here (A02B–0200–K102).

CAUTION
Complete steps (1) to (3) within 30 minutes.
If the battery is left removed for a long time, the memory would lose the contents.
If there is a danger that the replacement cannot be completed within 30 minutes, save the whole contents of the CMOS memory to a memory card. The contents of the memory can be easily restored with the memory card in case the memory loses the contents.

Discard the dead battery, observing appropriate municipal rules and regulations. When discarding the battery, insulate the terminal with a tape so that no short–circuit would occur.

When using commercial D–size alkaline dry cells

- **General method**

Use the connector connected to the lithium battery for an external battery. Following the battery replacement procedure described above, replace the standard lithium battery with an external battery in a battery case (A02B–0236–C281).

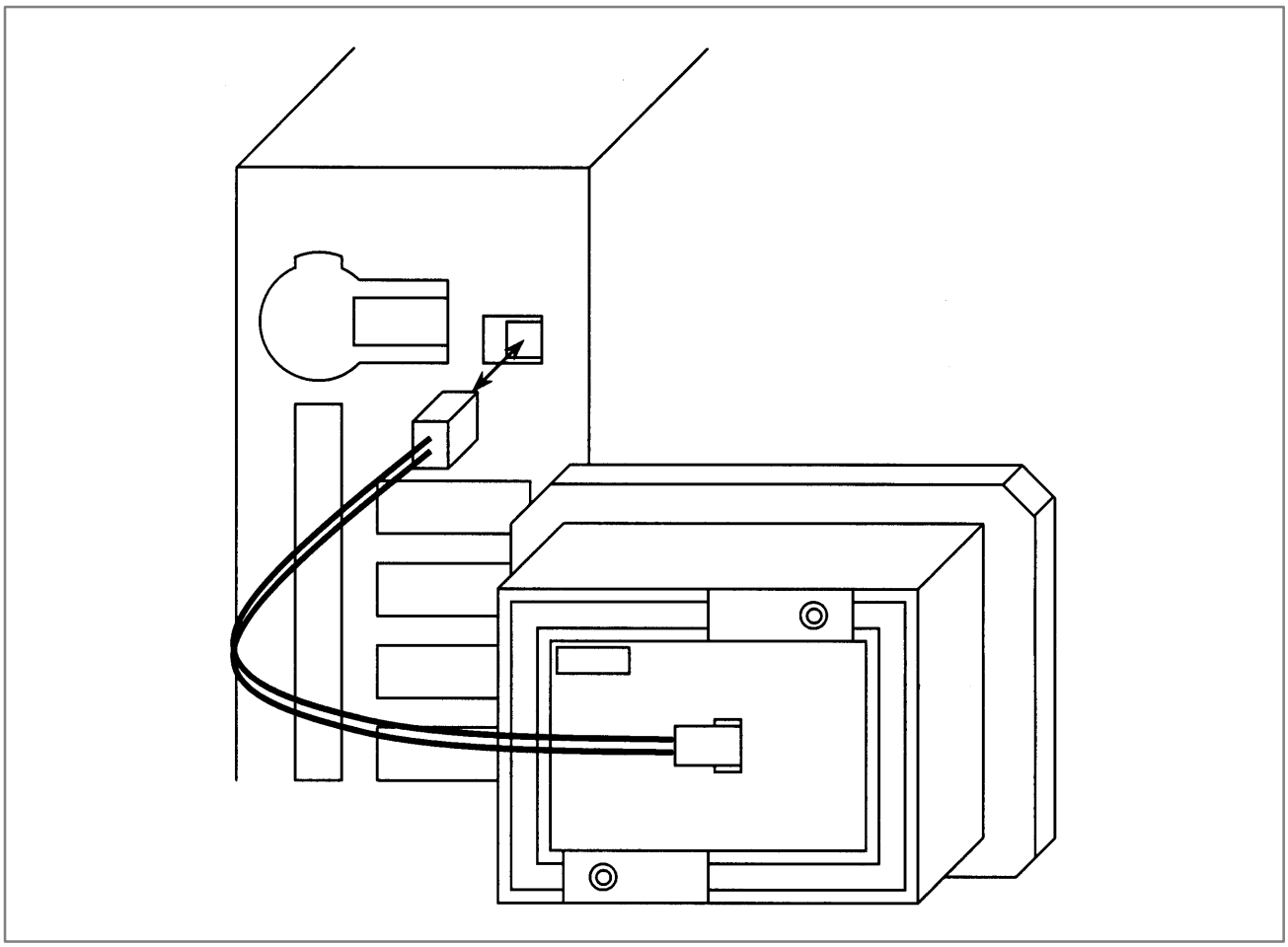

CAUTION
1 Place the battery case (A02B–0236–C281) in such a position that the battery can be replaced even while the control unit is active.
2 The connector of the battery cable uses a simple lock system. Fix the cable within an area of 50 cm from the connector, removing tension on the cable. This is required to prevent the connector from coming off because of the weight of the cable or tension on the cable.

- **Replacing the battery**

(1) Have commercial D–size alkaline dry cells handy.
(2) Turn the CNC on.
(3) Remove the lid from the battery case.
(4) Replace the old dry cells with new ones. Mount the dry cells in a correct orientation.
(5) Replace the lid on the battery case.

CAUTION
In the power–off state, the battery should be replaced as in the case of the lithium battery, which is descried above.

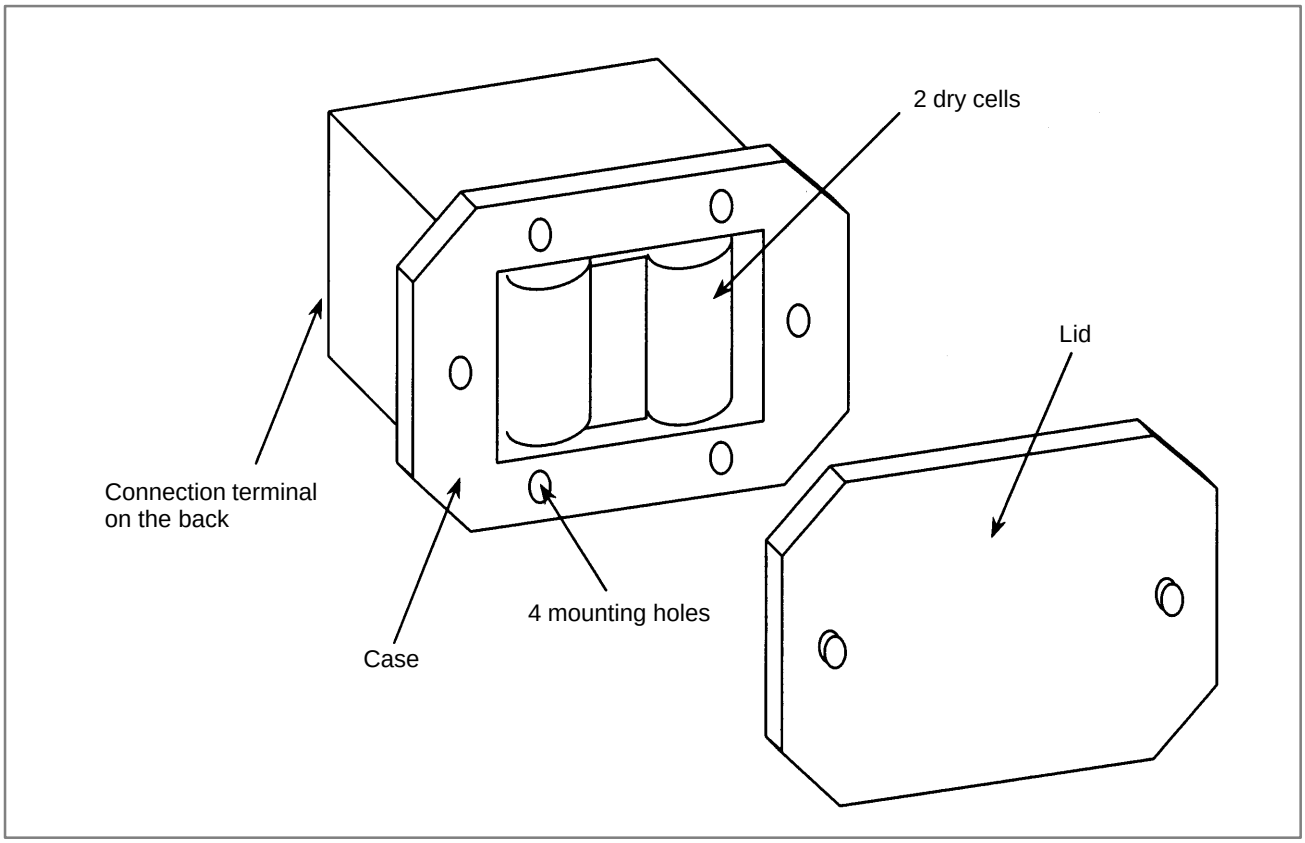

4.10 REPLACING A FAN UNIT

WARNING
If the cabinet is opened to replace a fan unit, take extreme care not to touch any high–voltage area (marked with ⚠ and covered by a shock prevention cover). If the area is uncovered, direct contact with this area will result in an electric shock.

- **Ordering information of fan units**

	Ordering information	Quantity
For 1–slot cabinet	A02B–0265–C101	1
For 2–slot cabinet	A02B–0260–C021	1

- **Replacing a fan unit**

(1) Before starting the replacement of a fan unit, turn the CNC off.
(2) Pull the fan unit to be replaced.
(3) Lift the pulled fan unit until the fan unit is detached from the cabinet.
(4) Place a new fan unit on the cabinet.
(5) Push the new unit as far as it goes. When a click is heard, the unit is connected to the fan connector.

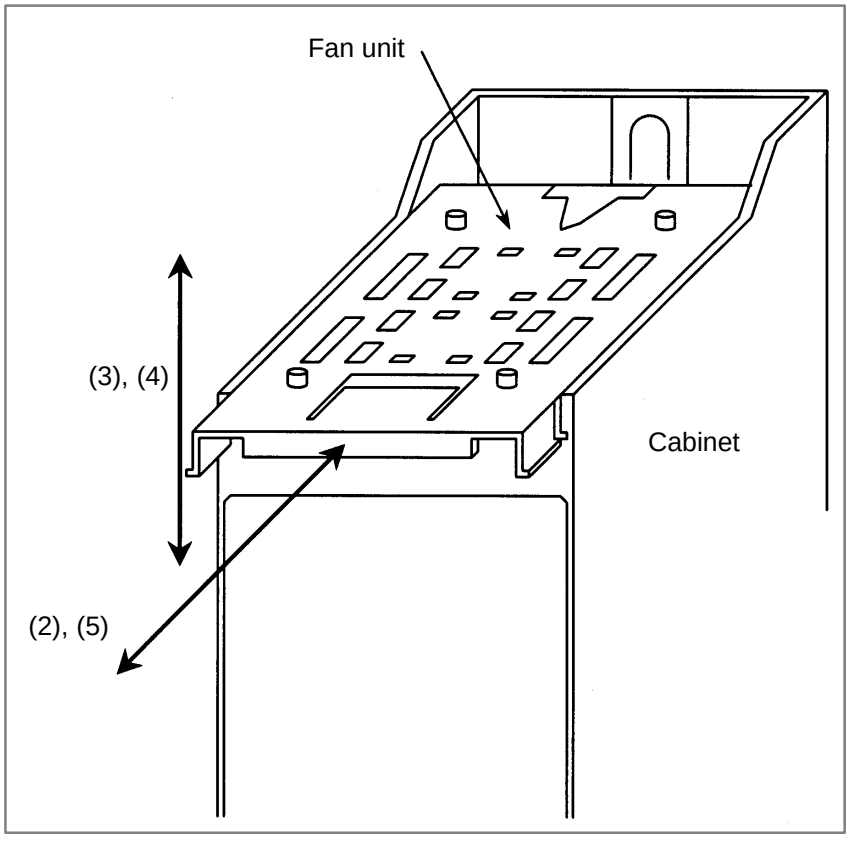

4.11 REPLACING THE FUSE OF THE LCD UNIT

WARNING

Before starting the replacement of the fuse, remove the cause of the fuse burn–out.
Accordingly, the replacement should be performed by a person fully trained in maintenance and safety. If the cabinet is opened to replace the fuse, take extreme care not to touch any high–voltage area (marked with ⚠ and covered by a shock prevention cover). If the area is uncovered, direct contact with this area will result in an electric shock.

- **Mounting position of the fuse**

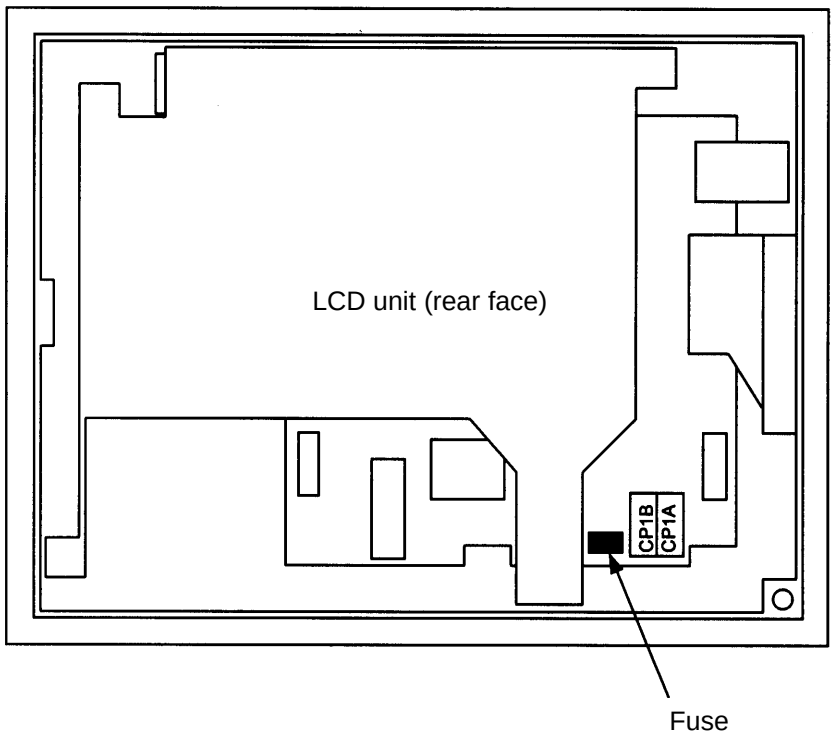

- Information of the fuse
  Ordering information: A02B–0265–K101
  Rating: 2.0 A
  Individual information: A60L–0001–0290#LM20C

4.12 REPLACING THE LCD BACKLIGHT

WARNING
The replacement described here should be performed by a person fully trained in maintenance and safety. If the cabinet is opened to replace the unit, take extreme care not to touch any high–voltage area (marked with ⚠ and covered by a shock prevention cover). If the area is uncovered, direct contact with this area will result in an electric shock.

- **Ordering information of the backlight**

Backlight	Ordering information	Individual information
For 9.5″ LCD	A02B–0281–K114	A61L–0001–0154#BLC

NOTE
The back–light of the 10.4″ color LCD cannot be replaced.

- **Replacing the backlight**

(1) Remove soft key cable connector CK2, then remove the escutcheon from the LCD unit.
If the unit has a touch panel, remove touch panel signal cable connector CN1 as well.

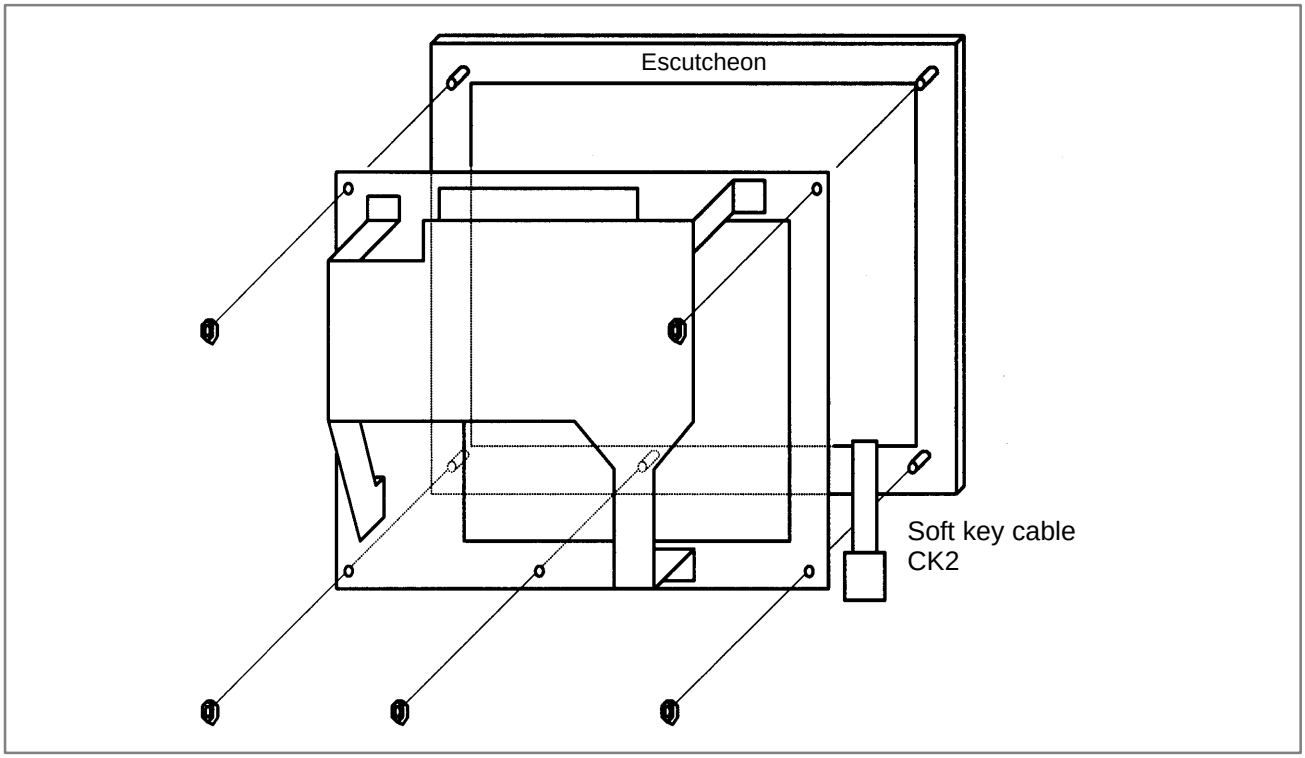

(2) Disconnect inverter cable connector CP1 and video signal cable connector CN8, then remove the LCD panel from the unit.

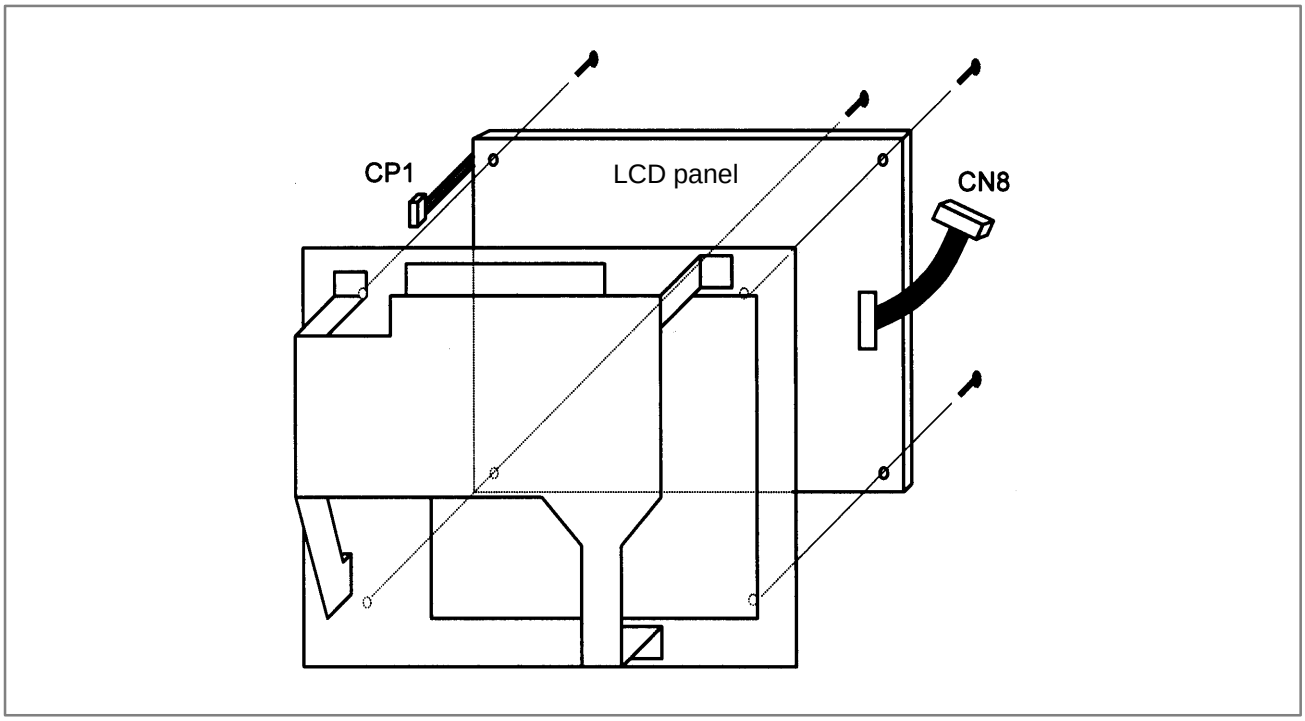

(3) For 9.5″ monochrome LCD

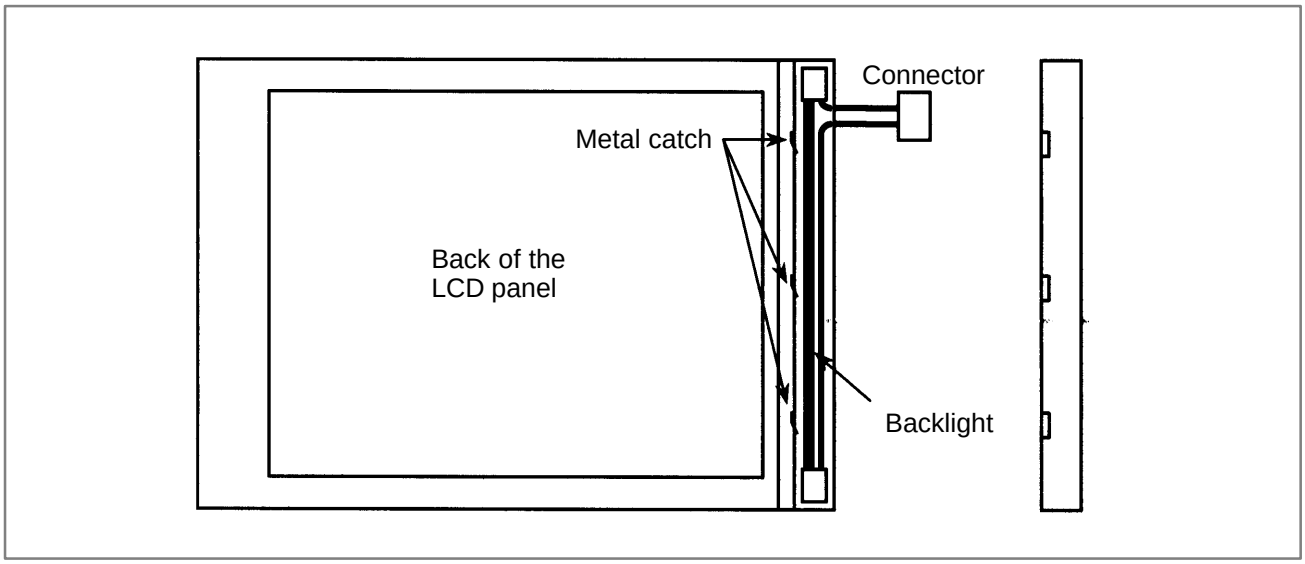

(4) After replacing the backlight, assemble the unit, reversing the disassembly procedure of steps (1) to (3).
During the assembly, take care to keep dust out.

4.13 HEAT GENERATION OF THE UNITS

Unit		Heat generation	Remarks
Control unit	1–slot cabinet	30W	(*1)
	3–slot cabinet	43W	
Option board	HSSB board	4W	
	Sub–CPU board	14W	
	PMC C board	7W	
	Serial communication board	7W	
	Symbol CAP*i* T board	10W	
	RISC board	9W	
	Data server board	6.3W	Including 0.3 W of the ATA card(*2)
	RISC + data server board	15.3W	Including 0.3 W of the ATA card(*2)
	Loader control board	15W	(*3)
	I/O Link II board	9W	
	Ethernet board	6W	
	DeviceNet interface board	4W	
	PROFIBUS board	9W	
	FL–net board	7W	

NOTE
1 The values of the main CPU board and MDI unit are included. The values of option boards are not included.
2 The heat generation of the ATA flash card may be different if a large–capacity card is used or if the card specifications are changed.
3 The values are taken when 50% of inputs are turned on.

Unit	Heat generation	Remarks
MDI unit	0W	
Operator's panel I/O module	12W	(*1)
Connector panel I/O module (basic)	8W	(*1)
Connector panel I/O module (expansion)	5W	(*1)
Separate detector interface unit	9W	Unit with 4 basic axes only
Separate detector interface unit	14W	4 basic axes + 4 additional axes(*2)

NOTE
1 The values are taken when 50% of the module inputs are turned on.
2 The heat generated in the separate detector is not included.

5 MATTERS COMMON TO BOTH LCD–MOUNTED TYPE AND STAND–ALONE TYPE *i* SERIES (HARDWARE)

This chapter describes the hardware common to the LCD–mounted type *i* series and stand–alone type *i* series.

5.1 MOUNTING AND DEMOUNTING CARD PCBS . 354
5.2 MOUNTING AND DEMOUNTING DIMM MODULES 357
5.3 MAINTENANCE OF HEAT EXCHANGER OF HEAT PIPE TYPE 359
5.4 LIQUID CRYSTAL DISPLAY (LCD) 363
5.5 DISTRIBUTED I/O SETTING 368
5.6 REPLACING FUSES ON VARIOUS UNITS 371
5.7 ENVIRONMENTAL CONDITIONS OUTSIDE CABINET 376
5.8 COUNTERMEASURES AGAINST NOISE 377
5.9 NOTES ON USING THE MDI UNIT 386
5.10 REPLACING THE MAINTENANCE PARTS OF CNC DISPLAY UNIT FOR PC FUNCTIONS AND PANEL *i* 387
5.11 REPLACING THE MAINTENANCE PARTS OF CNC DISPLAY UNIT FOR *i*s SERIES CNC . . . 395

5.1 MOUNTING AND DEMOUNTING CARD PCBS

WARNING

Only those personnel who have received approved safety and maintenance training may perform this replacement work.

When opening the cabinet and replacing a card PCB, be careful not to touch the high–voltage circuits (marked ⚠ and fitted with an insulating cover). Touching the uncovered high–voltage circuits presents an extremely dangerous electric shock hazard.

CAUTION

1 Before starting replacement work, back up the contents (such as parameters and programs) of the SRAM memory of the CNC. Otherwise, the contents of the SRAM memory may be lost during replacement work.
2 If the SRMA data check method (parity check or ECC check) has been changed after the replacement, a parity or ECC alarm may occur at power–on, possibly causing damage to the SRAM data. Back up the SRAM data before starting replacement, and restore the data after completing the replacement.

5.1.1 Demounting a Card PCB

1) Pull outward the claw of each of the four spacers used to secure the card PCB, then release each latch. (See Fig. a.)
2) Extract the card PCB upward. (See Fig. b.)

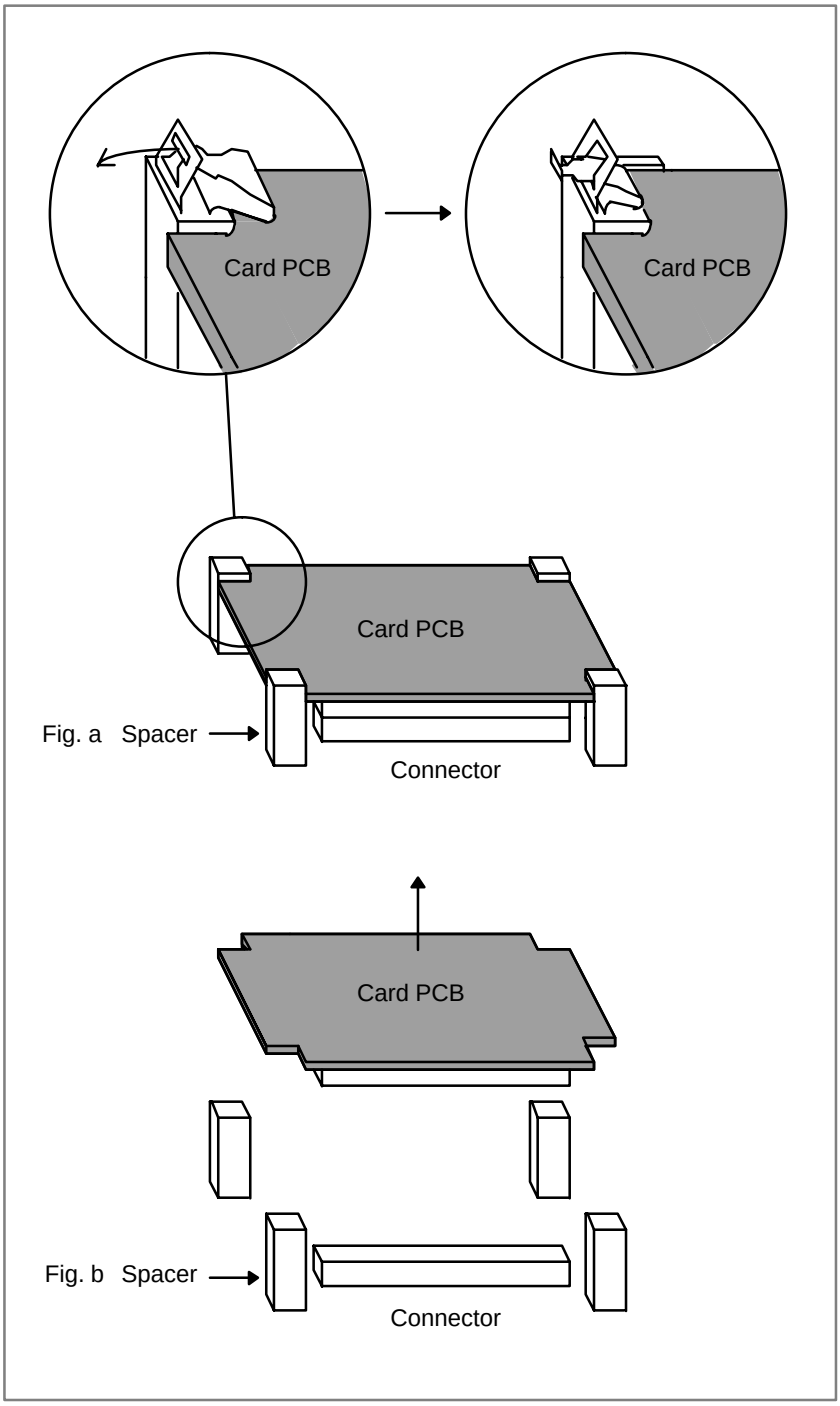

5.1.2 Mounting a Card PCB

1) Check that the claw of each of the spacers is latched outward, then insert the card PCB into the connector. (See Fig. c.)
2) Push the claw of each spacer downward to secure the card PCB. (See Fig. d.)

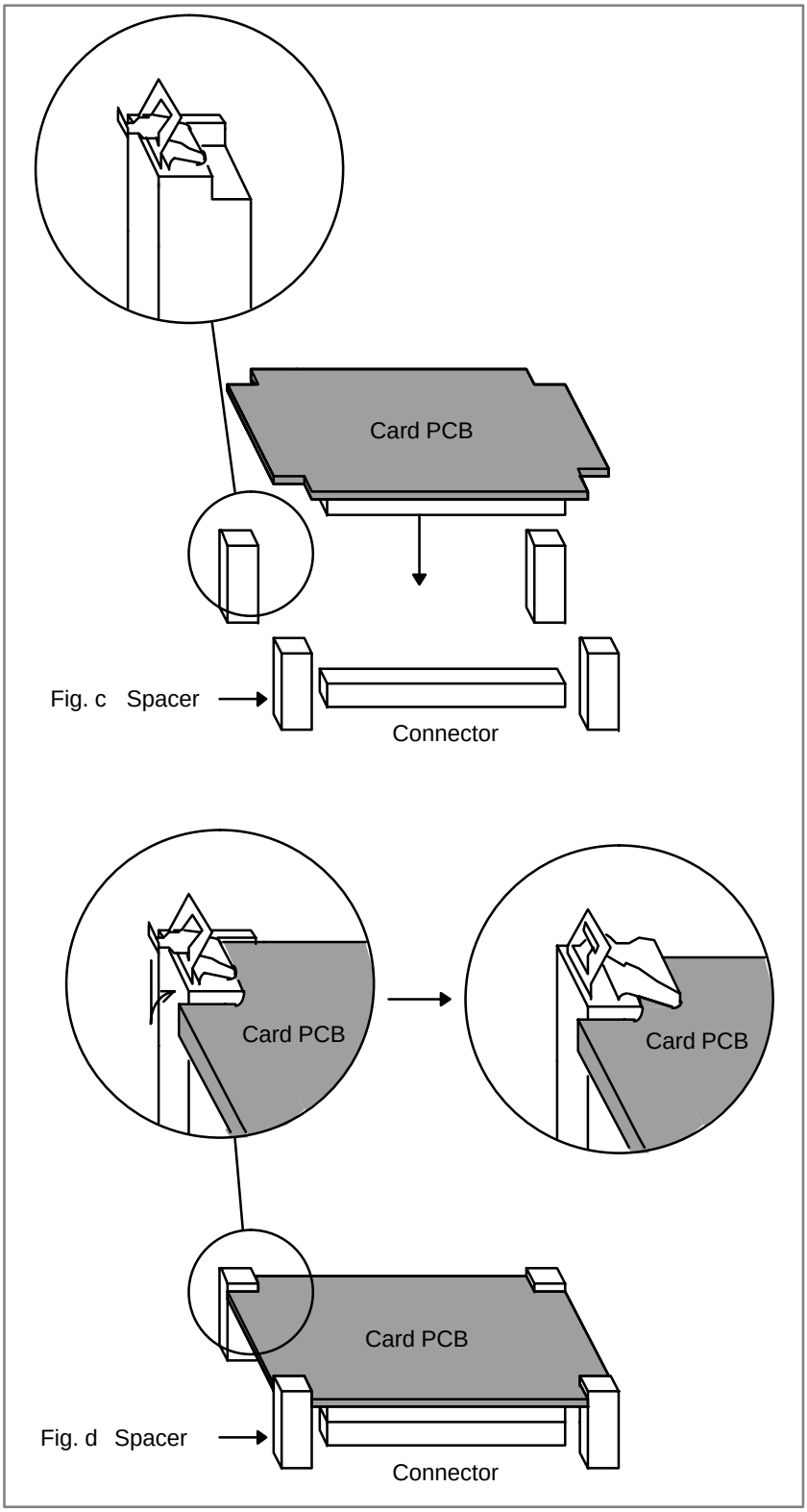

5.2 MOUNTING AND DEMOUNTING DIMM MODULES

WARNING

Only those personnel who have received approved safety and maintenance training may perform this replacement work.

When opening the cabinet and replacing a module, be careful not to touch the high–voltage circuits (marked ⚠ and fitted with an insulating cover). Touching the uncovered high–voltage circuits presents an extremely dangerous electric shock hazard.

CAUTION

Before starting replacement work, back up the contents (such as parameters and programs) of the SRAM memory of the CNC. Otherwise, the contents of the SRAM memory may be lost during replacement work.

Before replacing an SRAM module, be sure to back up the contents of the SRAM module.

5.2.1 Demounting a DIMM Module

1) Open the claw of the socket outward. (See Fig. a.)
2) Extract the module slantly upward. (See Fig. b.)

5.2.2 Mounting a DIMM Module

1) Insert the module slantly into the module socket, with side B facing upward. (See Fig. b.)
2) Push the module downward until it is locked. (See Fig. c.)
At this time, push it down with pushing two points of (*) in the figure.

Fig. a

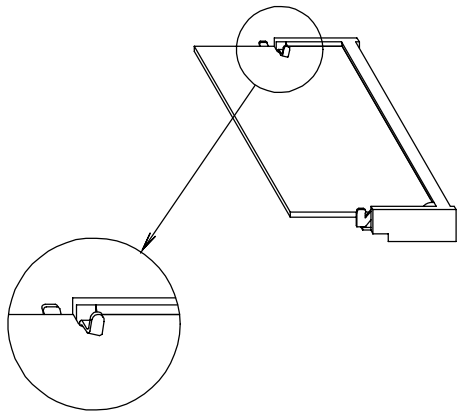

Fig. b

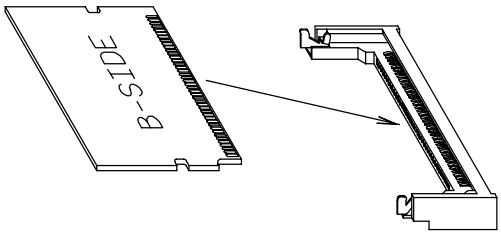

Fig. c

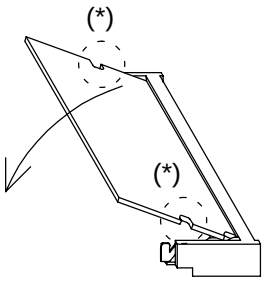

5.3 MAINTENANCE OF HEAT EXCHANGER OF HEAT PIPE TYPE

The performance of the heat exchanger degrades due to a buildup of dirt. Clean the heat exchanger periodically. The cleaning interval depends on the installation environment. So, clean the heat exchanger at appropriate intervals according to the level of dirt built up.

WARNING

High voltage is applied to the heat exchanger of heat pipe type. Before maintaining the heat exchanger of heat pipe type, always turn off the power to the CNC.
When opening the cabinet and replacing a heat exchanger of heat pipe type, be careful not to touch the high–voltage circuits (marked ⚠ and fitted with an insulating cover).
Touching the uncovered high–voltage circuits presents an extremely dangerous electric shock hazard.

Cleaning and replacing the air filter

Procedure for cleaning and replacing the air filter

1 Before cleaning and replacing the air filter, turn off the fan power supply.

2 Remove the filter cover, then demount the filter.

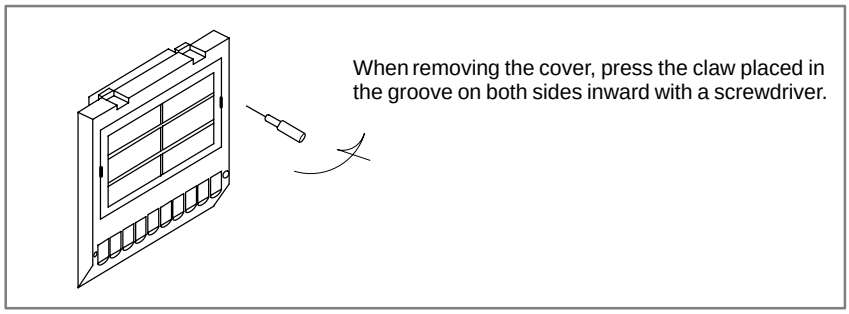

3 Blow air against both sides of the filter to remove dust.

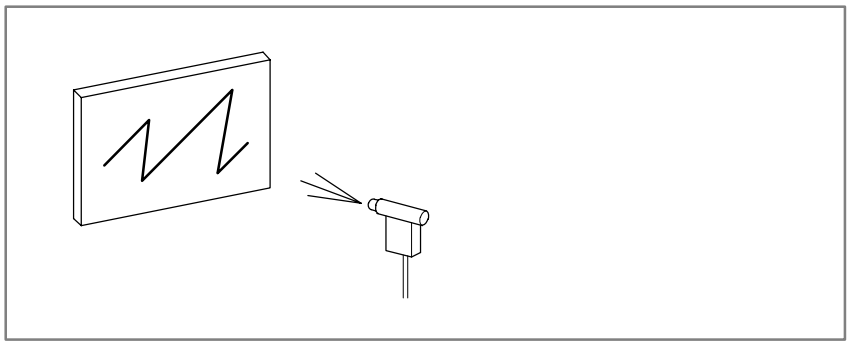

4 When the filter is dirty extremely, wash it with a solution of water and neutral detergent, and rinse it with fresh water, then allow it dry naturally.
Alternatively, replace it with a new filter (use only the specified filter).

5 Set the cleaned or new filter. Next, align the claws with the grooves, then press them to reinstall the cover. Check that the cover is not removed when it is pulled toward you.

Cleaning the heat exchanger

Procedure for cleaning the heat exchanger

1 Before cleaning the heat exchanger, turn off the fan power supply.

2 Demount the external fan unit from the main body of the heat exchanger.

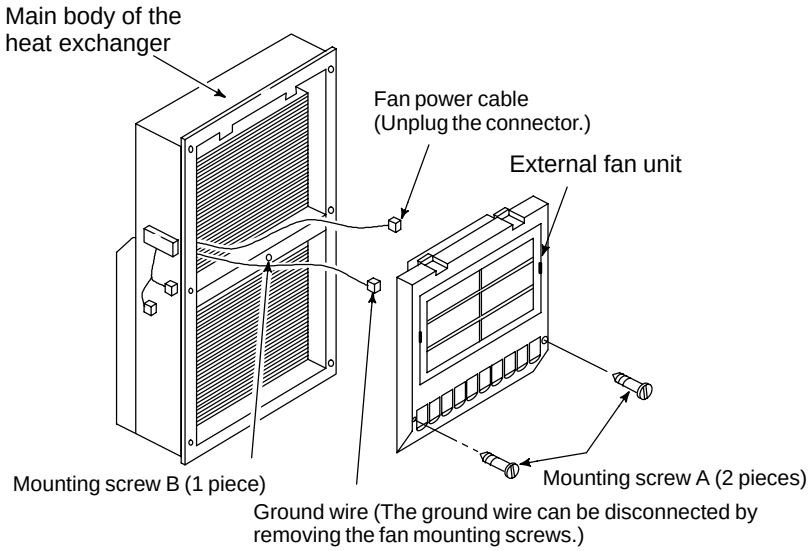

Remove the two mounting screws (A) used for mounting the external fan unit, then demount the unit by sliding it downward. Next, disconnect the fan power cable and ground wire. Remove mounting screw (B).

- **Cleaning the fan unit**

Procedure for cleaning the fan unit

1 Remove any buildup of dust, dirt, and mist from the fan motor and fan mounting case with a dry waste cloth. If dirt such as mist cannot be removed easily, use a waste cloth moistened with a solution of water and neutral detergent after squeezing it softly. In this case, be careful not to allow a solution of water and neutral detergent to enter the electric circuitry such as the rotor of the fan motor.

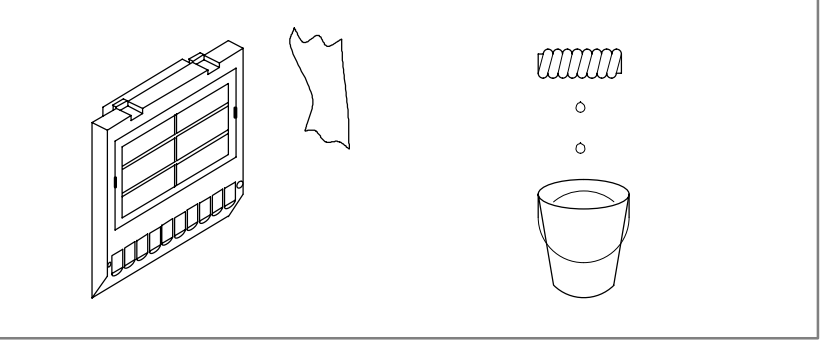

- **Cleaning the fan of the heat exchanger**

Procedure for cleaning the fan of the heat exchanger

1 Demount the heat exchanger from the unit, then remove dust and mist from the fan by blowing air or by using a dry waste cloth or brush.

When the fan is dirty extremely

1 Detach the internal fan unit, terminal block, and cables from the main body.

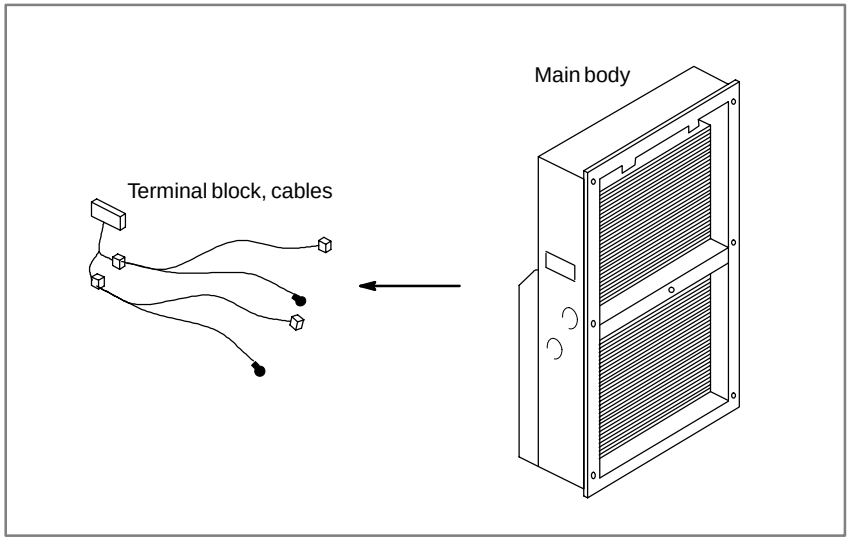

2 Clean the fan by using a brush and a solution of water and neutral detergent. At this time, be careful not to bend a vane.

3 After cleaning, dry the heat exchanger and fan unit sufficiently.

- **Reassembly**

Procedure for reassembly after cleaning

After cleaning the fan unit and heat exchanger, follow the steps below.

1 Reinstall the terminal block and cables at the original locations.

2 Reinstall the fan unit at the original location. At this time, reconnect the fan power cable and ground wire correctly.

5.4 LIQUID CRYSTAL DISPLAY (LCD)

Brightness of the monochrome LCD

When the ambient temperature is low, the brightness of the LCD decreases. (The LCD screen is dark particularly immediately after the power is turned on.) This phenomenon is not a failure but is a property specific to the LCD. When the ambient temperature increases, the LCD screen becomes brighter. The monochrome LCD has a brightness control function. For the method of adjustment, see Section 1.17.

LCD with a touch panel

The touch panel is operated by directly touching the LCD screen. For this operation, be sure to use a FANUC–supplied pen (A02B–0236–K111) dedicated to the touch panel. If a sharp–pointed pen is used, for example, to touch the LCD screen, the LCD surface may be flawed or damaged. Moreover, do not touch the LCD screen directly with a finger. Otherwise, the operability of the LCD may deteriorate, and the LCD screen may get dirty.

Protection sheet for the touch panel

A protection sheet is attached the face of an LCD with a touch panel to protect the thin film of the touch panel and LCD. If the protection sheet is damaged, it can be replaced. (The protection sheet is a consumable part.)

Replacing the protection sheet

- **Materials used**

1) Protection sheet
   A02B–0236–K110: For 10.4” LCD with touch panel and soft key
   A02B–0236–K130: For 10.4” LCD with touch panel
2) Neutral detergent (detergent that can clean oily dirt off = detergent for kitchen can be used)
3) Soft cloth (such as towel)

- **Replacement procedure**

1) Before replacement
   <1> Turn off the power to the machine.
   <2> Peel off the old protection sheet from the surface of the touch panel.
   <3> Wipe off adhesive residue if any on the screen surface with alcohol.
   <4> Use the detergent to remove oil or dirt stuck to the surface of the touch panel.
   <5> With a soft, damp cloth, wipe off detergent completely.
   - If the touch panel surface becomes cloudy, oil is still left on the surface. Remove oil completely.
   - If oil or detergent is left on the surface of the touch panel, the protection sheet cannot adhere to the panel completely and will sometimes peel off easily.

<6> With a dry soft cloth, wipe off moisture completely.

2) Applying the protection sheet

2–1) For A02B–0236–K110

<1> Fold the tab over the front side (the side opposite to the backing sheet).

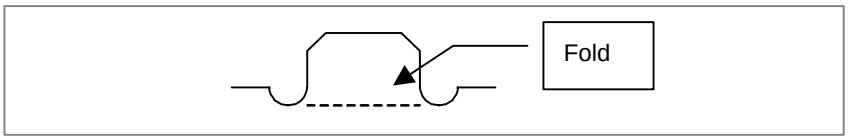

<2> Peel off the backing sheet.

<3> Position the sheet, then attach the upper and lower sides of the sheet first. Check that the sides of the protection sheet do not touch the escutcheon.

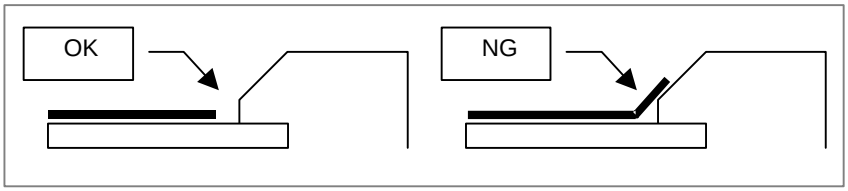

<4> Attach the right and left sides of the protection sheet while pushing out air between the touch panel and protection sheet.

- With part of the protection sheet kept stuck to the touch panel, do not attempt to correct the position of the protection sheet by pulling the sheet.

<5> Press the adhesive parts of the four sides, and attach the entire sheet completely.

- Check that the four corners and four sides of the protection sheet do not float.

2–2) For A02B–0236–K130

<1> Peel off the white film attached on the back (facing the LCD) of the new protection sheet.

<2> Attach the protection sheet so that it is to the lower–left of the replacement tab. At this time, align the overhang edge at bottom of the escutcheon with the corresponding part of the protection sheet. In addition, prevent dust from entering between the LCD and the protection sheet.

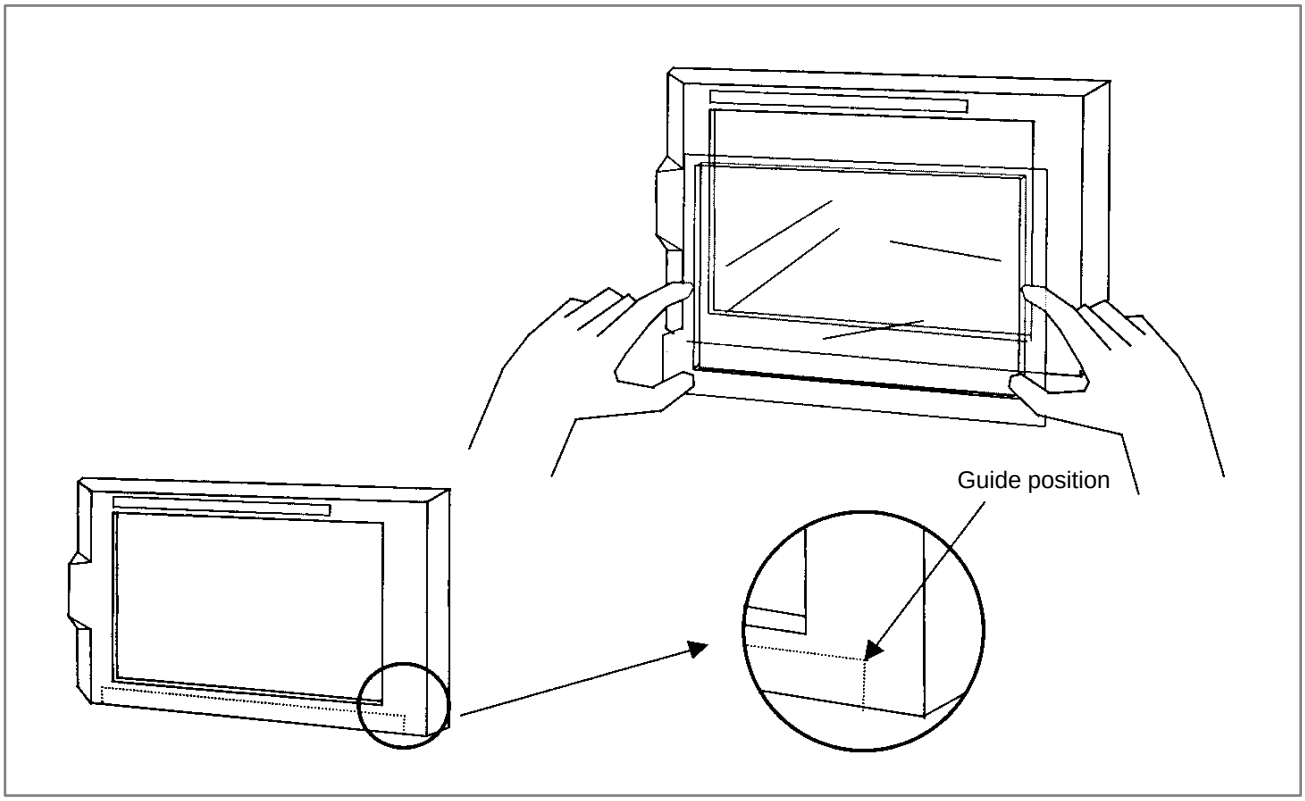

<3> Attach the four sides while pushing out air between the touch panel and the protection sheet.

- Do not pull the protection sheet to correct its position with the part of the sheet kept stuck to the touch panel.

<4> Press the adhesive parts of the four sides, and attach the sheet completely.

- Check that the four corners and four sides of the protection sheet do not float.

3) Checks after replacement

<1> Check that there is no wrinkle on the surface of the protection sheet.

<2> After power–on, check that there is no touch panel portion kept pressed.

<3> Press the touch panel, and check that correct operation takes place.

Touch panel compensation

- **Condition that requires compensation**

Touch panel compensation is required:

1 When the LCD unit is replaced

2 When the touch panel is replaced

3 When the touch panel control printed circuit board is replaced

4 Memory is all cleared.

- **Parameter setting**

	#7	#6	#5	#4	#3	#2	#1	#0
3113			DTPCL					

[Data type] Bit

#5 (DTPCL) The compensation function for the touch panel on the display is:

0 : Disabled

1 : Enabled

- **Method of compensation**

1 Set bit 5 (DTPCL) of parameter No. 3113 to 1.

2 Press function key <SYSTEM>.

3 Pressing the continuous menu key several times displays soft key [TP CAL].

4 Pressing soft key [TP CAL] displays the touch panel compensation screen.

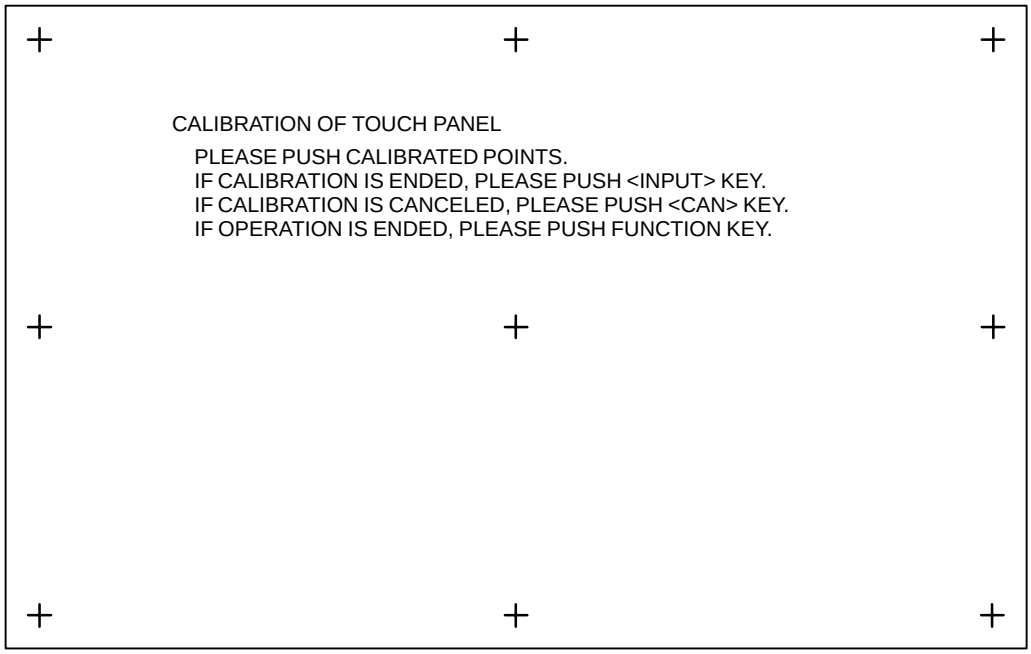

5 Press the nine compensation points (marked with +) with touch panel pen. You may press the nine points in any order. When you press a + mark correctly, the + mark blinks. When you press a + point incorrectly, the message “CALIBRATED POINT DOES NOT MATCH, PLEASE PUSH AGAIN.” appears.

6 After pressing all of the nine compensation points, press the <INPUT> key to terminate compensation. To cancel compensation or start all over again, press the <CAN> key.

7 Upon normal termination, the message “CALIBRATION WAS ENDED.” appears.

8 Pressing the function key exits from the touch panel compensation screen, and terminates or stops compensation operation.

9 Upon termination of compensation operation, set bit 5 (DTPCL) of parameter No. 3113 to 0.

NOTE
Touch panel of the CNC display unit with PC functions is compensated by the exclusive program.
When compensating the touch panel for the *i*s series, select [Start] → [Settings] → [Control Panel] → [Adjusting Stylus], instead of using the above method.

5.5 DISTRIBUTED I/O SETTING

By changing the setting (rotary switch) on an expansion module, a connection can be made to skip an expansion module or expansion modules as shown below.

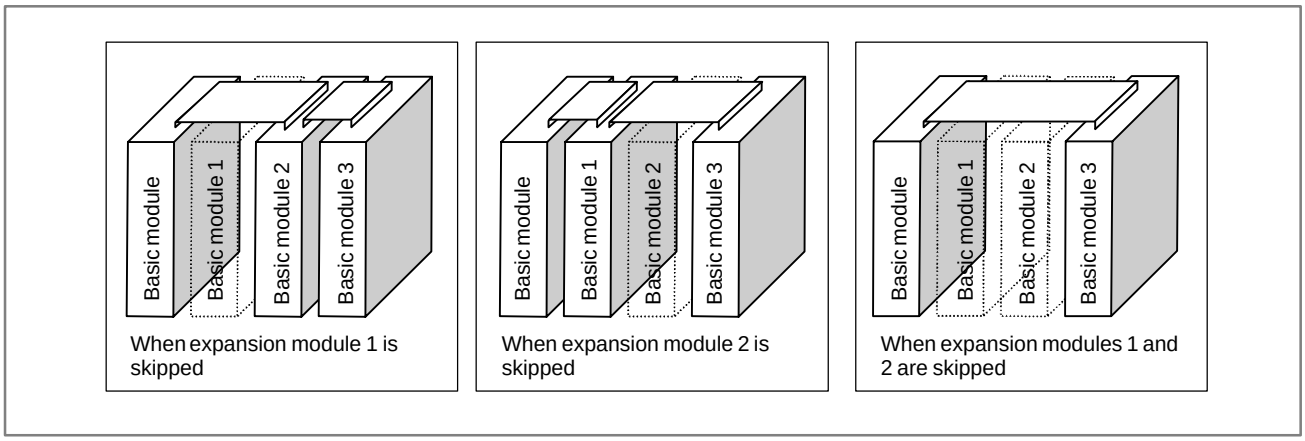

Method of setting (control and setting method)

A control (rotary switch) is provided on the location shown below of each expansion module. When changing the setting, turn the rotary switch with a flat–blade screwdriver with a tip diameter of about 2.5 mm.

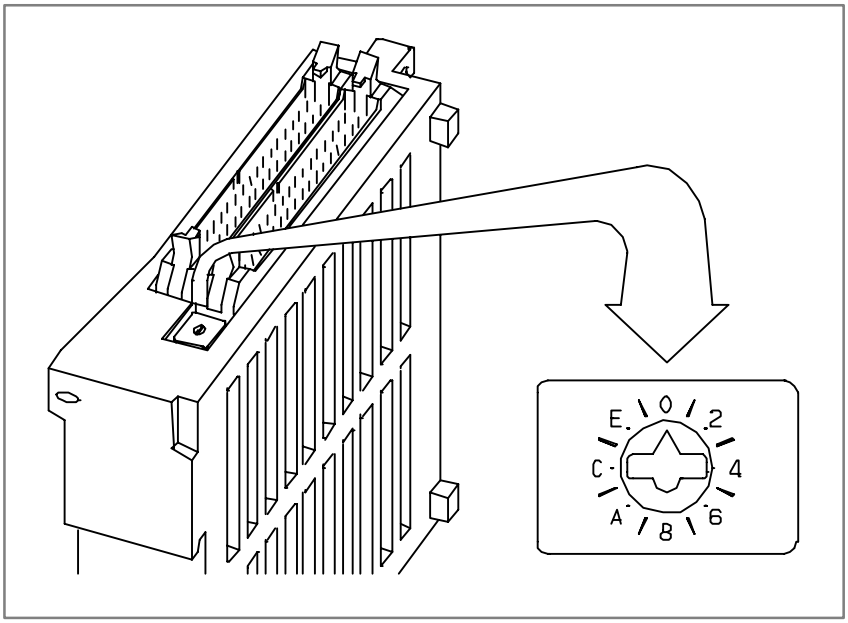

Each setting position of the rotary switch has the meaning as indicated below.

Setting position	Indication	Meaning of setting
0	0	Standard setting. The rotary switch is set to this position at the time of shipment from FANUC. This setting is not skipped an expansion module.
1	–	Set the rotary switch of an expansion module to this position when the one preceding expansion module is skipped.

Setting position	Indication	Meaning of setting
2	2	Set the rotary switch of an expansion module to this position when the two preceding expansion modules are skipped.
3	–	Setting prohibited
4 to F	4, –, 6, –, 8, –, A, –, C, –, E, –,	4, 8, or C has the effect of 0. 5, 9, or D has the effect of 1. 6, A, or E has the effect of 2. 7, B, or F has the effect of 3. (← setting prohibited)

Examples of setting

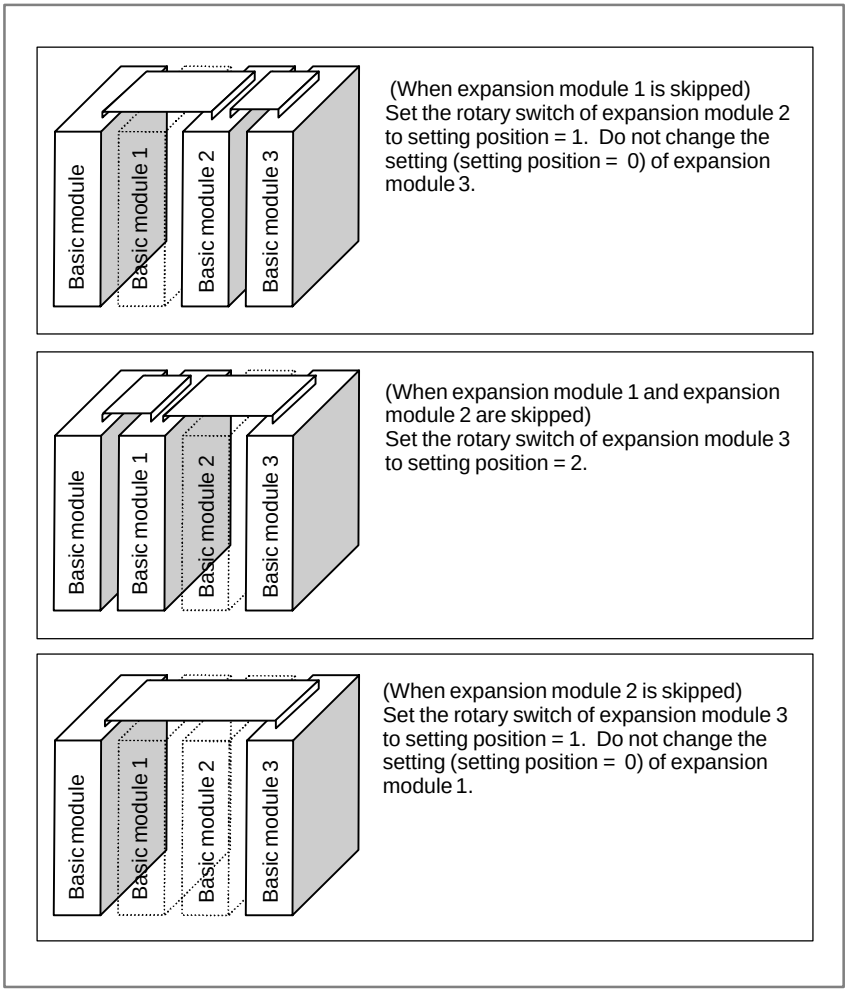

This function was not available initially, but was recently added. This function became available, depending on the type of module, as indicated below.

Expansion module B (DI/DO = 24/16, without a manual pulse generator interface)	A03B–0815–C003	Available starting with shipment in June 1998 and later
Expansion module C (DO = 16, 24A output)	A03B–0815–C004	Available starting with shipment in August 1998 and later
Expansion module D (analog input)	A03B–0815–C005	Available starting with shipment in August 1998 and later

NOTE
To expansion module A (DI/DO = 24/16, with a manual pulse generator interface) (A03B–0815–C002), a rotary switch is added as the other modules are modified. However, expansion module A is always installed at the location of expansion module 1, so that the setting of expansion module A need not be changed.

5.6 REPLACING FUSES ON VARIOUS UNITS

WARNING

Before replacement of a blown fuse, the cause of the blown fuse must be corrected. So, fuse replacement work must be done only by a person who is trained in the related maintenance and safety requirements. When opening the cabinet and replacing a fuse inside, be careful not to touch the high–voltage circuits (marked with ⚠ and fitted with an insulating cover). Touching the uncovered high–voltage circuits presents an extremely dangerous electric shock hazard.

For the specification of the fuse of each unit, see the list of consumables in Appendix B.

- **Fuse mounting location on the connector panel I/O modules**

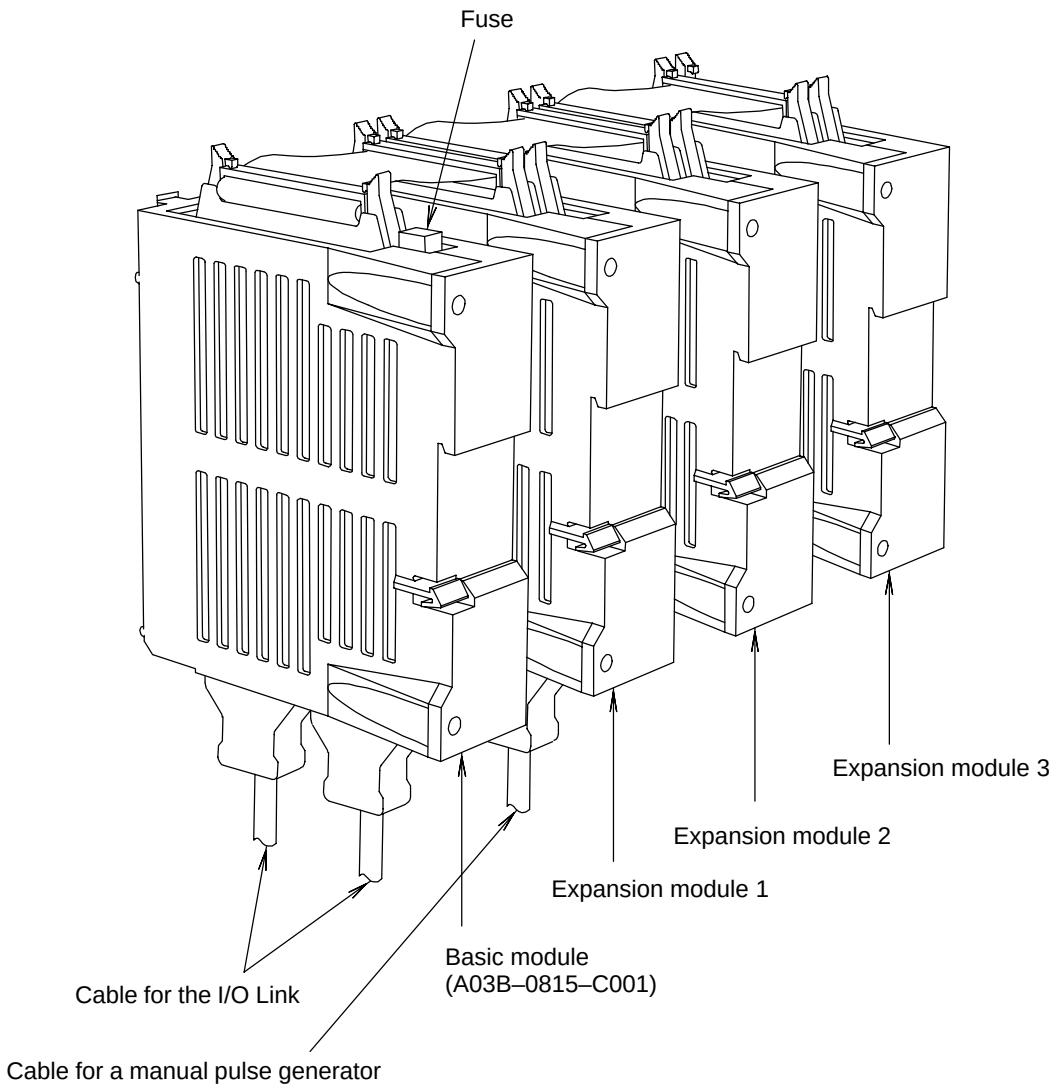

NOTE
No fuse is provided on the expansion modules. A fuse is provided on the basic module only.

- **Fuse mounting location on the operator's panel I/O modules**

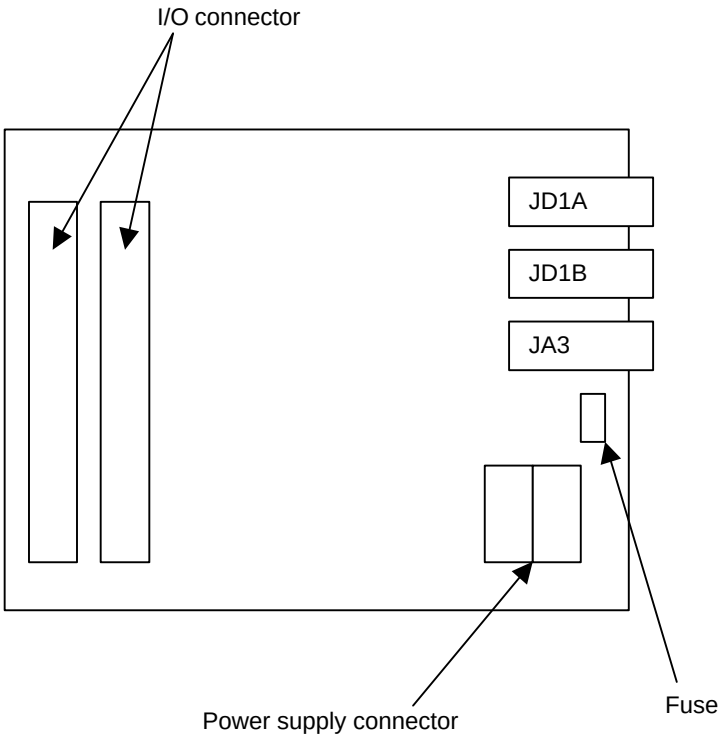

This drawing is for A20B–2002–0470, A20B–2002–0520, and A20B–2002–0521.

- **Fuse mounting location on the operator's panel connection units**

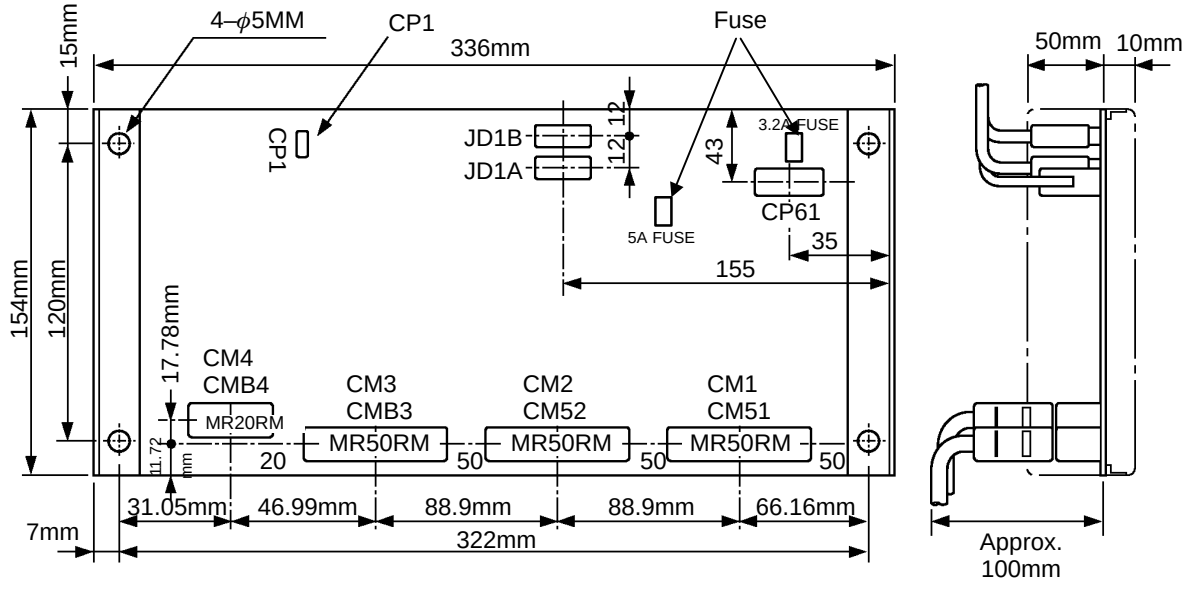

This drawing is for A20B–2200–0660, A20–2200–661, A16B–2202–0730, and A16B–2202–0731.

- **Fuse mounting locations on the machine operator's panel interface unit**

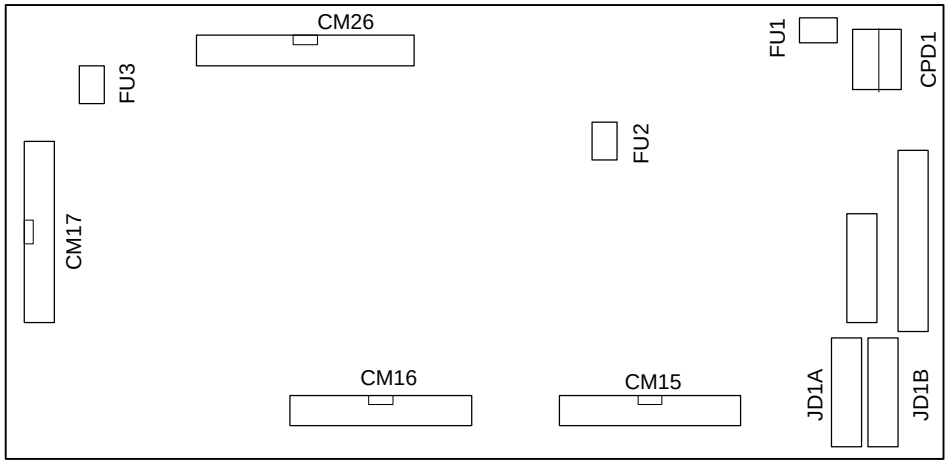

FU1: Fuse for +24V (for protection of general–purpose DO and the power supply of this printed circuit board)
FU2: Fuse for +5V (for protection of the IC power supply and manual pulse generator)
FU3: Fuse for +5E (for protection of general–purpose DI)

This drawing is for A16B–2201–0110.

NOTE
FU2 is not mounted with Edition 05A and later.

- **Fuse mounting location on the distributed I/O machine operator's panels**

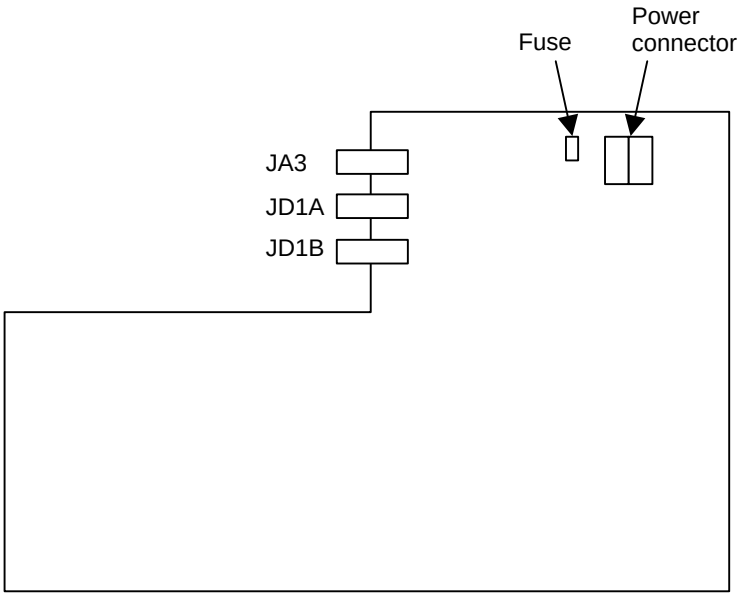

This drawing is for A02B–0236–C140 and A02B–0236–C141.

- **Fuse mounting location on the separate detector interface unit**

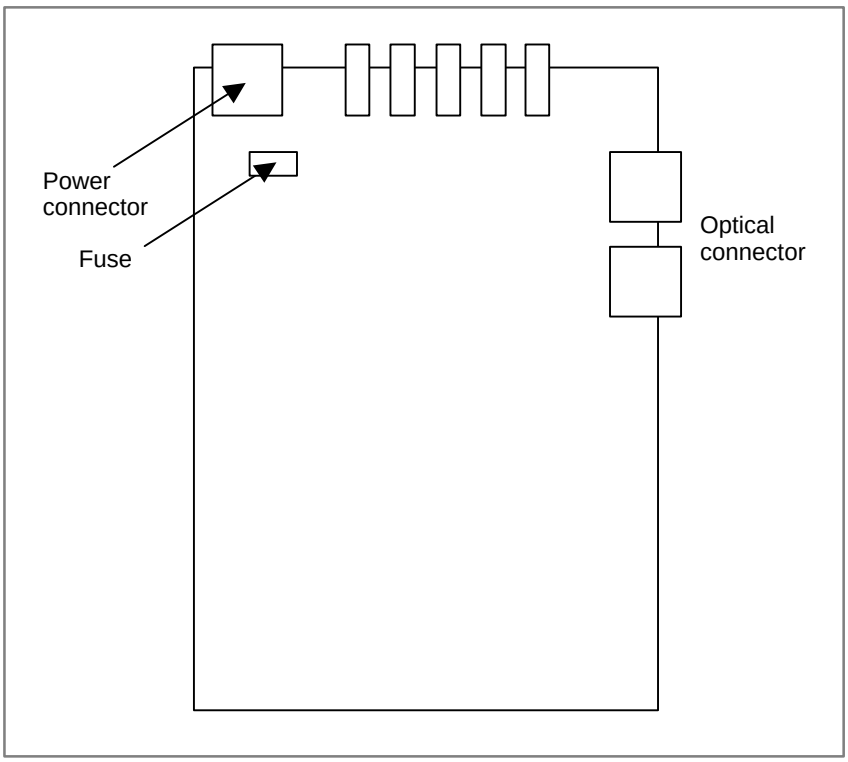

5.7 ENVIRONMENTAL CONDITIONS OUTSIDE CABINET

The control units and various peripheral units supplied from FANUC are designed assuming that those units are accommodated in enclosed cabinets. The cabinets mentioned here include:

- Cabinet that is manufactured by a machine tool builder to house control units and peripheral units
- Operation pendant that is manufactured by a machine tool builder to house control units and an operator's panel
- Similar products

The table below indicates the environment conditions for installing control units in these cabinets.

	Condition	**Display LCD–mounted type control unit and display unit (excluding units with a data server)**	**Display stand–alone type control unit**
Ambient temperature of units	Operating	0°C to 58°C	0°C to 55°C
	Storage and transportation	–20°C to 60°C	
Change in temperature		1.1 °C/minute max.	
Humidity	Normal	Relative humidity: 75% or less No condensation	
	Short term (not exceeding 1 month)	Relative humidity: 95% or less No condensation	
Vibration	Operating	0.5 G or less	
	Non–operating	1.0 G or less	
Height above sea level	Operating	Up to 1000m	
	Non–operating	Up to 12000m	
Atmosphere		Normal machine plant environment (When a control unit is used in an environment where the control unit is exposed to a high level of dust and a high concentration of coolants an organic solutions, a separate study is required.)	

5.8 COUNTERMEASURES AGAINST NOISE

The CNC is becoming increasingly smaller as the surface mount technology and custom LSI technology advance.

In many cases, as the CNC becomes more compact, the mounting locations of its constituent units become closer to a noise source in the power magnetics cabinet.

In general, noise is generated by electrostatic coupling, electromagnetic induction, or a grounding loop, and is induced into the CNC.

The CNC incorporates sufficient countermeasures against external noise. However, it is difficult to measure the level and frequency of noise quantitatively, and many unknown factors are involved. So, to improve the operation stability of a CNC machine tool system, noise generation must be minimized, and the induction of generated noise into the CNC must be suppressed.

For design of equipment including a power magnetics cabinet, take these countermeasures on the machine side against noise into consideration.

5.8.1 Separation of Signal Lines

The cables used with a CNC machine tool are classified as indicated below. Handle the cables of each group according to the descriptions in the "Action" column.

Group	Signal	Action
A	Primary side AC power line	Bind the cables of this group separately from the cables of groups B and C(*1), or electromagnetically shield the cables of this group from the cables of groups B and C(*2). According to the descriptions of noise suppressors in Section 5.8.4, attach a spark killer or diode to the solenoid and relay.
	Secondary side AC power line	
	AC/DC power lines (including servo motor and spindle motor power lines)	
	AC/DC solenoid	
	AC/DC relay	
B	DC solenoid (24 VDC)	Attach a diode to the DC solenoid and relay. Bind the cables of this group separately from the cables of group A, or electromagnetically shield the cables of this group from the cables of group A. Separate the cables of this group from the cables of group C as far as possible. Shielding is recommended.
	DC relay (24 VDC)	
	DI–DO cable between I/O unit power magnetics cabinets	
	DI–DO cable between I/O unit machines	
	24–VDC input power cables for the control unit and its peripherals	
C	CNC–I/O unit cable	Bind the cables of this group separately from the cables of group A, or electromagnetically shield the cables of this group from the cables of group A. Separate the cables of this group from the cables of group B as far as possible. Shielding according to Section 5.8.5 is required.
	Cables for position loopback and velocity loopback	
	CNC–spindle amplifier cable	
	Position coder cable	
	Manual pulse generator cable	
	CNC–MDI cable(*3)	
	RS–232C and RS–422 cables	
	Battery cable	
	Other cables whose shielding is specified	

NOTE
1 Separate binding is to separate the bound cables of one group at least 10 cm from the bound cables of another group.
2 Electromagnetic shielding is to shield the bound cables of one group from the bound cables of another group with a grounded metal (iron) plate.
3 If the CNC–MDI cable is not longer than 30 cm, shielding is not required.

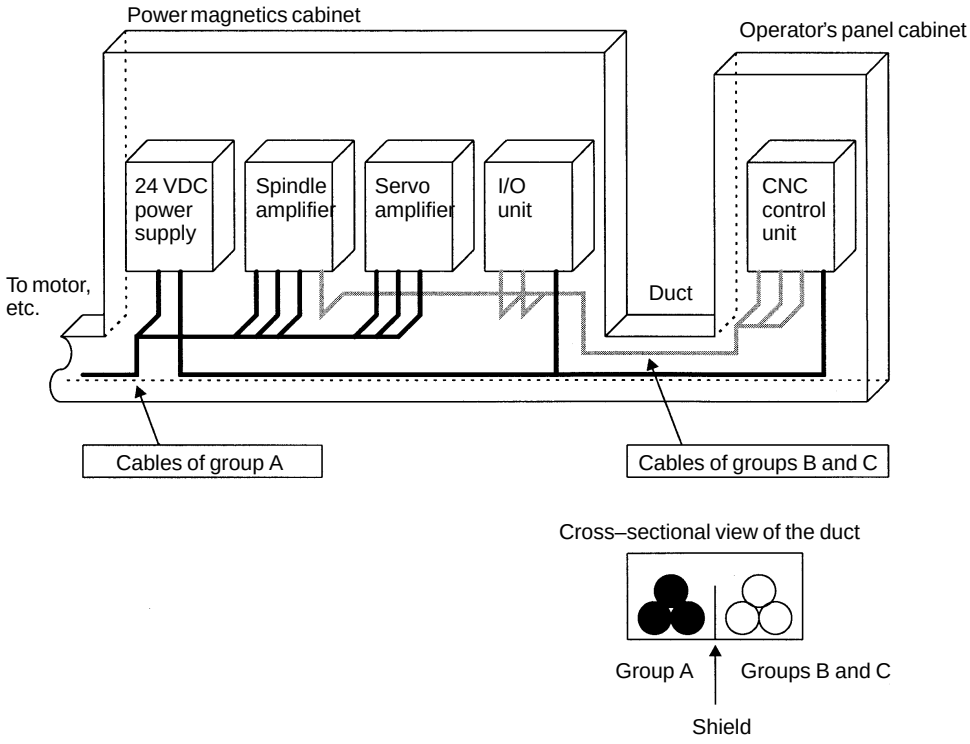

5.8.2 Grounding

With a CNC machine tool, three ground systems are used.

(1) Signal ground system (SG)
Signal ground (SG) provides a reference voltage (0 V) for the electric signal system.

(2) Frame ground system (FG)
The purposes of frame ground (FG) are to ensure safety and to provide shielding from external and internal noises. Specifically, the frames of equipment, unit cases, panels, inter–unit interface cables, and so forth are shielded.

(3) Protective earth (PE)
The protective earth (PE) is designed so that the protective grounds provided between the units are connected to ground at one point from a system point of view.

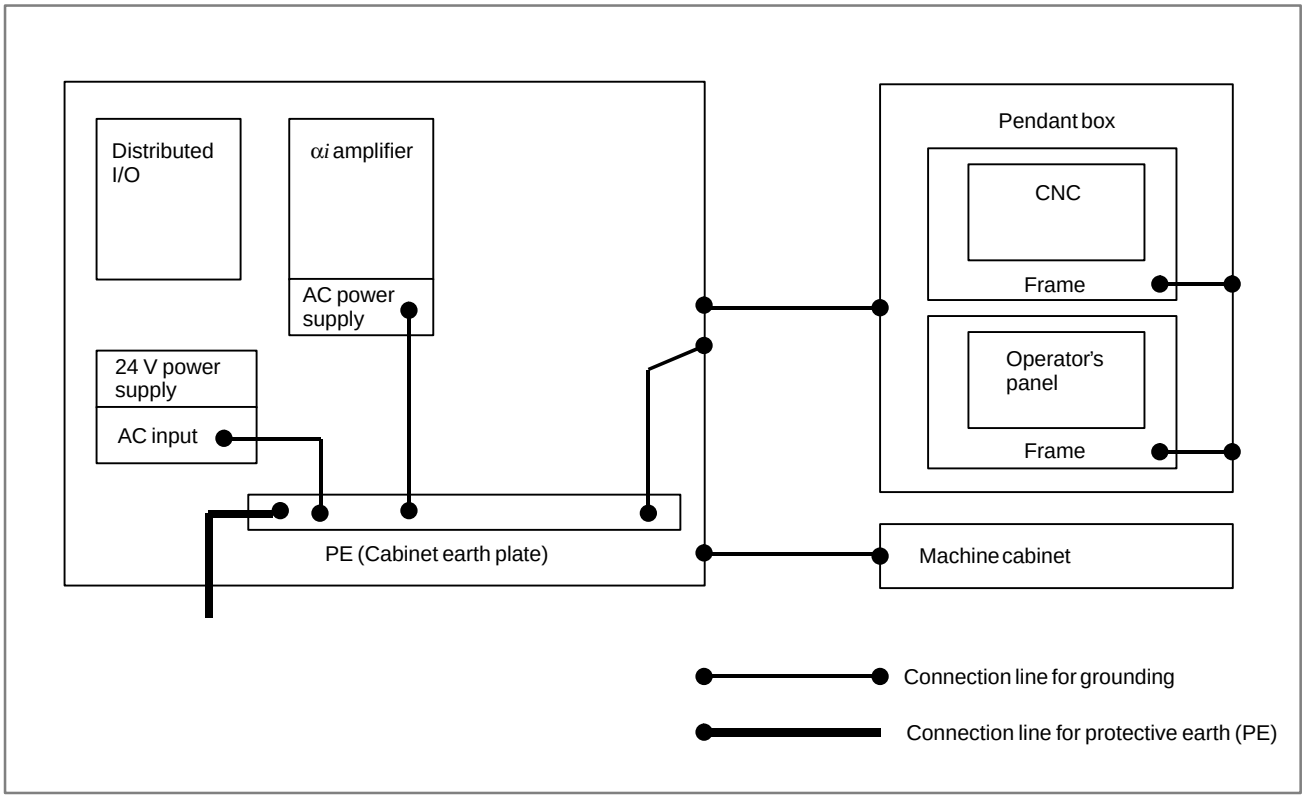

Notes on ground system wiring

- The grounding resistance of the protective earth (PE) must be 100 ohms or less (class–D grounding).
- The connection cable for the protective earth (PE) needs to have a cross–sectional area sufficient for flowing an accidental current that flows to the protective earth (PE) when an accident such as a short circuit occurs. (In general, a cross–sectional area equal to or greater than that of the AC power line is required.)
- As a connection cable for the protective earth (PE), use a cable integrated with an AC power line so that power is not fed when the ground wire is disconnected.

5.8.3 Signal Ground (SG) Connection of Control Unit

LCD–mounted type control unit

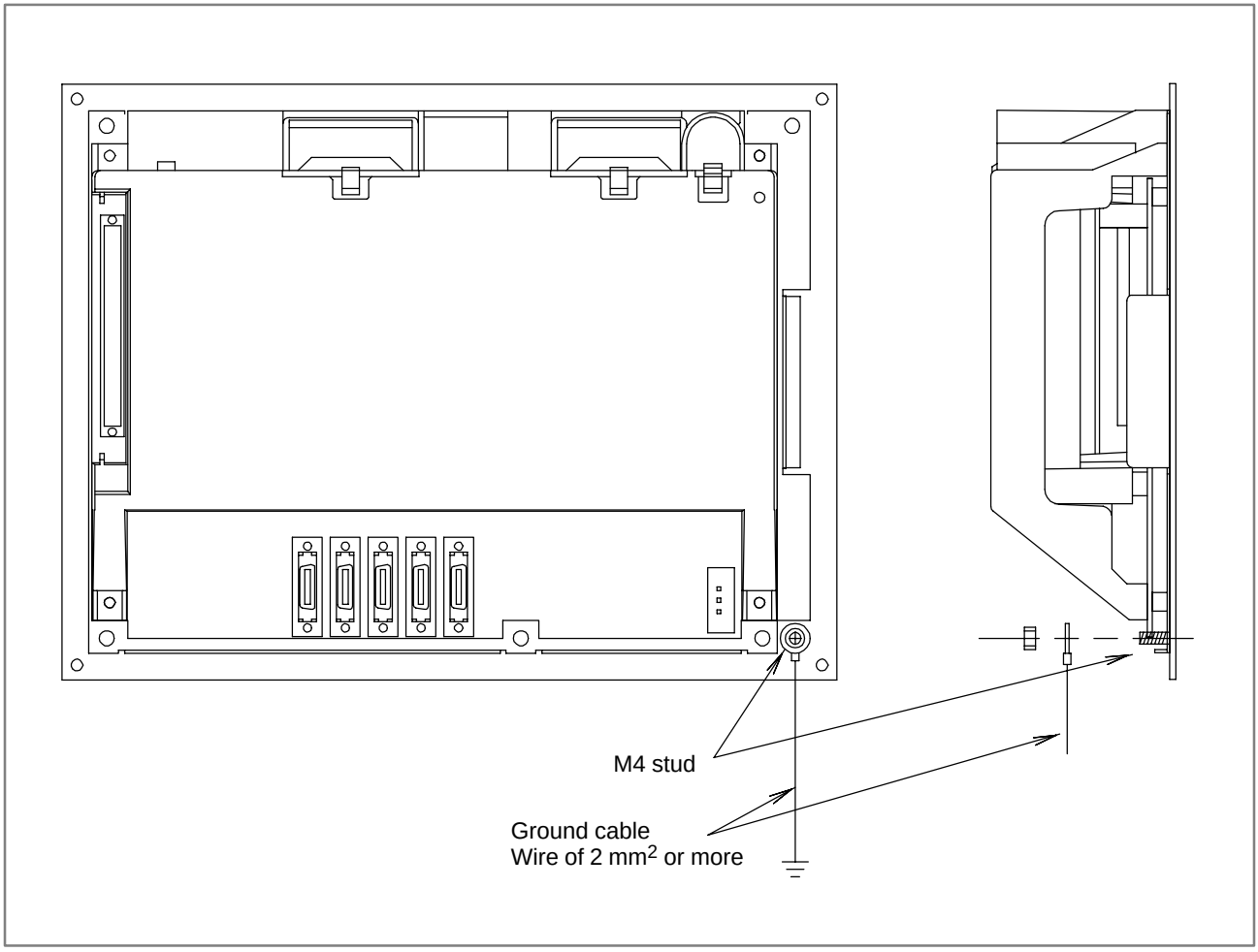

Connect the 0 V line inside the control unit to the ground plate of the cabinet through the signal ground terminal (shown above).

For the ground terminal locations of other units, see the external unit views in the appendix.

LCD stand–alone type control unit

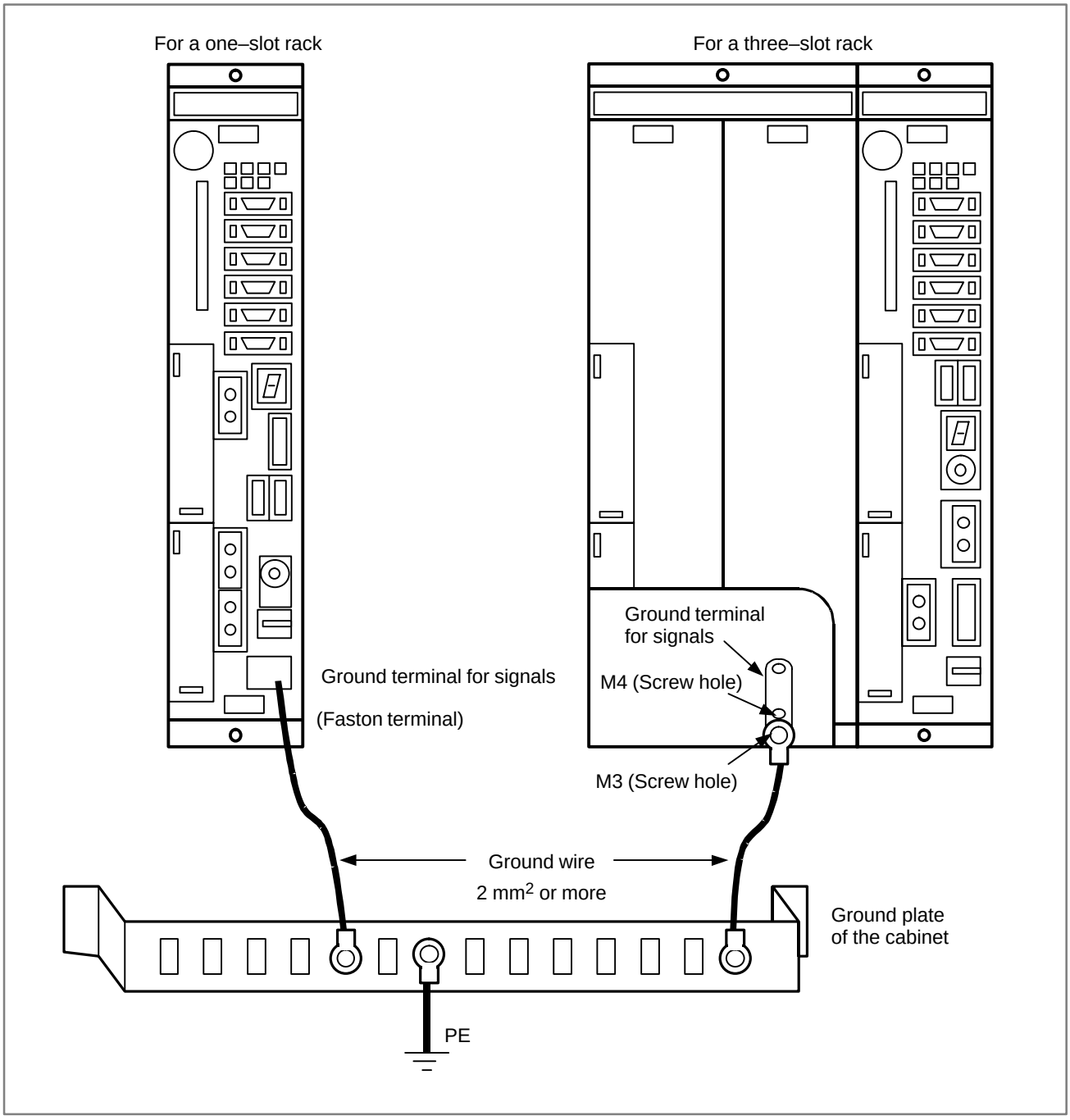

Connect the 0V line of the electronic circuitry in the control unit to the ground plate of the cabinet via the ground terminal for signals.

Note that the method of ground connection varies, depending on whether optional slots are provided.

Use a Faston terminal of the FANUC specification A02B–0166–K330. See Appendix A.

5.8.4 Noise Suppressor

With a power magnetics cabinet, components such as an AC/DC solenoid and AC/DC relay are used. When turned on and off, these components generate a high–energy pulse voltage due to coil inductance.

Such a pulse voltage is induced into cables, for example, and can interfere with electric circuitry.

Notes on spark killer selection

- Select a CR–type spark killer (for use with AC circuitry) (A varistor has a function for clamping the peak voltage of a pulse voltage, but cannot suppress a spike–like voltage. For this reason, the use of a CR–type spark killer is recommended.)
- As the CR values of a spark killer, use the following with the steady–state coil current (I (A)) and DC resistance used as references:

  1) Resistance (R): Coil DC resistance

  2) Electrostatic capacitance (C): $\frac{I^2}{10}$ to $\frac{I^2}{20}$ (μF)

     I: Coil steady–state current (A)

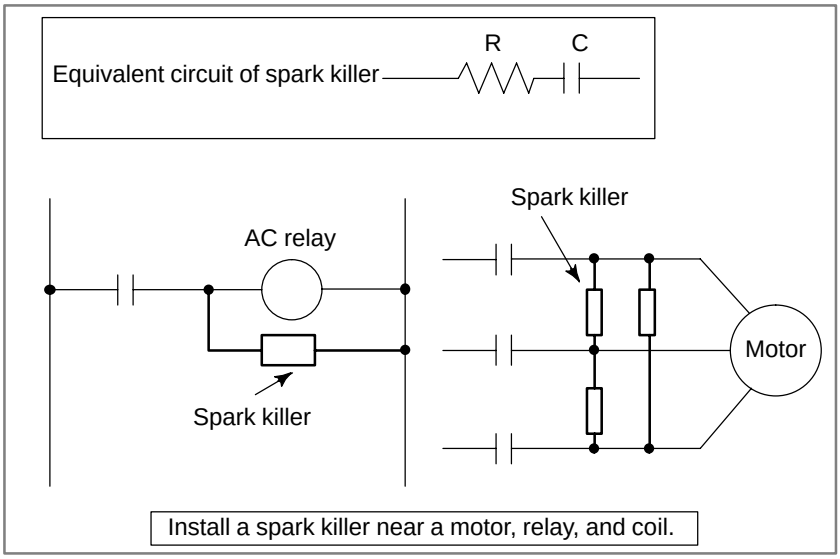

NOTE
Use a CR–type noise suppressor. A varistor has a function for clamping the peak voltage of a pulse voltage, but cannot suppress a spike–like voltage.

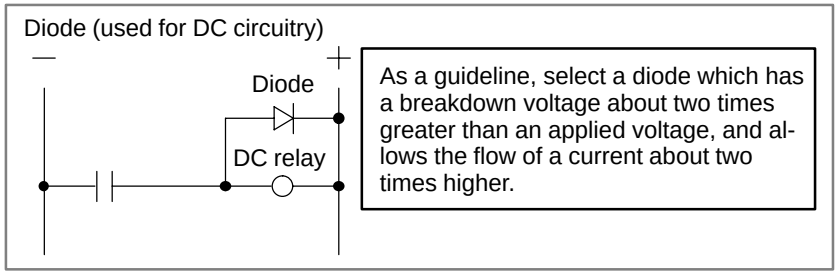

5.8.5 Cable Clamping and Shielding

According to the figure below, clamp all cables that require shielding and are run to the CNC, servo amplifier, spindle amplifier, and so forth. This clamping method not only secures cables, but also shields cables. Cable clamping and shielding are a key to stable system operation. Always perform cable clamping and shielding according to the method described here.

As shown below, peel off a part of the outer sheath of each cable so that the shield cover is exposed, then press and retain the exposed part of the shield against the ground plate with a clamp.

Install a ground plate manufactured by the machine tool builder, as shown below.

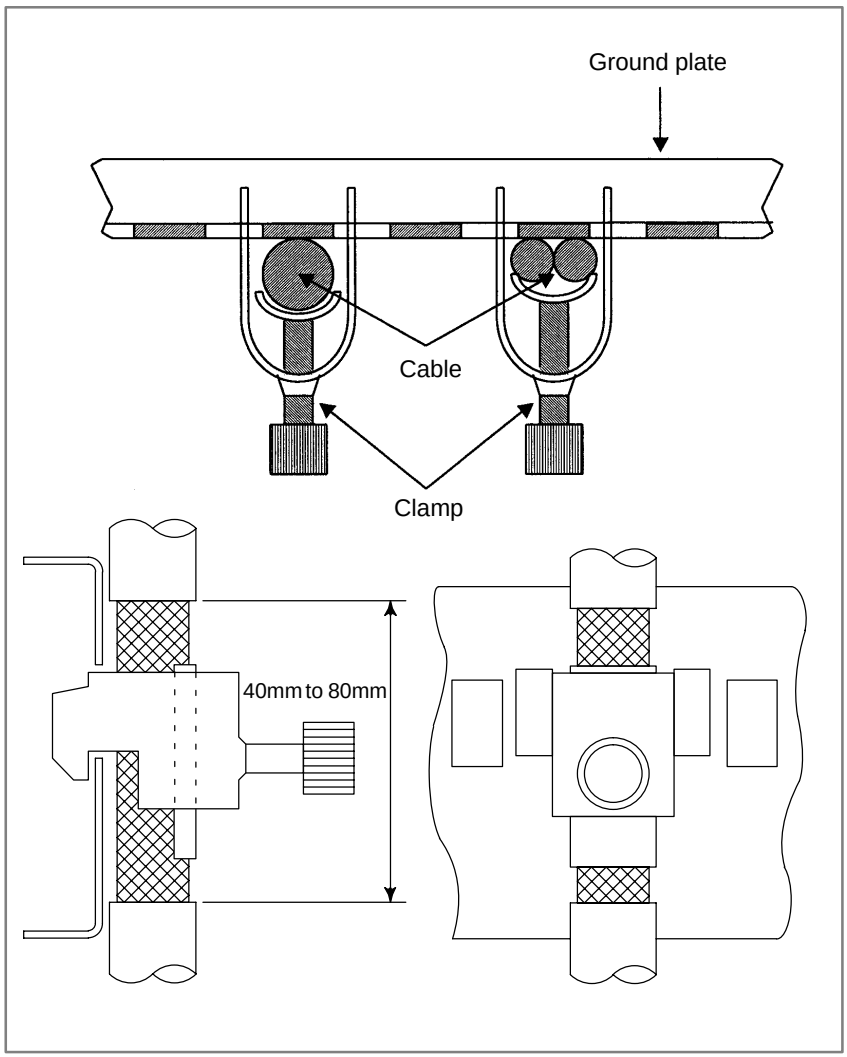

Fig. 5.8.5 (a) Cable clamp (1)

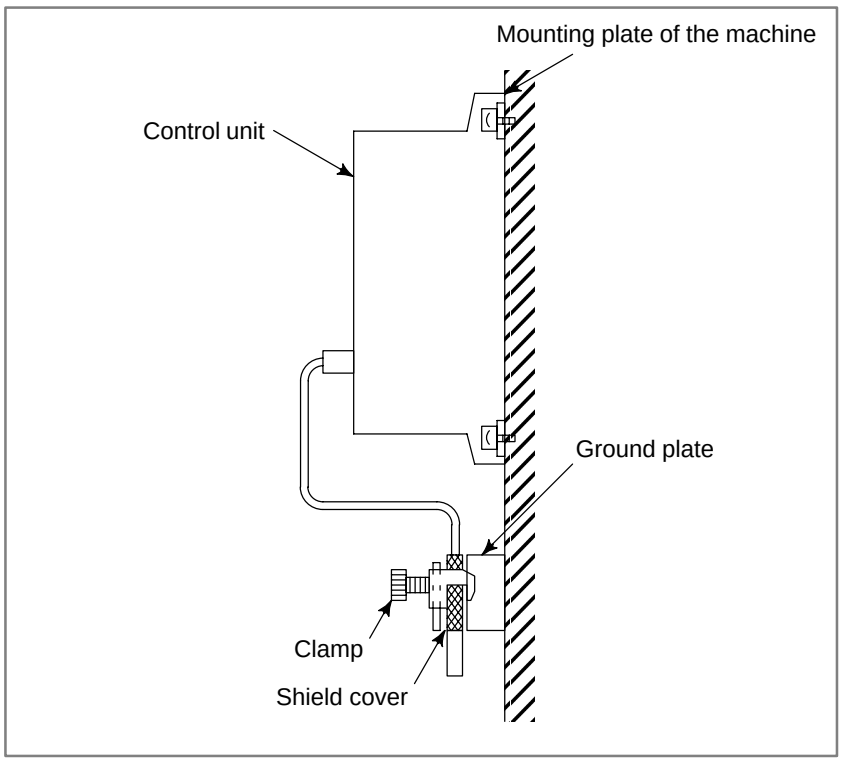

Fig. 5.8.5 (b) Cable clamp (2)

Prepare a ground plate as shown below.

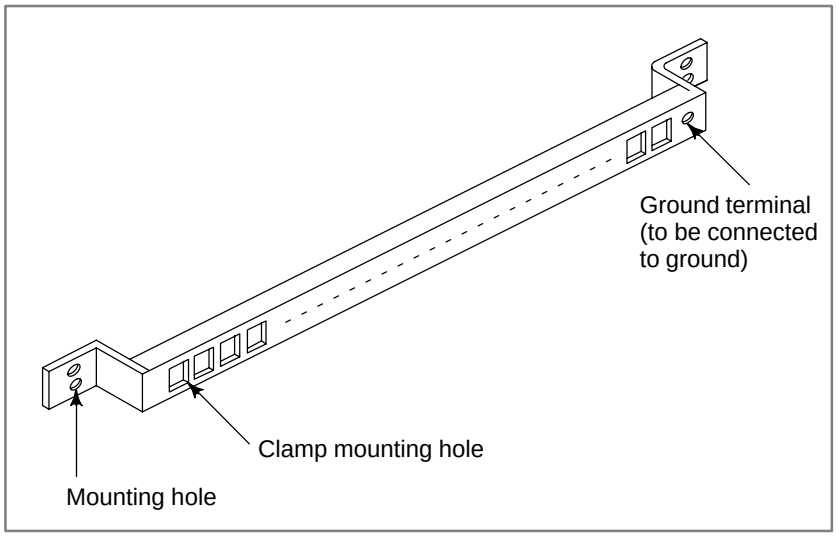

Fig. 5.8.5 (c) Ground plate

For a ground plate, use an iron plate that is as thick as 2 mm or more and is plated with nickel.

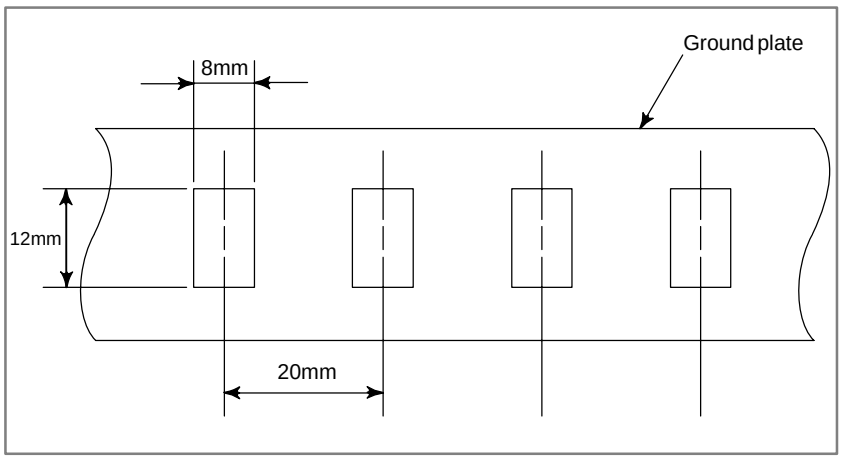

Fig. 5.8.5 (d) Ground plate hole diagram

Reference: Outline drawing of the clamp

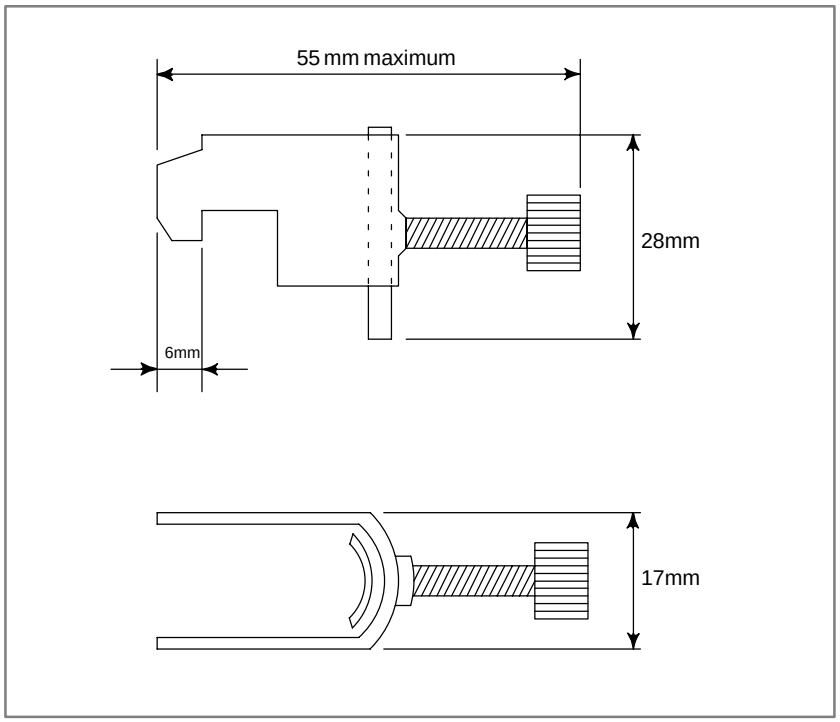

Fig. 5.8.5 (e) Outline drawing of clamp

Ordering code of the clamp: A02B–0124–K001 (set of 8 clamps)

5.9 NOTES ON USING THE MDI UNIT

An MDI unit usable with a 12.1” LCD has a connector panel that allows various interface connectors to be placed on the front. The connector panel has a cover. The cover is opened and closed when the connector panel is used. Be careful not to have your fingers caught when opening/closing (particularly opening) the cover.

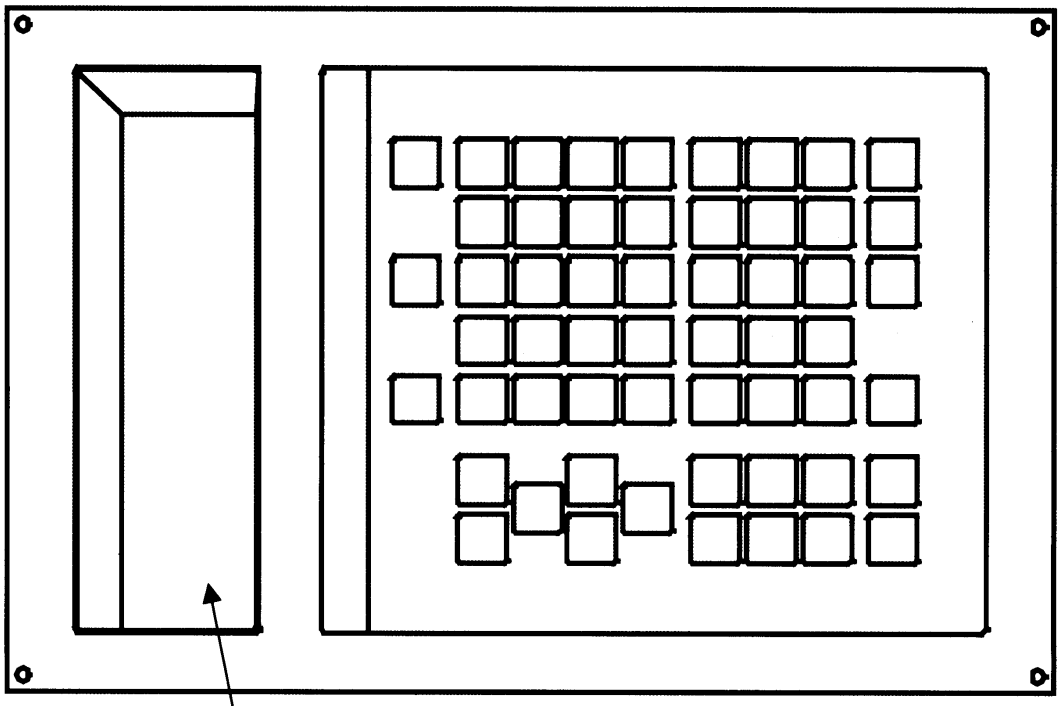

MDI unit: A02B-0236-C321#xxx

CAUTION
Be careful not to have your fingers caught when opening/closing the connector panel on the MDI unit.

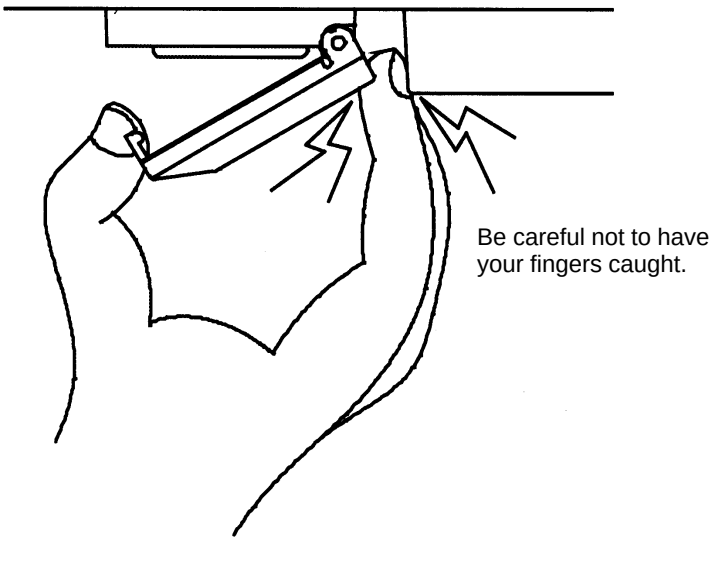

5.10 REPLACING THE MAINTENANCE PARTS OF CNC DISPLAY UNIT FOR PC FUNCTIONS AND PANEL *i*

5.10.1 Replacing the Battery

- **Ordering number**

Item	Ordering number
Lithium battery	A02B–0200–K102

- **Replacing method**

(1) After a lapse of five minutes from power up, power off the CNC display unit with PC functions or the PANEL *i*. Then remove the CNC display unit with PC functions or the PANEL *i* from the panel so that it can be accessed from the back.

(2) Remove the connector for the lithium battery, then remove the battery from the battery holder.

(3) Within five minutes, plug the connector (BAT1) for a new battery and insert a new battery.

(4) Reinstall the CNC display unit with PC functions or the PANEL *i*.

(5) Turn on the power and make sure the BIOS parameter is not cleared (no error occurs during startup).

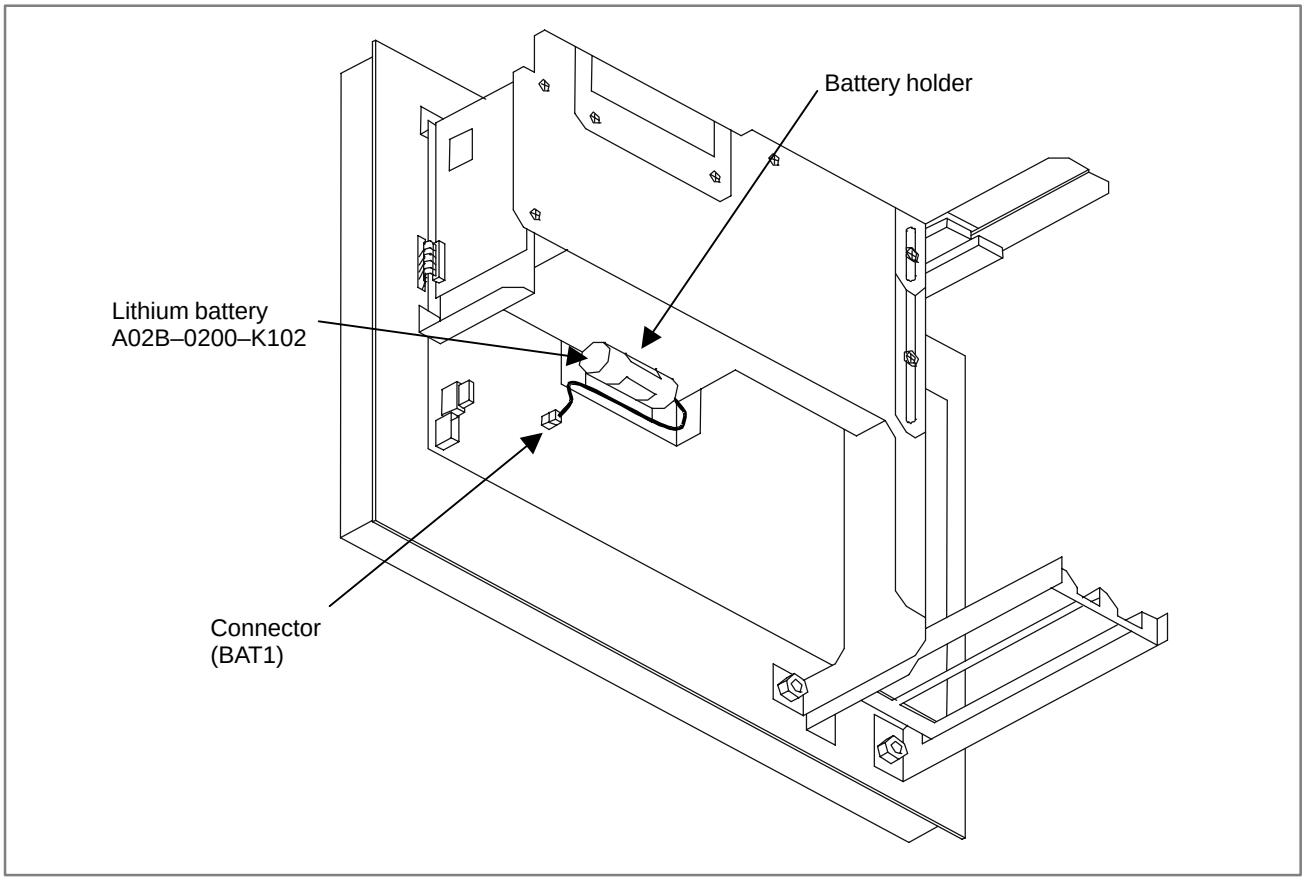

Fig. 5.10.1 Replacing the battery

NOTE
It must not take more than five minutes from the time the old battery is removed until the connector for the new battery is plugged into the connector.

When this procedure is used to replace the battery, normally the BIOS settings are not cleared. However, in case the settings are cleared, the following message appears during power up, the default BIOS settings are loaded, and the unit automatically reboots.

251: System CMOS checksum bad – Default configuration used.

Therefore, check whether the default settings of the CNC display unit with PC functions or the PANEL *i* are changed before maintenance. If the settings are cleared to the defaults, restore the BIOS settings.

5.10.2 Replacing the Fuse

WARNING
Before replacing the fuse, eliminate the cause by which the fuse blew.
Therefore, only those personnel who were well trained for maintenance and safety can perform the replacement.
When replacing the fuse with the cabinet open, be careful not to touch the part containing high–voltage circuits. Otherwise, you receive an electric shock.

A fuse blows when there is a short circuit in the CNC display unit with PC functions or the PANEL *i*. When the fuse blows, check the following points.

- A conductive part touches the main printed circuit board.
- A PCI extension board failed or is incorrectly inserted.
- A cable is incorrectly connected.

When the fuse blows, the system may suffer damage. Before turning on the power again, make visual and smell inspection to check the system for an abnormality and replace the failed parts if any.

- **Ordering number**

Item		Ordering number
Fuse	For A08B–0082–B001 to –B004, –B011 to –B014, –B031 to –B038, A13B–0193–B031 to –B038	A02B–0236–K101
	A08B–0082–B021 to –B024, –B041 to –B048, –B051 to –B058, A13B–0193–B041 to –B048, –B051 to –B058	A08B–0082–K001

- **Replacing method**

(1) Make sure the CNC display unit with PC functions or the PANEL *i* is powered off.

(2) Remove the CNC display unit with PC functions or the PANEL *i* from the panel so that it can be accessed from the back.

(3) Remove the old fuse from the socket, then securely insert a new one into it.

(4) Reinstall the CNC display unit with PC functions or the PANEL *i*.

(5) Turn on the power and verify that the CNC display unit with PC functions or the PANEL *i* starts up normally.

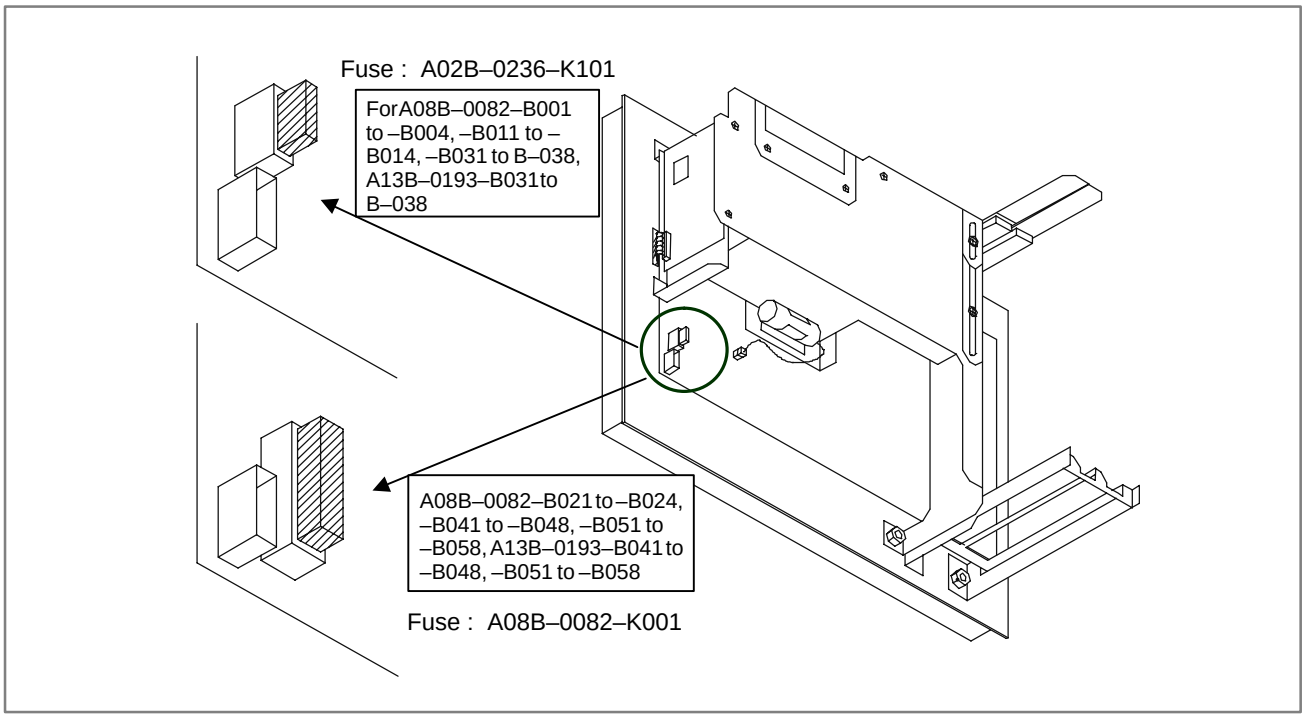

5.10.3 Replacing the Fan

- **Ordering number**

Item	Ordering number
Fan for main body	A08B–0082–K010
Fan for HDD	A13B–0178–K001

- **Replacing the fan for main body**

(1) Make sure the CNC display unit with PC functions or the PANEL *i* is powered off.

(2) Loosen the two screws (A), then remove the fan retaining metal sheet.

(3) Remove the fan connector (CN6). Since the connector is fixed with a latch, pull out the connector while opening the latch with a flatblade screwdriver, as shown below.

(4) Loosen the two screws (B), then replace the fan.

(5) Install a new fan in the unit by reversing the removal procedure. At this time, be sure to install the fan in the correct direction.

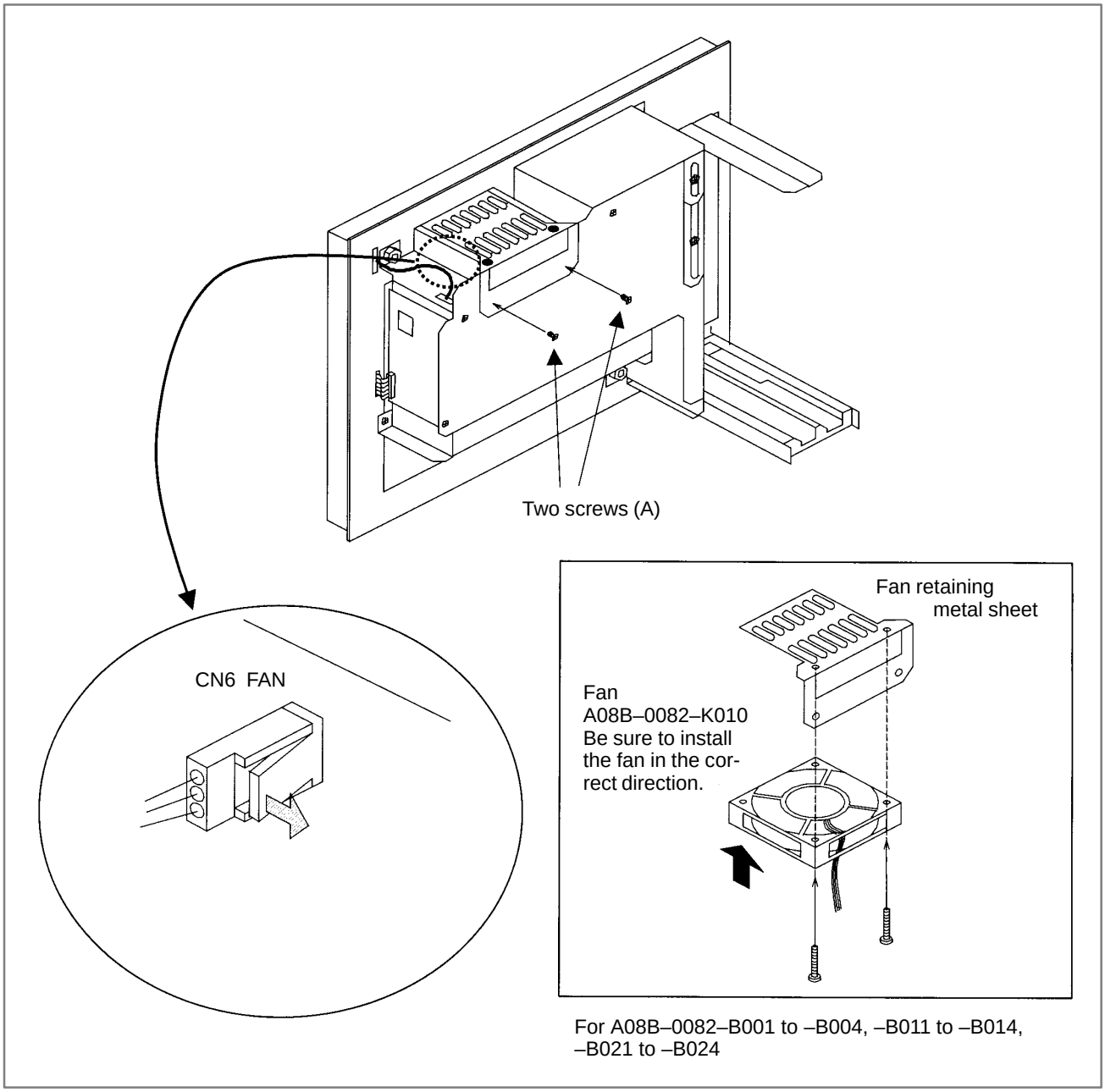

For A08B–0082–B001 to –B004, –B011 to –B014, –B021 to –B024

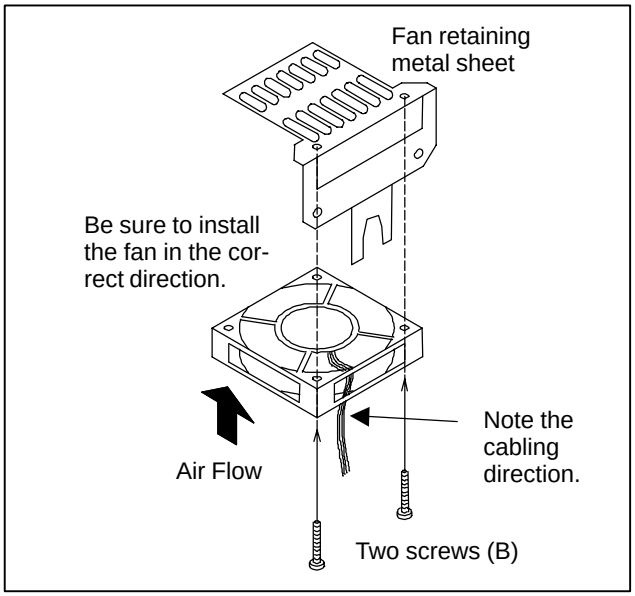

Perform wiring as shown below.

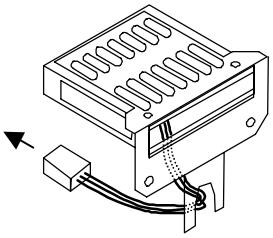

A08B–0082–B031 to –B038, –B041 to –B048, –B051 to –B057
A13B–0193–B031 to –B034, –B041 to –B044, –B051 to –B054

- **Replacing the fan for HDD**

(1) Make sure the CNC display unit with PC functions or the PANEL *i* is powered off.

(2) Remove the fan connector (CN7) on the main board. Since the connector is fixed with a latch, pull out the connector while lifting the connector lightly to open the latch.

(3) Loosen the two screws that retain the fan, then remove it.

(4) Retain a new fan with the two screws, then connect the cable to the connector (CN7).

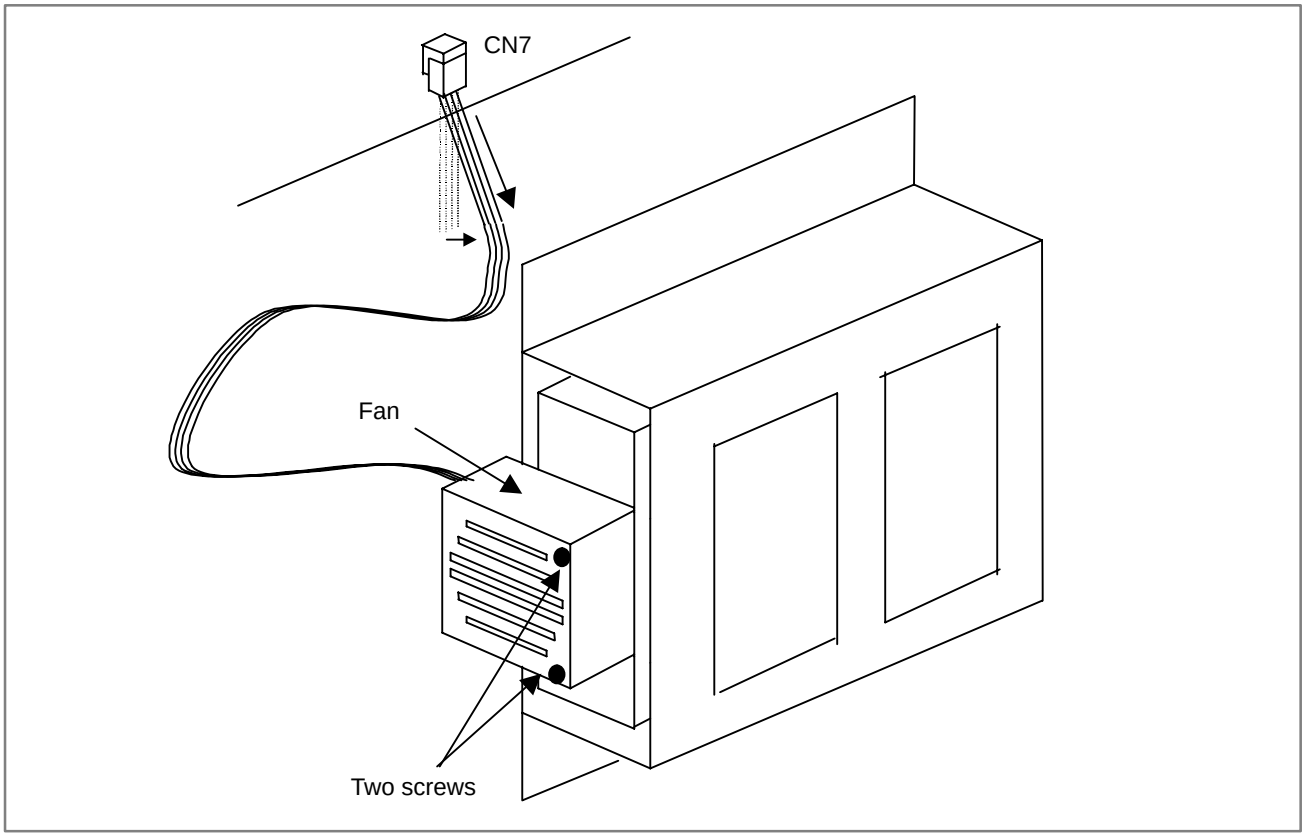

Fig 5.10.3 Replacing the FAN for HDD

5.10.4 Replacing the LCD Back–Light

LCD back–light can not be replaced for CNC display unit with PC functions or PANEL *i*.

5.10.5 Replacing the Touch Panel Protection Sheet

For the CNC display unit with PC functions or the PANEL *i*, the surface of the touch panel is covered with the protection sheet to protect it. When there are flaws and contamination on this protection sheet that make the screen hard to read, replace the protection sheet. Prepare the following items.

- **Ordering number**

Item		Ordering number
Touch panel protection sheet	For 10.4” LCD (with touch panel and soft keys)	A02B–0236–K110
	For 10.4” LCD (with touch panel, without soft keys)	A02B–0236–K130
	For 12.1” LCD	A02B–0236–K118
	For 15.0” LCD	A08B–0082–K020

- **Replacing method**

See Section 5.4, for replacing the protection sheet.

5.11 REPLACING THE MAINTENANCE PARTS OF CNC DISPLAY UNIT FOR *is* SERIES CNC

5.11.1 Replacing Procedure of Mother Board

WARNING

Only those personnel who were well trained for maintenance and safety can perform the replacement.
When removing the board with the cabinet open, be careful not to touch the part containing high–voltage circuits (⚠ indicated by the electric shock mark and covered with the electric shock prevention sheet). If you touch the part when the sheet comes off, you receive an electric shock.

<1> Loosen the four screws that retain the case, then remove the case. At this time, do not disconnect the cables for the fan and battery.

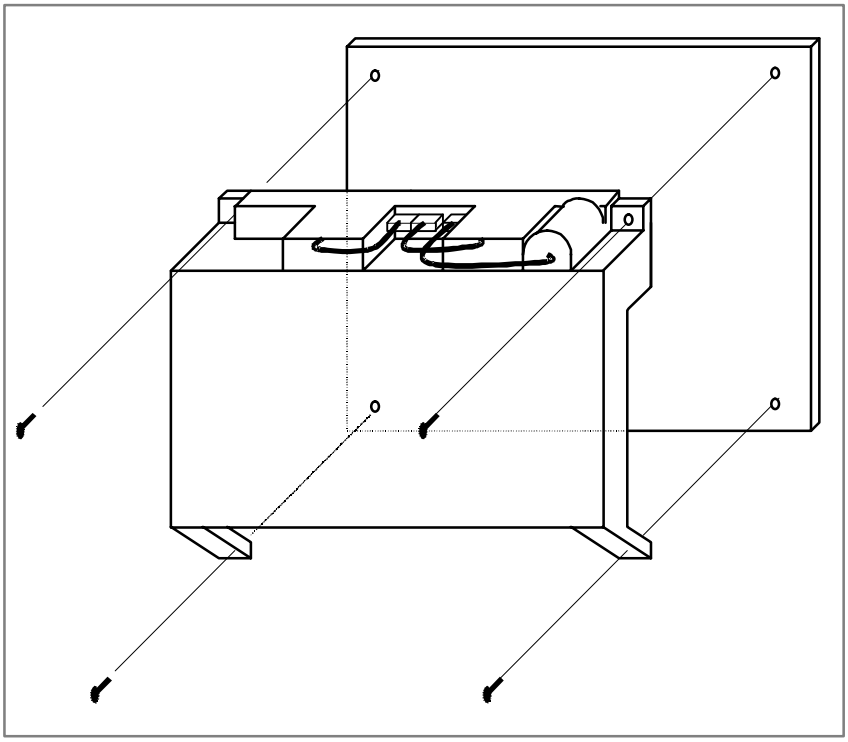

<2> Disconnect the cables from PCMCIA2 (PCMCIA interface connector), CN8 (video signal interface connector), and CN2 (soft key connector) located on the mother board. When the touch panel is attached, also disconnect TP1 (touch panel connector). Remove the screws that retain the mother board. Since connector CN3 (inverter connection connector) directly engages the mother board and the inverter printed circuit board, remove the mother board while sliding it downward.

⬭: Location of screw hole

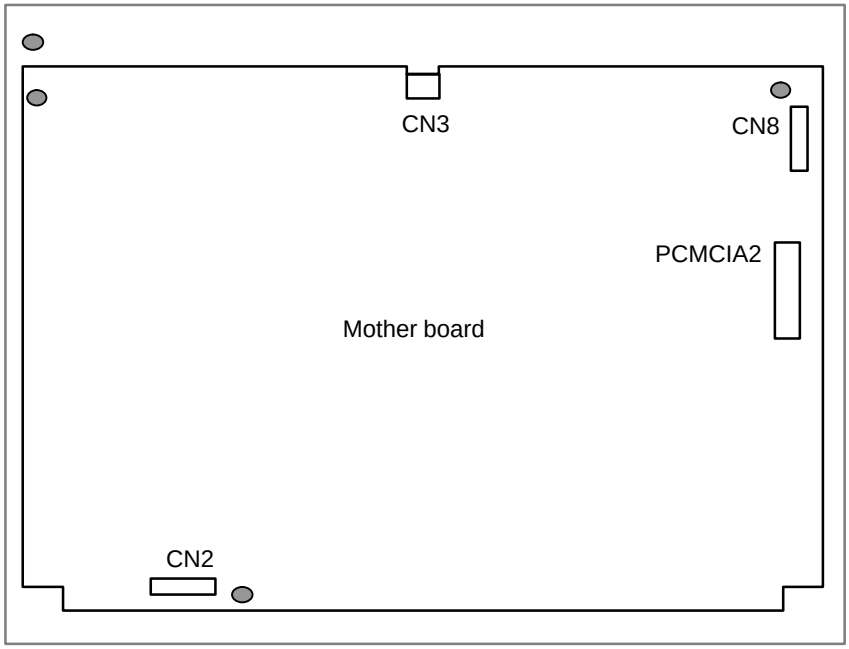

<3> To install the mother board, reverse steps <1> and <2>.

5.11.2 Replacing the Fuse

WARNING

Before replacing the fuse, eliminate the cause by which the fuse blew.
Therefore, only those personnel who were well trained for maintenance and safety can perform the replacement.
When replacing the fuse with the cabinet open, be careful not to touch the part containing high–voltage circuits (⚠ indicated by the electric shock mark and covered with the electric shock prevention sheet). If you touch the part when the sheet comes off, you receive an electric shock.

- **Ordering number of fuse** A02B–0236–K100

- **Location of Fuse**

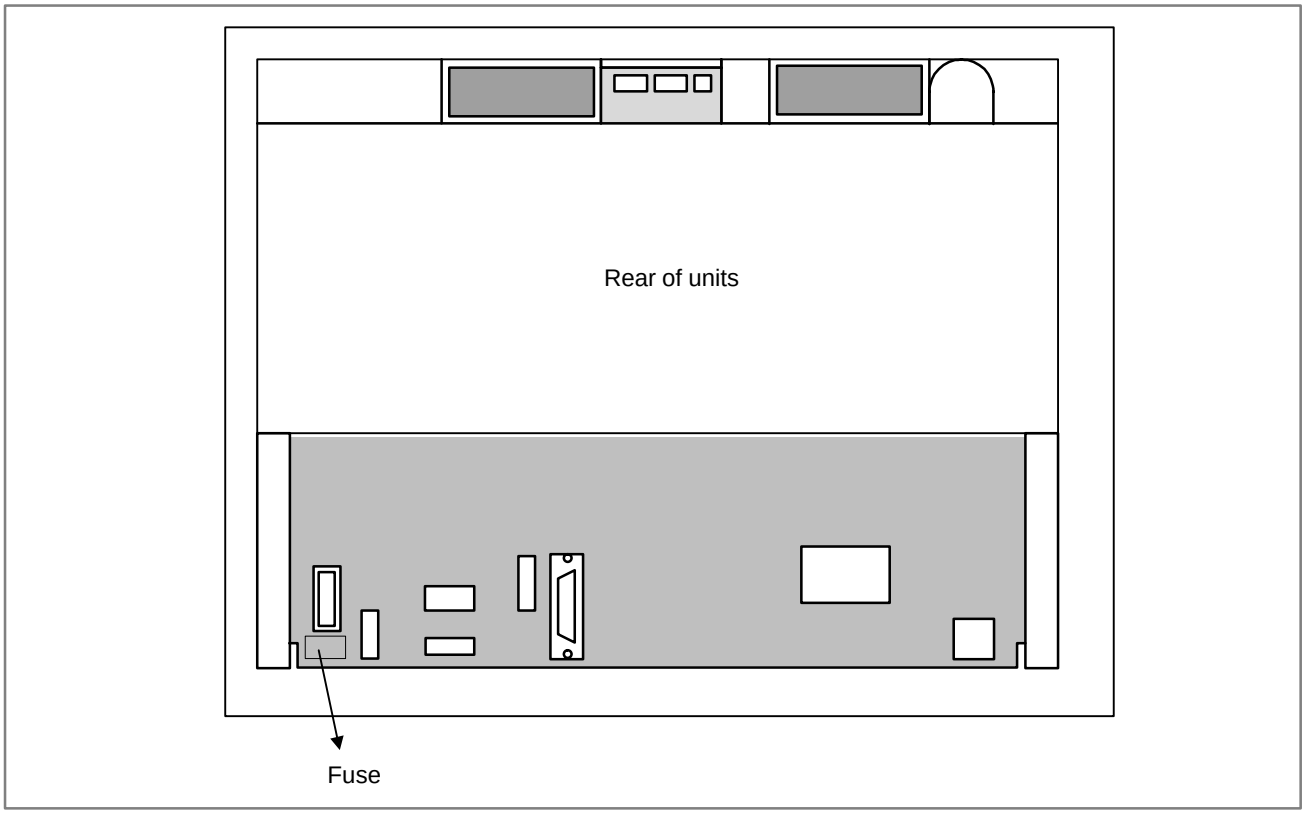

5.11.3 Replacing the Battery

Since the display unit for the *i*s series CNC has no battery, replacement is not required.

5.11.4 Replacing the Fan Motor

- **Ordering number of fan motor**

Unit	Ordering number	Required number
CNC display unit for *i*s series CNC	A02B–0236–K120	2

- **Replacing method**

See Section 2.9, ”REPLACING FAN MOTORS” for replacing the fan motor.

5.11.5 Replacing the LCD Back–Light

LCD back–light can not be replaced for CNC display unit for *i*s series CNC.

5.11.6 Replacing the Touch Panel Protection Sheet

For the LCD display unit with a touch panel, the surface of the touch panel is covered with the protection sheet to protect it. When there are flaws and contamination on this protection sheet that make the screen hard to read, replace the protection sheet. Prepare the following items.

Item		Ordering number
Touch panel protection sheet	For 10.4" LCD (with touch panel and soft keys)	A02B–0236–K110
	For 10.4" LCD (with touch panel)	A02B–0236–K130

- See Section 5.4, "LIQUID CRYSTAL DISPLAY (LCD)" for the replacement procedure.

5.11.7 Backup Unit

See Section 3.13, "BACKUP UNIT" for details on the backup unit. When the LED (LEDP) on the main printed circuit board lights, do not touch any parts in the display unit for the *i*s series CNC and the backup unit. The display unit for the *i*s series CNC operates for about 12 seconds after the main power is turned off.

6 INPUT AND OUTPUT OF DATA

After you change a SRAM module, you must set various data again. This chapter describes the procedures to input and output the parameters, the part programs and the tool offset values.

6.1 SETTING PARAMETERS FOR INPUT/OUTPUT 400
6.2 INPUTTING/OUTPUTTING DATA 402
6.3 INPUT/OUTPUT Super CAP*i* DATA 411
6.4 INPUTTING/OUTPUTTING Symbol CAP*i* T 417
6.5 DUMP/RESTORE OF Symbol CAP*i* T DATA 419
6.6 CLEARING Symbol CAP*i* T DATA 420
6.7 DATA INPUT/OUTPUT ON THE ALL IO SCREEN 422
6.8 DATA INPUT/OUTPUT USING A MEMORY CARD 437

6.1 SETTING PARAMETERS FOR INPUT/OUTPUT

- **Setting procedure of parameters**

Parameter writing is enabled with following steps 1 to 3.

1. Set to MDI mode or emergency stop state.
2. Press [OFFSET SETTING] key several times or press soft key **[SETING]** to display **SETTING (HANDY)** screen.
3. Set the cursor to **PARAMETER WRITE** and, press [1] and [INPUT] keys in this order. Here alarm 100 will be displayed.
4. Press [SYSTEM] key several times to display the following screen.

```
PARAMETER (SETTING)              O1234N12345
0000          SEQ                INI  ISO  TVC
      0    0    0    0    0    0    0    0
0001                                   FCV

      0    0    0    0    0    0    0    0
0012  RMV                 MIR
   X  0    0    0    0    0    0    0    0
   Y  0    0    0    0    0    0    0    0
   Z  0    0    0    0    0    0    0    0
   B  0    0    0    0    0    0    0    0
0020 I/O  CHANNEL
                              S    0 T0000

REF **** *** ***          10:15:30
[ F SRH ][ READ  ][       ][DELETE ][      ]
```

To make the cursor display in bit unit, press the cursor key [←] or [→].

5. Press soft key**[(OPRT)]** and the following operation menu is displayed.
   1) Soft key **[NO. SRH]** : Searched by number.
      Examination) Parameter number → **[NO. SRH]**.
   2) Soft key **[ON : 1]** : Item with cursor position is set to 1 (bit parameter)
   3) Soft key **[OFF : 0]** : Item with cursor position is set to 0 (bit parameter)
   4) Soft key **[+INPUT]** : Input value is added to the value at cursor (word type)
   5) Soft key **[INPUT]** : Input value is replaced with the value at cursor (word type)
   6) Soft key **[READ]** : Parameters are input from reader/puncher interface.
   7) Soft key **[PUNCH]** : Parameters are output to reader/puncher interface.

6. After the parameters have been input, set PARAMETER WRITE on the SETTING screen to 0. Press [RESET] to release alram 100.
7. Convenient method
   1) To change parameters in bit unit, press cursor key [←] or [→], then the cursor becomes bit length and you can set parameters bit by bit (Bit parameter only).
   2) To set data consecutively, use [EOB] key.

   (Ex.1) [1] [2] [3] [4] [EOB] [4] [5] [6] [7] [EOB] [9] [9] [9] [9] [INPUT]

   This key sequence sets data as follows:

0		1234
0	⇒	4567
0		9999
0		0

   (Ex.2) [1] [2] [3] [4] [EOB] [EOB] [9] [9] [9] [9] [INPUT]

   This key sequence sets data as follows:

0		1234
0	⇒	0
0		9999
0		0

   3) To set the same data sequentially, press [=].

   (Ex.) [1] [2] [3] [4] [EOB] [a] [EOB] [a] [INPUT]

   This key sequence sets data as follows:

0		1234
0	⇒	1234
0		1234
0		0

   4) Bit parameters can be set as follows:

   (Ex.) [1] [1] [EOB] [a] [EOB] [a] [INPUT]

   This key sequence sets data as follows:

0 0 0 0 0 0 0 0		0 0 0 1 1 0 0 0
0 0 0 0 0 0 0 0	⇒	0 0 0 1 1 0 0 0
0 0 0 0 0 0 0 0		0 0 0 1 1 0 0 0
0 0 0 0 0 0 0 0		0 0 0 0 0 0 0 0

8. After the required parameters are set, set **PARAMETER WRITE** to 0.

6.2 INPUTTING/ OUTPUTTING DATA

The main CPU memorized the following data.
Outputting the data 1/O device while the CNC is rurnning normally

(1) CNC paramter
(2) PMC parameter
(3) Pitch error compensation amount
(4) Custom macro variable values
(5) Tool compensation amount
(6) Part program (machining program, custom macro program)

6.2.1 Confirming the Parameters Required for Data Output

Be sure that data output cannot be done in an alarm status.
Parameters required for output are as follows :
In addition, ☆ indicates the standard setting for input/output devices made by FANUC. Change these settings according to the unit you actually use.
(Parameter can be changed in MDI mode or emergency stop status.)

	#7	#6	#5	#4	#3	#2	#1	#0
0000							ISO	

#1 (ISO) 0 : Output with EIA code
1 : Output with ISO code (FANUC cassette)

0020	Selection of I/O channel

☆ 0 : Channel 1 (JD36A of mother board)
1 : Channel 1 (JD36A of mother board)
2 : Channel 2 (JD36B of mother board)
3 : Channel 3 (JD38A of serial communication board)
4 : Memory card interface

NOTE
An operation example shown here assumes that data input/ output is performed with an input/output unit connected to the JD36A. (I/O channel = 0)

	#7	#6	#5	#4	#3	#2	#1	#0
0101	NFD				ASI			SB2

#7 (NFD) 0 : Feed is output when data is output.
1 : Feed is not output when data is output.

#3 (ASI)☆ 0 : EIA or ISO code is used for input/output data.
1 : ASCII code is used.

#0 (SB2) 0 : No. of stop bits is 1.
☆ 1 : No. of stop bits is 2.

0102	pecification number of input/output device

Set value	Input/output device
0	RS–232–C (Used control codes DC1 to DC4)
1	FANUC CASSETTE ADAPTOR 1 (FANUC CASSETTE B1/ B2)
2	FANUC CASSETTE ADAPTOR 3 (FANUC CASSETTE F1)
3	FANUC PROGRAM FILE Mate, FANUC FA Card Adaptor FANUC FLOPPY CASSETTE ADAPTOR, FANUC Handy File FANUC SYSTEM P-MODEL H
4	RS–232–C (Not used control codes DC1 to DC4)
5	Portable tape reader
6	FANUC PPR FANUC SYSTEM P-MODEL G, FANUC SYSTEM P-MODEL H

0103	Baud Rate

1: 50 5: 200 9: 2400
2: 100 6: 300 ☆10: 4800
3: 110 7: 600 11: 9600
4: 150 8: 1200 12: 19200 [BPS]

6.2.2 Outputting CNC Parameters

In case of PPR, steps 2 and 3 are not required.

1. Enter **EDIT** mode or the emergency stop condition.
2. [PROG] Press PROG key and soft key **PRGRM** to select a program text.
3. Press soft key **[(OPRT)]** and soft key [▷].

   And then, put out the head of file by pressing **[FSRH]** [0] **[EXEC]**.
4. Press [SYSTEM] key and soft key **[PARAM]** to display parameter screen.
5. Press soft key **[(OPRT)]** ,and soft key [▷].
6. Press soft key **[PUNCH]** and **[EXEC]**,and the parameters are started to be output.

6.2.3 Outputting PMC Parameters

1. Select MDI mode.
2. Press [OFFSET SETTING] key then soft key **[SETTING]** to select a setting screen.
3. Set the cursor to **PARAMETER WRITE** and input [1] and [INPUT]. At this time, alarm 100 will be generated.
4. Press [SYSTEM] key and soft key **[PMC]**.
5. Press soft key **[PMCPRM]** and soft key **[KEEPRL]**
6. Set the cursor to K17 and set the first bit to 1.
   [X] [X] [X] [X] [X] [X] [1] [X] [INPUT]
   Where, mark x is a former value
   Thus, data input/output screen has been selected.
7. Select EDIT mode.
8. Press soft key [◁] then key [▷].
9. Press soft key **[I/O]** and set the parameters on I/O.
   Item selection cursor moves to the following item after data of an item is set.
10. In CHANNEL NO item, input [1] [INPUT] to select I/O channel 1.
11. In DEVICE item, press soft key **[FDCAS]** to select the floppy cassette.
12. In KIND DATA item, press soft key **[PARAM]**.
13. In FUNCTION item, press soft key **[WRITE]**.
14. In FILE No item, specify a file name. In this example input as follows:
    [@] [P] [M] [C] [INPUT]
15. Press soft key **[EXEC]**. Then PMC parameters are started to be output.
16. After the PMC parameters have been output, set PARAMETER WRITE to 0.
17. Press [RESET] to release alarm 100.

6.2.4 Outputting Pitch Error Compensation Amount

1. Select EDIT mode.
2. Press [SYSTEM] key several times, press soft key **[PARAM]**, [▷] and **[PITCH]** to select the SETTING screen for pitch error amount.
3. Press soft key **[(OPRT)]** and [▷].
4. Press soft key **[PUNCH]** and **[EXEC]**, then pitch error compensation amount is started to be output.

6.2.5 Outputting Custom Macro Variable Values

When custom macro function is equipped, values of variable no. 500 and later are output.

1. Press [OFFSET SETTING] key.
2. Press [▷] key and soft key **[MACRO]** to select custom macro variable screen.
3. Press soft key **[(OPRT)]** and then key [▷].
4. Press soft key **[PUNCH]** and **[EXEC]**, then custom macro variable values are output.

6.2.6 Outputting Tool Compensation Amount

1. Select EDIT mode.
2. Press [OFFSET SETTING] key and soft key **[OFFSET]** to display the tool compensation amount screen.
3. Press **[(OPRT)]** key and soft key [▷].
4. Press soft key **[PUNCH]** an **[EXEC]** key, and the tool compensation amount is started to be output.

6.2.7 Outputting Part Program

1. Confirm the following parameters. If this parameter is set to 1, rather than the value indicated by ☆, change to MDI mode and then reset to 0. However, if you changed the parameter setting, restore the original value after finishing this work.

	#7	#6	#5	#4	#3	#2	#1	#0
3202				NE9				NE8

#4 (NE9) ☆ 0 : Programs of 9000s are edited.

1 : Programs of 9000s can be protected.

#0 (NE8) ☆ 0 : Programs of 8000s are edited.

1 : Programs of 8000s can be protected.

2. Select EDIT mode.
3. Press [PROG] key and press soft key **[PRGRM]** to display program text.
4. Press **[(OPRT)]** key and press soft key [▷].
5. Input a program number to be output. To output all programs input as: [O] [–] [9] [9] [9] [9]
6. Press **[PUNCH]** and **[EXEC]** key, then program output is started.

6.2.8 Inputting CNC Parameters

1. Set to the emergency stop state.
2. Confirm that the patameters required to input data is correct.
   In addition, ☆ indicates the standard setting for input/output devices made by FANUC. Change these settings according to the unit you actually use.
   1) Press OFFSET SETTING key several times, and press **[SETING]** to display SETTING screen.
   2) Confirm that PARAMETER WRITE=1.
   3) Press SYSTEM key to select the parameter screen.
   4)

0020	Selectionof I/O channel

☆ 0 : Channel 1 (JD36A of mother board)

1 : Channel 1 (JD36A of mother board)

2 : Channel 2 (JD36B of mother board)

3 : Channel 3 (JD38A of serial communication board)

4 : Memory card interface

5)

	#7	#6	#5	#4	#3	#2	#1	#0
0101	NFD				ASI			SB2

#7 (NFD) 0 : Feed is output when punching out.

1 : Feed is not output when punching out.

#3 (ASI) 0 : EIA or ISO code is used.

1 : ASCII code is used.

#0 (SB2) 0 : No. of stop bits is 1.

☆ 1 : No. of stop bits is 2.

6)

0102	Specification number of I/O device

Set value	Input/output device
0	RS–232–C (Used control codes DC1 to DC4)
1	FANUC CASSETTE ADAPTOR 1 (FANUC CASSETTE B1/ B2)
2	FANUC CASSETTE ADAPTOR 3 (FANUC CASSETTE F1)
3	FANUC PROGRAM FILE Mate, FANUC FA Card Adaptor FANUC FLOPPY CASSETTE ADAPTOR, FANUC Handy File FANUC SYSTEM P-MODEL H
4	RS–232–C (Not used control codes DC1 to DC4)
5	Portable tape reader
6	FANUC PPR FANUC SYSTEM P-MODEL G, FANUC SYSTEM P-MODEL H

7)

0103	Baud rate

1: 50 5: 200 9: 2400
2: 100 6: 300 ☆10: 4800
3: 110 7: 600 11: 9600
4: 150 8: 1200 12: 19200 [BPS]

3. Press soft key **[(OPRT)]** and soft key ▷
4. Press soft key **[READ]** and **[EXEC]**. Then input of parameters are started.
5. Because alarm 300 will generate for the system with absolute pulse coder, set parameter 1815#5 to 0.
6. Alarm 300 is issued if the system employs an absolute pulse coder. In such a case, perform reference position return again.

6.2.9 Inputting PMC Parameters

Set the emergency stop state.
Operation of 12 is not required when PPR is used.

1. Turn off (KEY4=1) the program protect key.
2. Press OFFSET SETTING key and soft key **[SETTING]** to select the SETTING screen.
3. Confirm that PARAMETER WRITE=1.
4. Press SYSTEM key and soft key **[PMC]**.
5. Press soft key **[PMCPRM]** and soft key **[KEEPRL]**.
6. Set the cursor to K17 and set bit 1 to 1.
   0 0 0 0 0 0 1 0 INPUT .
7. Press ◁ key and ▷ key.
8. Press soft key **[I/O]** and set the parameters required for I/O.
   Item selection cursor displays the next item after an item is set.
9. In CHANNEL item , press 1 INPUT to select channel 1.
10. In DEVICE item, press **[FDCAS]** key to select the floppy cassette.
11. In FUNCTION item, press soft key **[READ]** to input data
12. In FILE NO item, press 2 INPUT to select file no. 2.
13. Press soft key **[EXECT]** and the PMC parameters are started to be input.
14. After data has been read, turn off power and turn it on.

6.2.10 Inputting Pitch Error Compensation Amount

1. Release the emergency stop and select EDIT mode.
2. Confirm that PARAMETER WRITE=1 on the setting screen.
3. Press [PROG] key and soft key **[PRGRM**] to display program contents.
4. Press soft key **[(OPRT)]**, [▷] , **[F SRH]**, and [3] **[EXEC]** to select the pitch error compensation file.
5. Press [SYSTEM] key several times, soft key **[PARAM]**, [▷] and **[PITCH]** to select the screen for pitch error compensation amount.
6. Press soft key **[(OPRT)]** and [▷] key.
7. Press soft key **[READ**] and **[EXEC]**, then the pitch error compensation amount is started to be input.
8. After data has been input, press [OFFSET SETTING] key twice to display the SETTING screen and return the PARAMETER WRITE to 0.

6.2.11 Inputting Custom Macro Variable Values

If the system is equipped with the custom macro fucntion, input the variable values.
For PPR, item 4 is not required.

1. Confirm that EDIT mode is selected.
2. Turn off the program protect key (KEY2=1).
3. Press [PROG] key then soft key **[PRGRM]** to display program contents.
4. Press soft key **[(OPRT)]**, [▷], **[F SRH]**, and [4] **[EXEC]** to select a file.
5. Press soft key **[(OPRT)]** and key [▷].
6. Press address [O] , a program number (0001 for example), soft key **[READ]** and **[EXEC]** key, then custom macro variable values are started to be input.
   Input a program number that is not used.
7. Select MEMORY mode on the machine operator's panel and press cycle start button.
   When the program is executed, macro variables are set.
8. Press [OFFSET SETTING] key, [▷] key and soft key **[MACRO]** to select the custom macro variable screen.
9. Press 500 and soft key **[NO SRH]** to display variable number 500 and confirm the custom macro variables are set correctly.
   Of the data displayed, 0 and vacant differ in meaning.
   Vacant is an undefined variable. To set vacant, press soft key **[INPUT]**.
10. Select EDIT mode again.
11. Press [PROG] key to select the program display screen.

12. Press address O and a program number (0001 for example) ,then press DELETE to delete the program.

6.2.12 Inputting Tool Compensation Amount

Item 4 is not required for PPR.

1. Select the EDIT mode.
2. Turn off the program protect (KEY=1).
3. Press PROG key, and press soft key**[PRGRM]** to display the program contents screen.
4. Press soft key **[(OPRT)]**, ▷, **[F SRH]**, and 5 **[EXEC]** to select the tool compensation amount file.
5. Press OFFSET SETTING key, and soft key **[OFFSET]** to display the tool compensation amount screen.
6. Press soft key **[(OPRT)]** and ▷ key.
7. Press **[READ]** key and **[EXEC]** key and data input is started.

6.2.13 Inputting Part Programs

Confirm the following parameters. If the setting is different from the value indicated by ☆, reset to the specified value only during this work. (Change it in MDI mode).

	#7	#6	#5	#4	#3	#2	#1	#0
3201		NPE					RAL	

#6 (NPE) When programs are registered in part program storage area, M02,M30 and M99 are:

0 : regarded as the end of program.

☆ 1 : not regarded as the end of porgram.

#1 (RAL) When programs are registered:

☆ 0 : All programs are registered.

1 : Only one program is registered.

	#7	#6	#5	#4	#3	#2	#1	#0
3202				NE9				NE8

#4 (NE9)

☆ 0 : Programs of 9000s can be edited.

1 : Programs of 9000s are protected.

#0 (NE8)

☆ 0 : Programs of 8000s can be edited.

1 : Programs of 8000s are protected.

For PPR, item 4 is not required.

1. Confirm that mode is EDIT mode.
2. Turn off the program protect (KEY3=1).
3. Press PROG key and press soft key **[PRGRM]** to select a part program file.
4. Press soft key **[(OPRT)]**, ▷ **[F SRH]**, and 6 **[EXEC]** to select a part program file.
5. Press soft ◁ key ,**[(OPRT)]** and ▷ key.
6. Press soft key **[READ]** and **[EXEC]**, then data input is started.

6.3 INPUT/OUTPUT Super CAP*i* DATA

6.3.1 Input/Output of Conversational Data in a Lump(Super CAP*i* M)

The following operation allows all the data used for Super CAP*i* M to be input and output in a lump.

1. Confirm the parameters shown below:
   P0020: I/O CHANNEL (select I/O device) : 0
   P0102: I/O device number : 3
   P0103: Baud rate for 4800 bauds : 10
   for 9600 bauds : 11
2. Select EDIT mode.
3. Press function key PROG and press soft key **[CAP]**.
4. Press soft key **[8]** (C.A.P DATA) on the basic menu screen.Serial 16*i* Conversational Data Screen

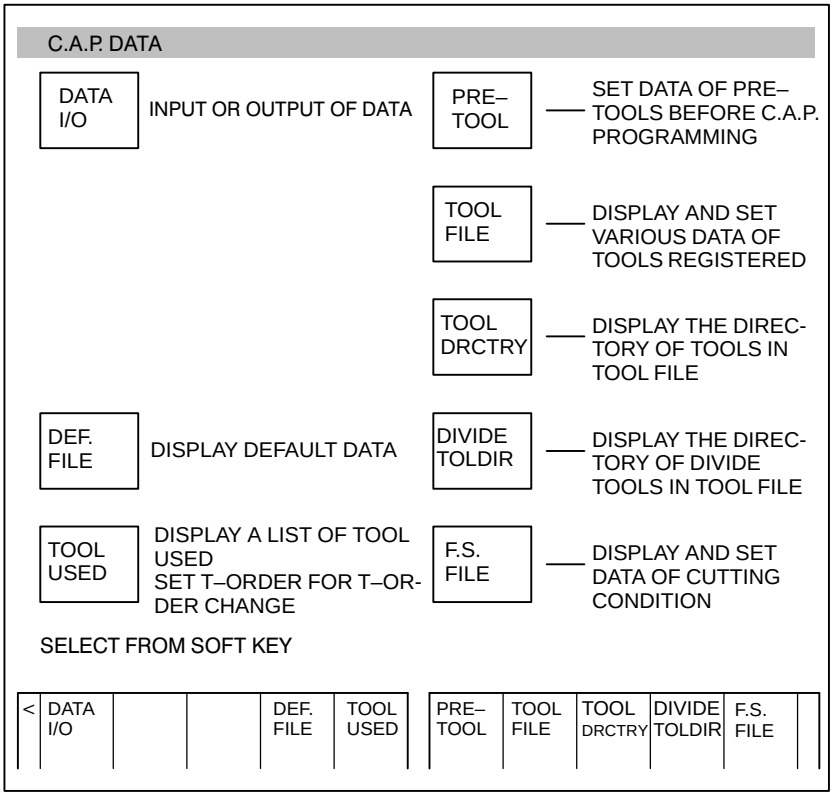

5. Press soft key **[DATA I/O]**.

Series16*i* Conversational Data Screen

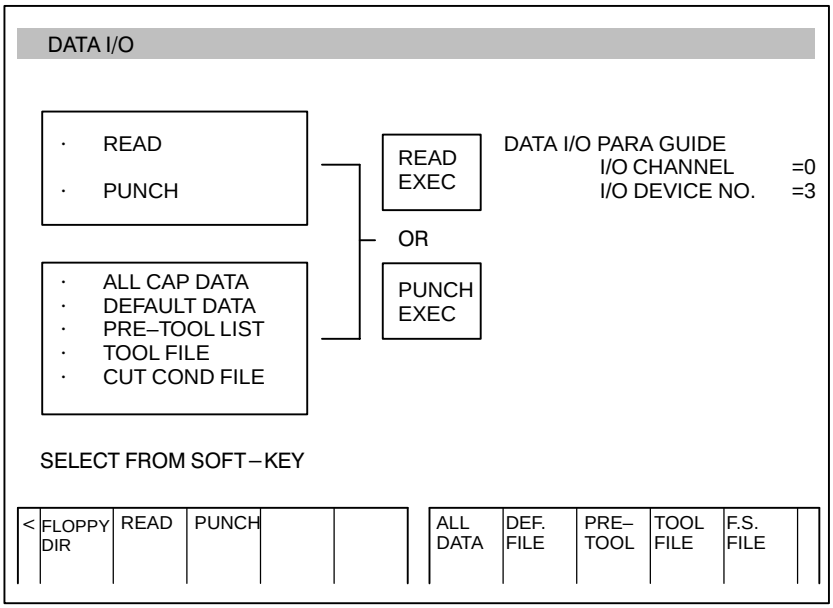

6. Press soft key [READ] or [PUNCH].
7. Press soft key **[ALL DATA]**.
8. For read, input a file no. and press soft key **[READ EXEC]**.(Specify a file no. for all data).

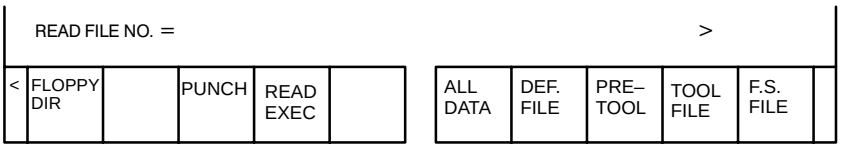

·For punch, press soft key [PUNCH EXEC].

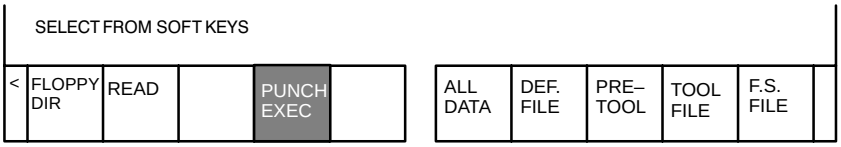

The above operation reads and punches default data, pre–tool list, tool file and F.S. file in a lump.

6.3.2 Input and Output of Each File (Super CAP*i* M)

You can input and output files individually.
Execute the same operations from step **1** to **6** in the previous section 3.3.1.

(1) Reading or Punching default files

7 Press **[DEF. FILE]**.

8 · For reading, input a file no. for default data and press soft key **[READ EXEC]**. (Specify a file number of default file).

· For punching, press **[PUNCH EXEC]**.

(2) Reading or punching pre–tool list

7 Press PRE–TOOL.

8 · For reading, press a file number and soft key **[READ EXEC]**. (Specify a file number of pre–tool list).

· For punching, press soft key **[PUNCH EXEC]**.

(3) Reading or Punching tool file

7 Press TOOL FILE.

8 · For reading, press a file number and pres soft key **[READ EXEC]**. (Specify file number of tool file).

· For punching, press **[PUNCH EXEC]**.

(4) Reading or Punching F, S file

7 Press F.S. FILE.

8 · For reading, press a file no. and press soft key **[READ EXEC]**.(Specify a file no. of F.S. FILE).

· For punching, press **[PUNCH EXEC]**.

6.3.3 Input and Output of Each File (Super CAP*i* T)

Files can be read and punched individually.

Output of conversational machining programs

Conversational machining programs can be output and saved to an external memory unit via a reader/punch interface.
Conversational machining programs can also be saved to a memory card by setting bit 7 (IO4) of parameter No. 27000 to 1.
After switching to EDIT mode, display the registered program list screen for editing. Enter the number of the machining program to be output using numeric keys, or position the cursor to the program number then press **[PUNCH]**. The following soft keys used to confirm operation are displayed.

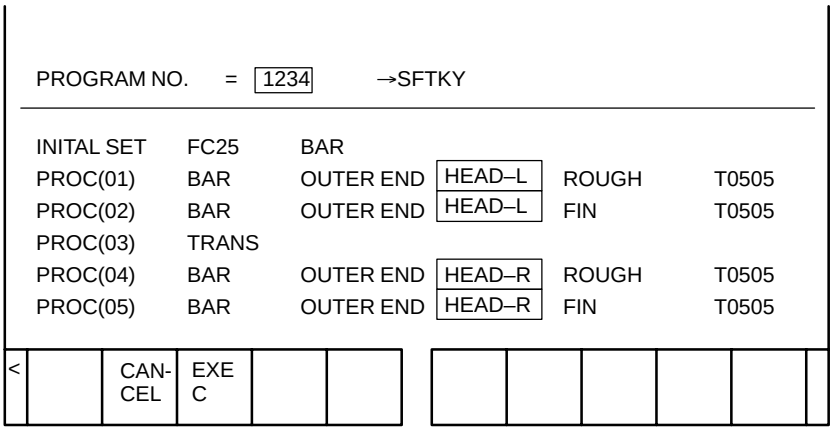

When **[EXEC]** is pressed, punch–out of the specified program starts.
When **[CANCEL]** is pressed, punch–out operation is canceled and the previous state is restored.
To output all the machining programs, specify –9999 for the program number.
When the output device is the FANUC cassette adapter, a new file is created immediately after the existing files.
Upon the start of outputting machining programs, **"OUTPUTTING"** blinks at the bottom of the screen, until the output operation ends.

NOTE
1 Only a machining program created with the conversational input function can be output by applying the above procedure.
A machining program created using the NC program screen cannot be output by applying the above procedure.
2 When a machining program is output to a memory card, the file name is CAPO****.DAT (with **** representing a specified program number). If the program number –9999 is specified, the file name is CAPALLPR.DAT.
3 When an attempt is made to output a machining program to a memory card, and a file with the same name is already present, the machining program is overwritten to the file.
4 When an attempt is made to output a machining program to a flash ROM card, and a file with the same name is already present, the machining program cannot be written to the card.

Input of conversational machining programs

The machining program punched out by applying the procedure described on the previous page can be read into the NC via a reader/punch interface. A machining program can also be read from the memory card by setting bit 7 (IO4) of parameter No. 27000. (Note, however, that only those files that are output to the memory card according to the procedure described above can be read.)
At this time, be sure to release the memory protect switch on the machine operator's panel.
Before attempting to read a program, release the memory protect switch on the machine operator's panel.
After switching to EDIT mode, display the registered program list screen for editing, then press **[READ]**. The following message prompting the user to input the file number is displayed, as well as the soft keys used to confirm operation.

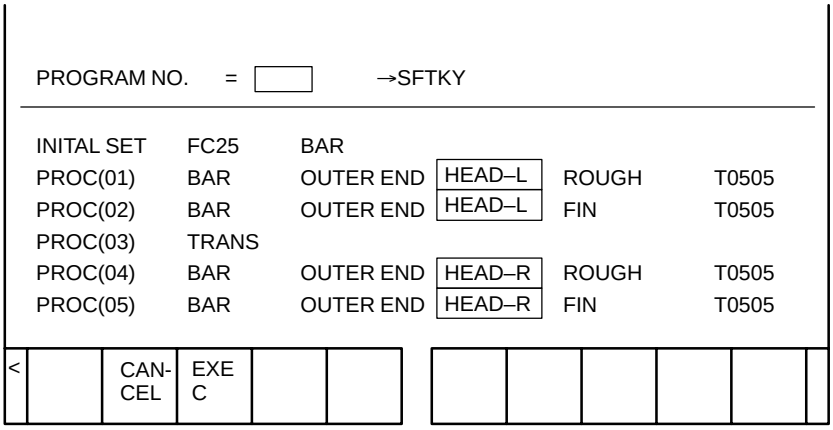

Enter the number of the file containing the machining program to be input, using numeric keys, then press **[EXEC]**. Reading of the machining program starts. When the input device is FANUC PPR, press **[EXEC]** without inputting a file number.
When **[CANCEL]** is pressed, read operation is canceled and the previous state is restored.
Upon the start of inputting machining programs, **"INPUTTING"** blinks at the bottom of the screen, until the input operation ends.

NOTE
Only a machining program created with the conversational input function can be input by applying the above procedure.
A machining program created using the NC program screen cannot be input by applying the above procedure.

Output of conversational tool setting data

The tool data file, cutting condition data, surface roughness data, pre–tool list, and chuck/tailstock figure data can be punched out to an external I/O device.

(1) Connect an external I/O device and set necessary parameters, such as device selection.

(2) Select EDIT mode.

(3) Display the tool data menu screen, then press [+]. The following soft keys appear. Press **[PUNCH]**.

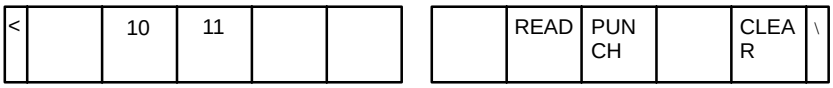

NOTE
1 When data is output to a memory card, the file name is CAPTOOL.DAT.
2 When an attempt is made to output data to a memory card, and a file with the same name is already present, the data is overwritten to the file.
3 When an attempt is made to output data to a flash ROM card, and a file with the same name is already present, the data cannot be written to the card.

Input of conversational tool setting data

The setting data punched out in the previous section can be read.

(1) Connect an external I/O device and set necessary parameters, such as device selection.

(2) Set **"PARAMETER WRITE"** in the setting data to 1.

(3) When the FANUC cassette adapter is used, set the file number for parameter No. 9887 (TLFLNO).

(4) Display the tool data menu screen and place the system in the emergency stop state.

(5) Press **[READ]**.

Clearing of conversational tool setting data

The tool data file, cutting condition data, surface roughness data, pre–tool list, and chuck/tailstock figure data can be cleared.

(1) Set **"PARAMETER WRITE"** in the setting data to 1.

(2) Display the tool data menu screen. After switching to EDIT mode, place the system in the emergency stop state.

(3) Press **[CLEAR]**.

6.4 INPUTTING/ OUTPUTTING Symbol CAP*i* T

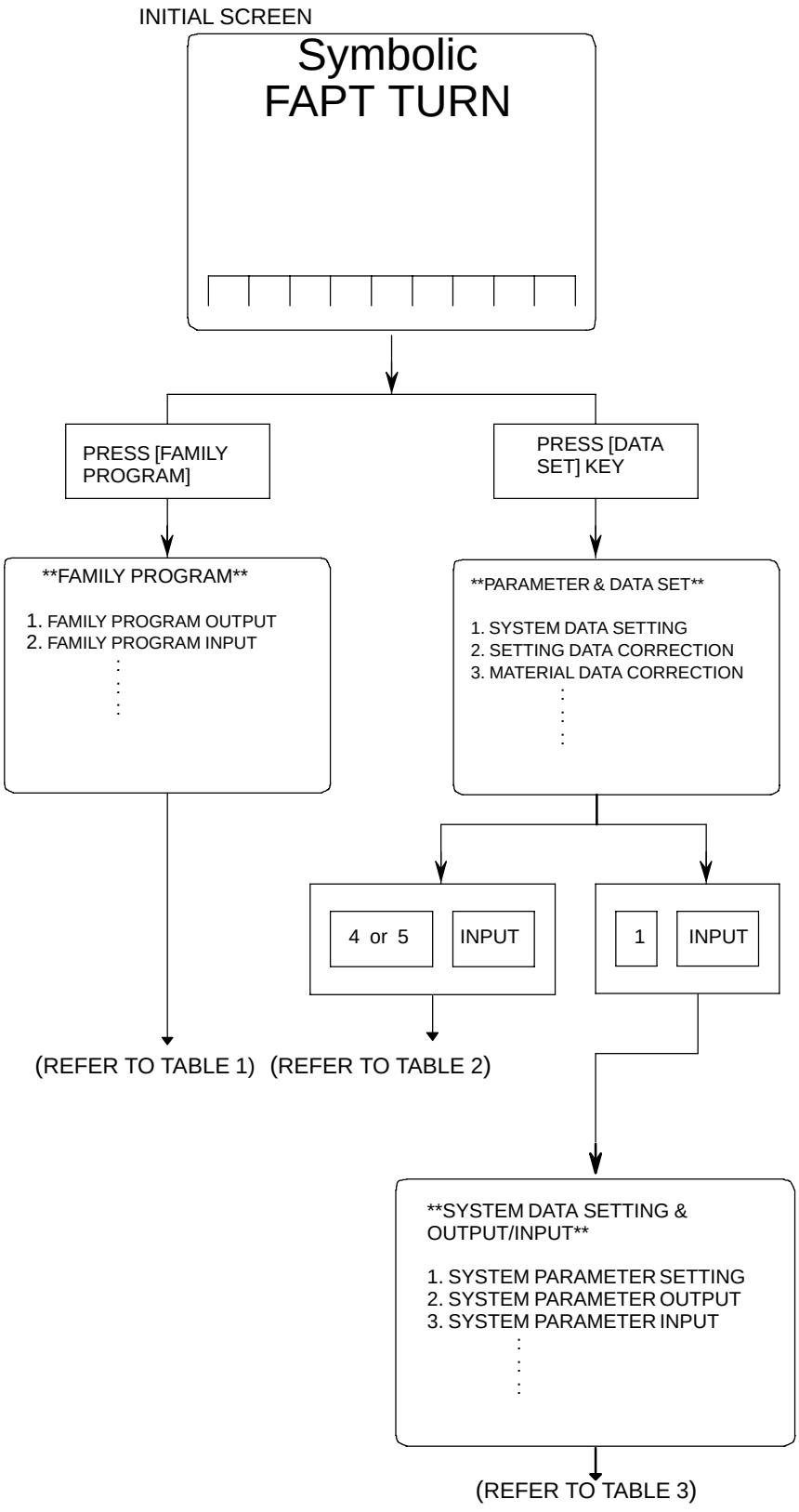

[TABLE 1] Input/Output of Family Program

I/O	Item	Operation on I/O device	Remarks
Input	Family program	2, n [INPUT]	n=P⇒FANUC PPR n=B⇒FANUC Cassette n=C⇒Sub Memory *When n is omitted, parameter no. 15 becomes valid.
	Sub cycle	5, n [INPUT]	
Output	Family program	1, n [INPUT]	
	Sub cycle	4, n [INPUT]	

[TABLE 2] Input/Output of Material Data

I/O	Item	Operation on I/O device	Remarks
Input	Material data	5, n [INPUT]	n=P⇒FANUC PPR n=B⇒FANUC Cassette n=C⇒Sub Memory *When n is omitted, parameter no. 15 becomes valid.
	Tooling information	8, n [INPUT]	
Output	Material data	4, n [INPUT]	
	Tooling information	7, n [INPUT]	

[Table 3] Input/Output of system parameters and other data.

I/O	Item	Operation on I/O device	Remarks
Input/ Read	System parameter	3, n [INPUT]	1[INPUT]⇒[SAVE END]
	MTF	7, n [INPUT]	5[INPUT]⇒[SAVE END]
	Tool data	11, n [INPUT]	9[INPUT]⇒[SAVE END]
	Setting	14, n [INPUT]	n=P⇒FANUC PPR n=B⇒FANUC Cassette
	Graphic data	16, n [INPUT]	
Out-put/ Regis-tera-tion	System parameter	2, n [INPUT]	
	MTF	6, n [INPUT]	
	Tool data	10, n [INPUT]	
	Setting	13, n [INPUT]	
	Graphic data	15, n [INPUT]	
Colla-tion	System parameter	4, n [INPUT]	
	MTF	8, n [INPUT]	
	Tool data	12, n [INPUT]	

6.5 DUMP/RESTORE OF Symbol CAP*i* T DATA

Symbol CAP*i* T data is stored in the sub–memory (SRAM) on the symbol CAP*i* T board. When replacing the symbol CAP*i* T board, perform data input/output operation according to this section.

6.5.1 Kind of Data in Sub Memory

1. System parameter (FAPT–SYS. PARAM.)
2. MTF (FAPT–MTF)
3. Setting data (FAPT–SETTING)
4. Tool data (FAPT–TOOL)
5. Graphic data (FAPT–GRAPHIC)
6. Files
   - Family program (FAPT–FAMILY)
   - Material file (FAPT–MATERIAL)
   - Tooling information (FAPT–TOOL)
   - Sub cycle file (FAPT–SUB. CYCLE)

6.5.2 Operation

● Outputting data (Dump)

1. Display the screen of Symbolic FAPT TURN.
2. To output data on FANUC Cassette, press keys as follows:
   [AUXILIARY]⇒ D U M P , B INPUT
   Be careful that data is memorized from top of the file.
   To output data on FANUC PPR, press keys as follows:
   [AUXILIARY]⇒ D U M P , P INPUT

● Inputting data (Restore)

1. Hold SP key and turn on power.
2. To input data from FANUC Cassette, press keys as follows :
   [AUXILIARY]⇒ R S T R , B INPUT
   To input data from FANUC PPR, press keys as follows :
   [AUXILIARY]⇒ R S T R , P INPUT
3. Turn off the power once.

6.6 CLEARING Symbol CAP*i* T DATA

6.6.1 Deleting File Name and Files

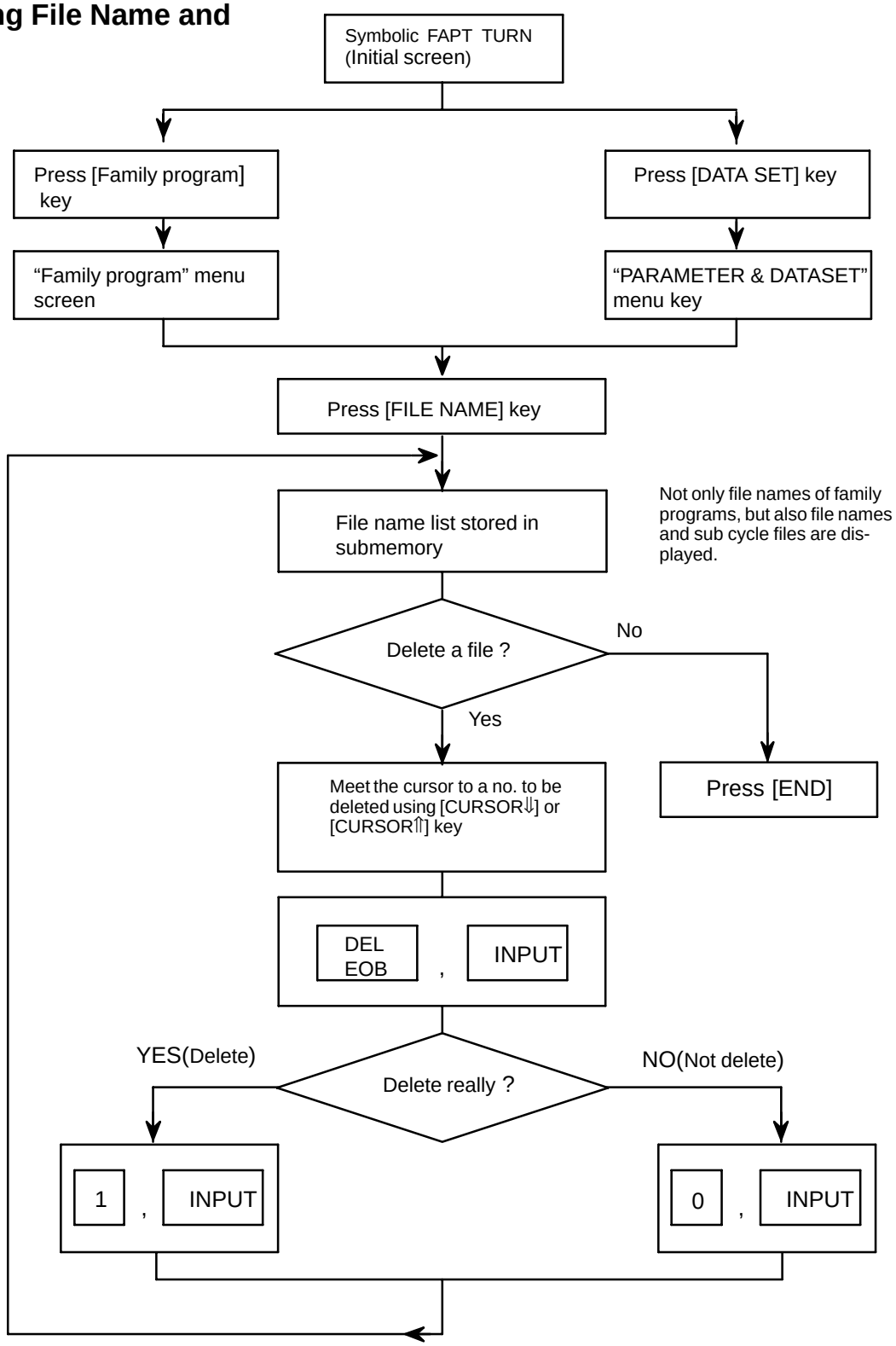

6.6.2 Clearing Symbol CAP*i* T Memory

Press SP while turning on power.

6.7 DATA INPUT/OUTPUT ON THE ALL IO SCREEN

To input/output a particular type of data, the corresponding screen is usually selected. For example, the parameter screen is used for parameter input from or output to an external input/output unit, while the program screen is used for program input or output. However, programs, parameters, offset data, and macro variables can all be input and output using a single common screen, that is, the ALL IO screen.

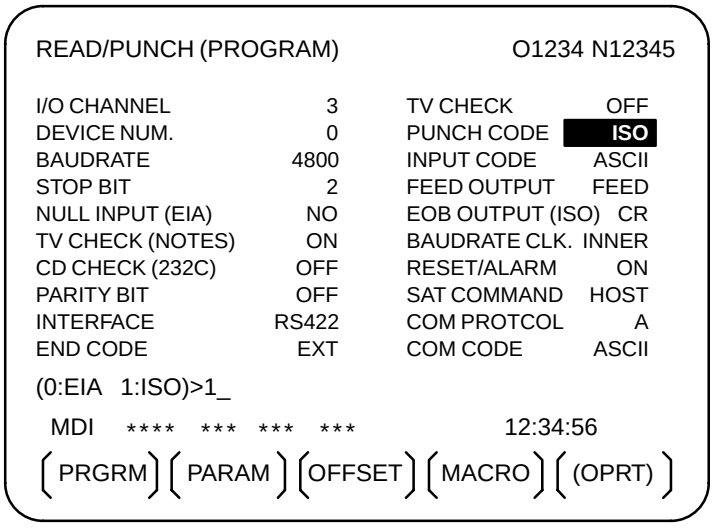

Fig. 6.7 ALL IO screen (when channel 3 is being used for input/output)

6.7.1 Setting Input/Output–Related Parameters

Input/output–related parameters can be set on the ALL IO screen. Parameters can be set, regardless of the mode.

Setting input/output–related parameters

Procedure

1 Press function key [SYSTEM] .

2 Press the rightmost soft key [▷] (continuous menu key) several times.

3 Press soft key **[ALL IO]** to display the ALL IO screen.

NOTE
1 If program or floppy is selected in EDIT mode, the program directory or floppy screen is displayed.
2 When the power is first turned on, program is selected by default.

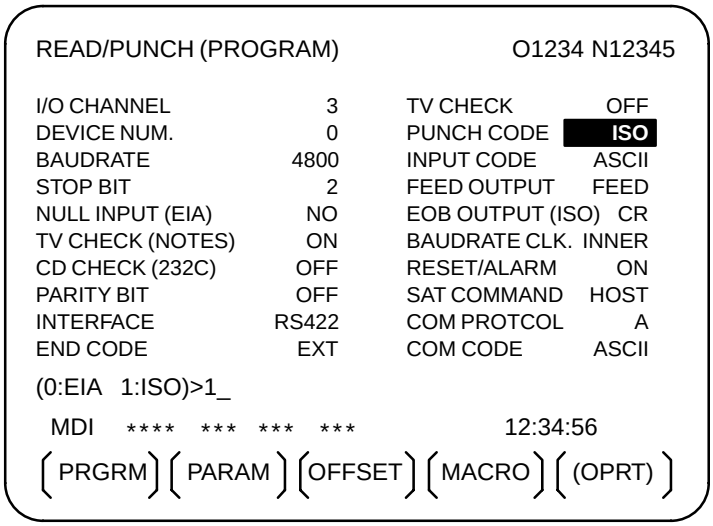

NOTE
Baud rate clock, CD check (232C), reset/alarm report, and the parity bit for parameter No. 134, as well as the communication code, end code, communication protocol, interface, and SAT command for parameter No. 135 are displayed only when channel 3 is being used for input/output.

4 Select the soft key corresponding to the desired type of data (program, parameter, and so forth).

5 Set the parameters corresponding to the type of input/output unit to be used. (Parameter setting is possible regardless of the mode.)

Tip

First, set an I/O channel. The parameters on this screen change to those corresponding to a specified I/O channel.

- I/O channel (0 to 3)

Setting	Corresponding parameter
0	No. 101 to 103
1	No. 111 to 113
2	No. 121 to 123
3	No. 131 to 135

- Device number

Setting	Input/output device
0	RS–232–C (The control codes DC1 through DC4 are used.)
1	FANUC CASSETTE ADAPTOR 1 (FANUC CASSETTE B1/B2)
2	FANUC CASSETTE ADAPTOR 3 (FANUC CASSETTE F1)
3	FANUC PROGRAM FILE MATE, FANUC FA Card Adaptor FANUC FLOPPY CASSETTE ADAPTOR, FANUC Handy File FANUC SYSTEM P–MODEL H
4	RS–232–C (The control codes DC1 through DC4 are not used.)
5	Portable tape reader
6	FANUC PPR FANUC SYSTEM P–MODEL G, FANUC SYSTEM P–MODEL H

- Baud rate (bps)

Set a desired baud rate value indicated below.

Baud rate (bps)
50
100
110
150
200
300
600
1200
2400
4800
9600
19200

6.7.2 Inputting and Outputting Programs

A program can be input and output using the ALL IO screen.
When entering a program using a cassette or card, the user must specify the input file containing the program (file search).

File search

Procedure

1 Press soft key **[PRGRM]** on the ALL IO screen, described in Section 6.7.1.

2 Select **EDIT** mode. A program directory is displayed.

3 Press soft key **[(OPRT)]**. The screen and soft keys change as shown below.

- A program directory is displayed only in EDIT mode. In all other modes, the ALL IO screen is displayed.

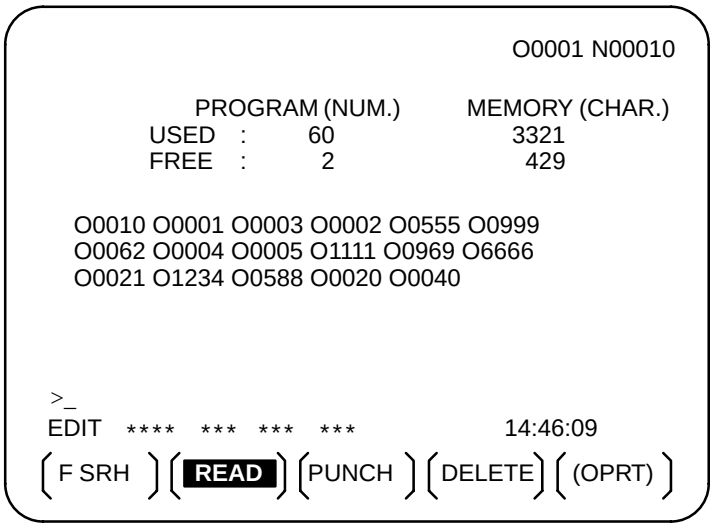

4 Enter address N.

5 Enter the number of the file to be found.

- N0
  The first floppy file is found.
- One of N1 to N9999
  Among the files numbered from 1 to 9999, a specified file is found.
- N–9999
  The file immediately after that used most recently is found.
- N–9998
  When –9998 is specified, the next file is found. Then, each time a file input/output operation is performed, N–9999 is automatically inserted. This means that subsequent files can be sequentially found automatically.
  This state is canceled by specifying N0, N1 to N9999, or N–9999, or upon a reset.

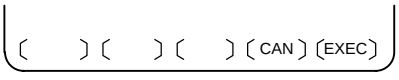

6 Press soft keys **[F SRH]** and **[EXEC**].
The specified file is found.

Inputting a program

Procedure

1 Press soft key **[PRGRM]** on the ALL IO screen, described in Section 6.7.1.

2 Select EDIT mode. A program directory is displayed.

3 Press soft key **[(OPRT)]**. The screen and soft keys change as shown below.

- A program directory is displayed only in EDIT mode. In all other modes, the ALL IO screen is displayed.

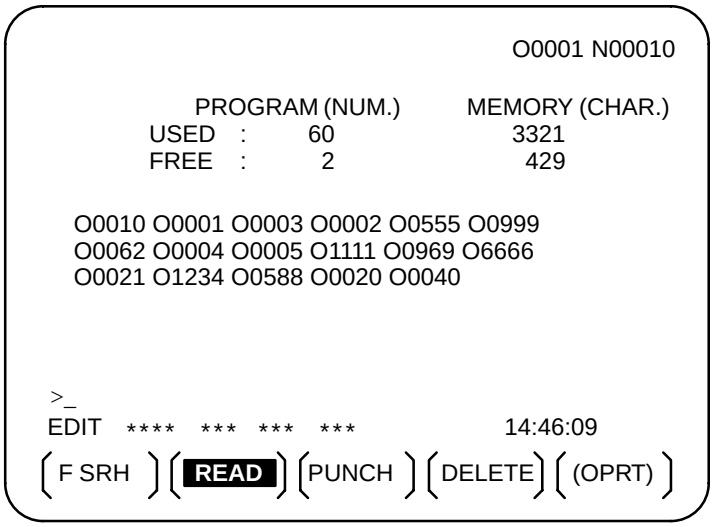

4 To specify a program number to be assigned to an input program, enter address O, followed by the desired program number.
If no program number is specified, the program number in the file or on the NC tape is assigned as is.

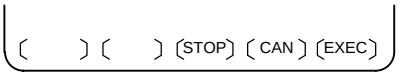

5 Press soft key **[READ]**, then **[EXEC]**.
The program is input with the program number specified in step **4** assigned.
To cancel input, press soft key **[CAN]**.
To stop input prior to its completion, press soft key **[STOP]**.

Outputting programs

Procedure

1 Press soft key **[PRGRM]** on the ALL IO screen, described in Section 6.7.1.

2 Select EDIT mode. A program directory is displayed.

3 Press soft key **[(OPRT)]**. The screen and soft keys change as shown below.

- A program directory is displayed only in EDIT mode. In all other modes, the ALL IO screen is displayed.

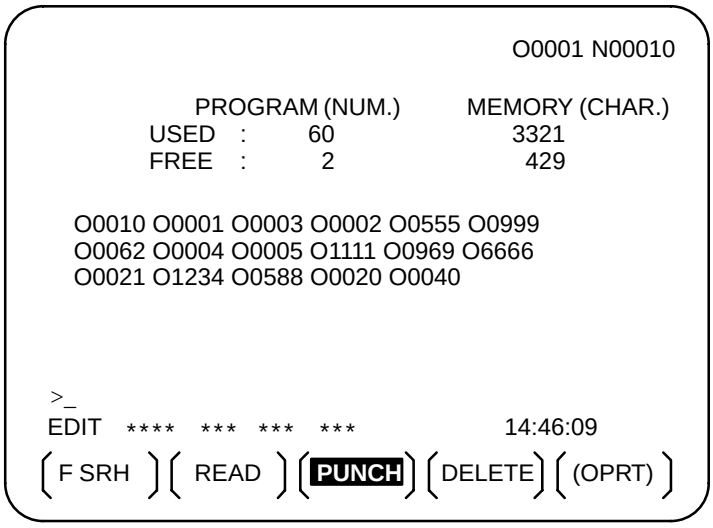

4 Enter address O.

5 Enter a desired program number.
If –9999 is entered, all programs in memory are output.
To output a range of programs, enter OΔΔΔΔ, O□□□□.. The programs numbered from ΔΔΔΔ to □□□□ are output.
When bit 4 (SOR) of parameter No. 3107 for sorted display is set to 1 on the program library screen, programs are output in order, starting from those having the smallest program numbers.

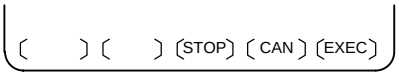

6 Press soft key **[PUNCH]**, then **[EXEC]**.
The specified program or programs are output. If steps **4** and **5** are omitted, the currently selected program is output.
To cancel output, press soft key **[CAN]**.
To stop output prior to its completion, press soft key **[STOP]**.

Deleting files

Procedure

1 Press soft key **[PRGRM]** on the ALL IO screen, described in Section 6.7.1.

2 Select EDIT mode. A program directory is displayed.

3 Press soft key **[(OPRT)]**. The screen and soft keys change as shown below.

- A program directory is displayed only in EDIT mode. In all other modes, the ALL IO screen is displayed.

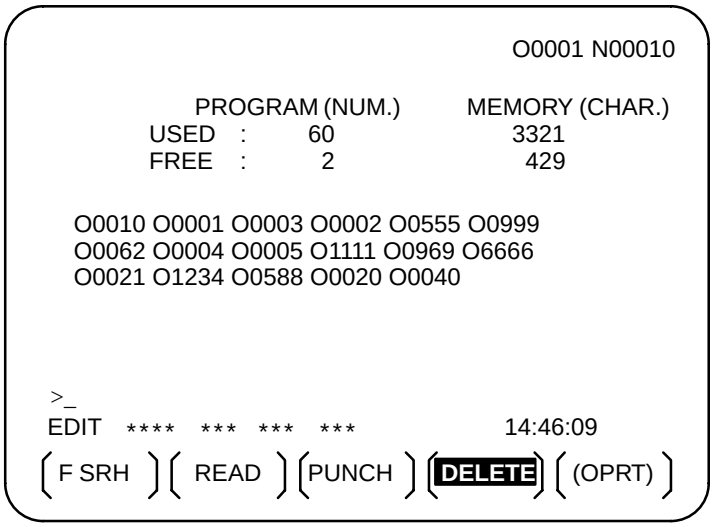

4 Press soft key **[DELETE]**.

5 Enter a file number, from 1 to 9999, to indicate the file to be deleted.

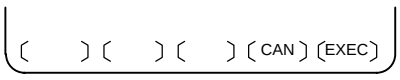

6 Press soft key **[EXEC]**.
The k–th file, specified in step 5, is deleted.

6.7.3 Inputting and Outputting Parameters

Parameters can be input and output using the ALL IO screen.

Inputting parameters

Procedure

1 Press soft key **[PARAM]** on the ALL IO screen, described in Section 6.7.1.

2 Select EDIT mode.

3 Press soft key **[(OPRT)]**. Soft keys change as shown below.

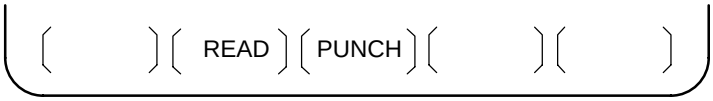

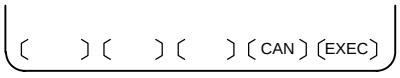

4 Press soft key **[READ]**, then **[EXEC]**.
The parameters are read, and the “INPUT” indicator blinks at the lower–right corner of the screen. Upon the completion of input, the “INPUT” indicator is cleared from the screen.
To cancel input, press soft key **[CAN]**.

Outputting parameters

Procedure

1 Press soft key **[PARAM]** on the ALL IO screen, described in Section 6.7.1.

2 Select EDIT mode.

3 Press soft key **[(OPRT)]**. Soft keys change as shown below.

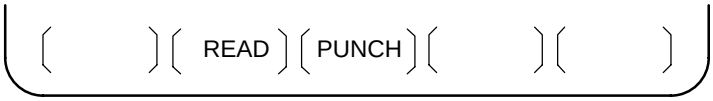

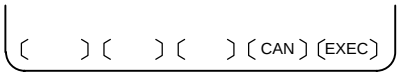

4 Press soft key **[PUNCH]**, then **[EXEC]**.
The parameters are output, and the “OUTPUT” indicator blinks at the lower–right corner of the screen. Upon the completion of output, the “OUTPUT” indicator is cleared from the screen.
To cancel output, press soft key **[CAN]**.

6.7.4 Inputting and Outputting Offset Data

Offset data can be input and output using the ALL IO screen.

Inputting offset data

Procedure

1 Press soft key **[OFFSET]** on the ALL IO screen, described in Section 6.7.1.

2 Select EDIT mode.

3 Press soft key **[(OPRT)]**. Soft keys change as shown below.

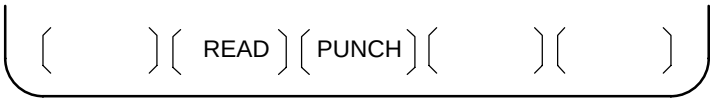

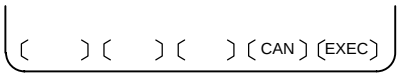

4 Press soft key **[READ]**, then **[EXEC]**.
The offset data is read, and the “INPUT” indicator blinks at the lower–right corner of the screen.
Upon the completion of input, the “INPUT” indicator is cleared from the screen.
To cancel input, press soft key **[CAN]**.

Outputting offset data

Procedure

1 Press soft key **[OFFSET]** on the ALL IO screen, described in Section 6.7.1.

2 Select EDIT mode.

3 Press soft key **[(OPRT)]**. Soft keys change as shown below.

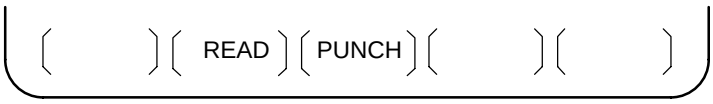

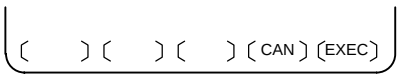

4 Press soft key **[PUNCH]**, then **[EXEC]**.
The offset data is output, and the “OUTPUT” indicator blinks at the lower–right corner of the screen. Upon the completion of output, the “OUTPUT” indicator is cleared from the screen.
To cancel output, press soft key **[CAN**].

6.7.5 Outputting Custom Macro Common Variables

Custom macro common variables can be output using the ALL IO screen.

Outputting custom macro common variables

Procedure

1 Press soft key **[MACRO]** on the ALL IO screen, described in Section 6.7.1.

2 Select EDIT mode.

3 Press soft key **[(OPRT)]**. Soft keys change as shown below.

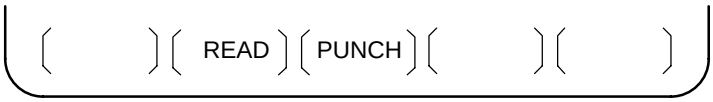

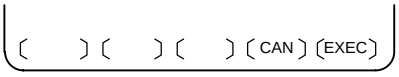

4 Press soft key **[PUNCH]**, then **[EXEC]**.
The custom macro common variables are output, and the “OUTPUT” indicator blinks at the lower–right corner of the screen. Upon the completion of output, the “OUTPUT” indicator is cleared from the screen.
To cancel output, press soft key **[CAN]**.

NOTE
To input a macro variable, read the desired custom macro statement as a program, then execute the program.

6.7.6 Inputting and Outputting Floppy Files

The ALL IO screen supports the display of a directory of floppy files, as well as the input and output of floppy files.

Displaying a file directory

Procedure

1 Press the rightmost soft key [▷] (continuous menu key) on the ALL IO screen, described in Section 6.7.1.

2 Press soft key **[FLOPPY**].

3 Select EDIT mode. The floppy screen is displayed.

4 Press soft key **[(OPRT)]**. The screen and soft keys change as shown below.

- The floppy screen is displayed only in EDIT mode. In all other modes, the ALL IO screen is displayed.

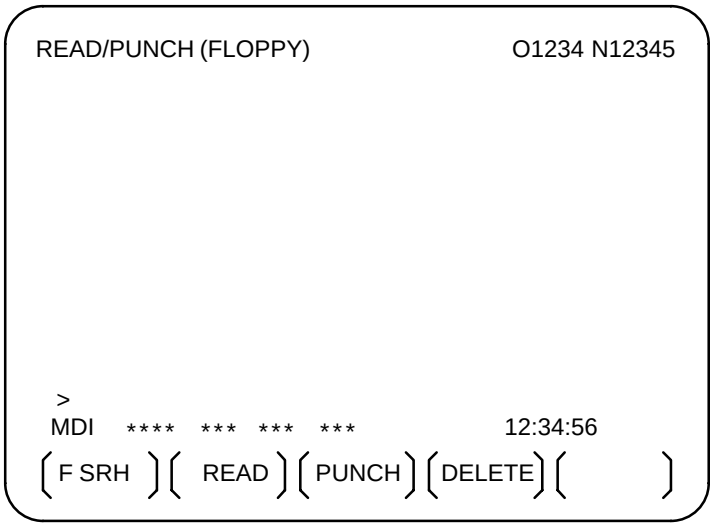

5 Press soft key **[F SRH]**.

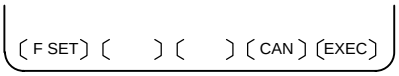

6 Enter the number of the desired file, then press soft key **[F SET]**.

7 Press soft key **[EXEC]**. A directory is displayed, with the specified file uppermost. Subsequent files in the directory can be displayed by pressing the page key.

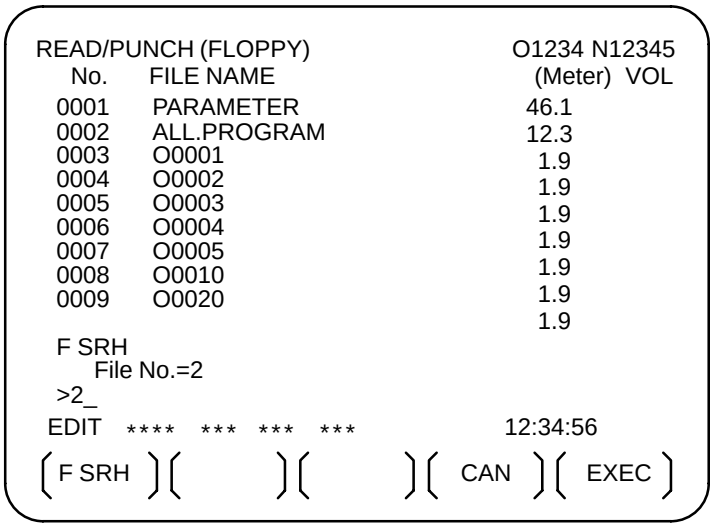

A directory in which the first file is uppermost can be displayed simply by pressing the page key. (Soft key **[F SRH]** need not be pressed.)

Inputting a file

Procedure

1 Press the rightmost soft key [▷] (continuous menu key) on the ALL IO screen, described in Section 6.7.1.

2 Press soft key **[FLOPPY]**.

3 Select EDIT mode. The floppy screen is displayed.

4 Press soft key **[(OPRT)]**. The screen and soft keys change as shown below.
The floppy screen is displayed only in EDIT mode. In all other modes, the ALL IO screen is displayed.

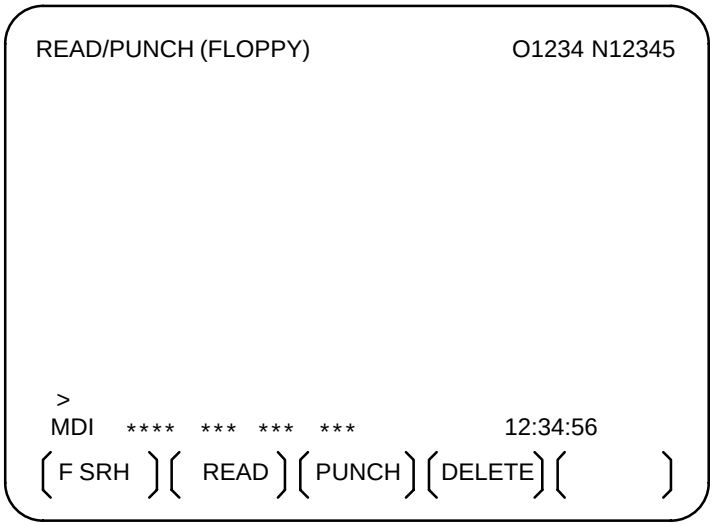

5 Press soft key **[READ]**.

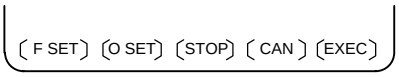

6 Enter the number of a file or program to be input.

- Setting a file number: Enter the number of the desired file, then press soft key **[F SET]**.
- Setting a program number: Enter the number of the desired program, then press soft key **[O SET]**.

7 Press soft key **[EXEC]**.
The specified file or program is read, and the “INPUT” indicator blinks at the lower–right corner of the screen. Upon the completion of input, the “INPUT” indicator is cleared from the screen.

Outputting a file

Procedure

1 Press the rightmost soft key [▷] (continuous menu key) on the ALL IO screen, described in Section 6.7.1.

2 Press soft key **[FLOPPY]**.

3 Select EDIT mode. The floppy screen is displayed.

4 Press soft key **[(OPRT)]**. The screen and soft keys change as shown below.
The floppy screen is displayed only in EDIT mode. In all other modes, the ALL IO screen is displayed.

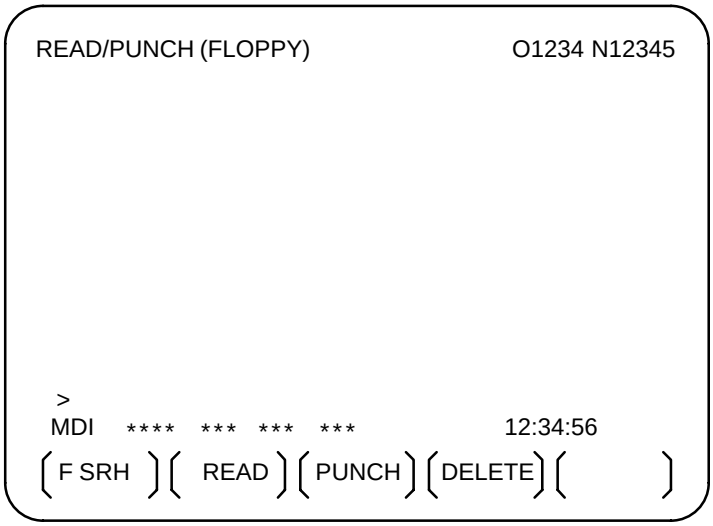

5 Press soft key **[PUNCH]**.

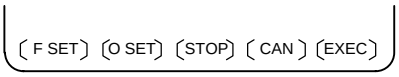

6 Enter the number of the program to be output, together with a desired output file number.

- Setting a file number: Enter the number of the desired file, then press soft key **[F SET]**.
- Setting a program number: Enter the number of the desired program, then press soft key **[O SET]**.

7 Press soft key **[EXEC]**.
The specified program is output, and the “OUTPUT” indicator blinks at the lower–right corner of the screen. Upon the completion of output, the “OUTPUT” indicator is cleared from the screen.
If no file number is specified, the program is written at the end of the currently registered files.

Deleting a file

Procedure

1 Press the rightmost soft key [▷] (continuous menu key) on the ALL IO screen, described in Section 6.7.1.

2 Press soft key **[FLOPPY]**.

3 Select EDIT mode. The floppy screen is displayed.

4 Press soft key **[(OPRT)]**. The screen and soft keys change as shown below.
The floppy screen is displayed only in EDIT mode. In all other modes, the ALL IO screen is displayed.

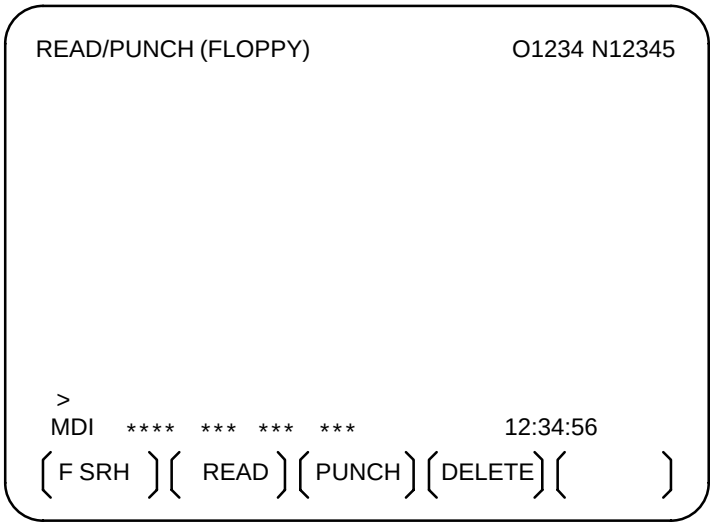

5 Press soft key **[DELETE]**.

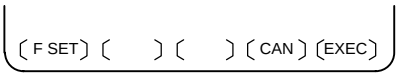

6 Enter the number of the desired file, then press soft key **[F SET]**.

7 Press soft key **[EXEC]**. The specified file is deleted. After the file has been deleted, the subsequent files are shifted up.

6.8 DATA INPUT/OUTPUT USING A MEMORY CARD

By setting the I/O channel (parameter No. 20) to 4, files on a memory card can be referenced, and different types of data such as part programs, parameters, and offset data on a memory card can be input and output in text file format.
The major functions are listed below.

- Displaying a directory of stored files

  The files stored on a memory card can be displayed on the directory screen.
- Searching for a file

  A search is made for a file on a memory card and, if found, it is displayed on the directory screen.
- Reading a file

  Text–format files can be read from a memory card.
- Writing a file

  Data such as part programs can be stored to a memory card in text file format.
- Deleting a file

  A file can be selected and deleted from a memory card.

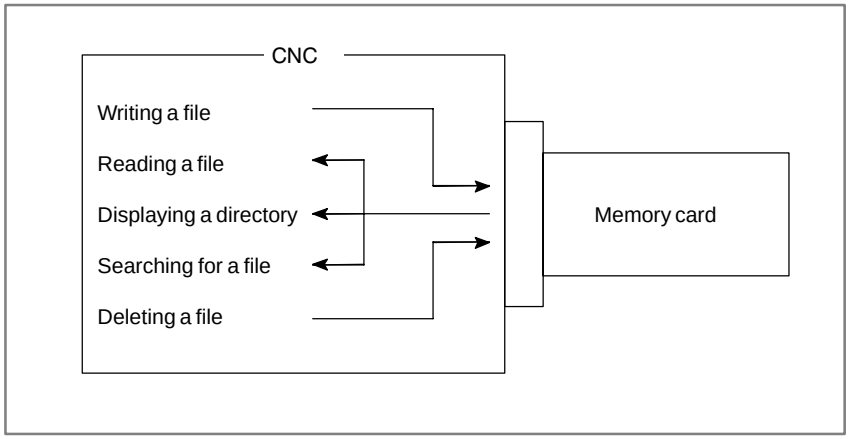

NOTE
When using the program stored on a memory card to make a subprogram call for RMT mode operation (DNC operation) or the M198 command, use the special retainer for securing a memory card to the CNC.

Displaying a directory of stored files

Procedure

1 Press the EDIT switch on the machine operator's panel.

2 Press function key [PROG] .

3 Press the rightmost soft key [▷] (continuous menu key).

4 Press soft key **[CARD]**. The screen shown below is displayed. Using page keys [↑] and [↓] , the screen can be scrolled.

```
DIRECTORY (M–CARD)                          O0034 N00045
   No.    FILE NAME          SIZE            DATE
  0001    O1000            123456          01/07/10
  0002    O1001              8458          01/07/30
  0003    O0002              3250          01/07/30
  0004    O2000             73456          01/07/31
  0005    O2001              3444          01/07/31
  0006    O3001              8483          01/08/02
  0007    O3300               406          01/08/05
  0008    O3400              2420          01/07/31
  0009    O3500              7460          01/07/31

 [ PROG ] [        ] [ DIR + ] [        ] [ (OPRT) ]
```

5 Comments relating to each file can be displayed by pressing soft key **[DIR+]**.

```
DIRECTORY (M–CARD)                          O0034 N00045
   No.    FILE NAME                        COMMENT
  0001    O1000                  (COMMENT        )
  0002    O1001                  (SUB PROGRAM    )
  0003    O0002                  (12345678       )
  0004    O2000                  (               )
  0005    O2001                  (               )
  0006    O3001                  (SKIP–K         )
  0007    O3300                  (HI–SPEED       )
  0008    O3400                  (               )
  0009    O3500                  (TEST PROGRAM)

 [ PROG ] [        ] [ DIR + ] [        ] [ (OPRT) ]
```

6 Repeatedly pressing soft key **[DIR+]** toggles the screen between the display of comments and the display of sizes and dates.
Any comment described after the O number in the file is displayed. Up to 18 characters can be displayed on the screen.

Searching for a file

Procedure

1 Press the EDIT switch on the machine operator's panel.

2 Press function key [PROG] .

3 Press the rightmost soft key [▷] (continuous menu key).

4 Press soft key **[CARD]**. The screen shown below is displayed.

```
DIRECTORY (M–CARD)                          O0034 N00045
  No.    FILE NAME          SIZE            DATE
  0001   O1000            123456           01/07/10
  0002   O1001              8458           01/07/30
  0003   O0002              3250           01/07/30
  0004   O2000             73456           01/07/31
  0005   O2001              3444           01/07/31
  0006   O3001              8483           01/08/02
  0007   O3300               406           01/08/05
  0008   O3400              2420           01/07/31
  0009   O3500              7460           01/07/31

 [ PROG ] [        ] [ DIR + ] [        ] [ (OPRT) ]
```

5 Press soft key **[(OPRT)]**.

```
[F SRH] [F READ] [N READ] [PUNCH] [DELETE]
```

6 Set the number of the desired file number with soft key **[F SRH]**. Then, start the search by pressing soft key **[EXEC]**. If found, the file is displayed at the top of the directory screen.

When a search is made for file number 19

```
DIRECTORY (M–CARD)                          O0034 N00045
  No.    FILE NAME                          COMMENT
  0019   O1000                             (MAIN PROGRAM)
  0020   O1010                             (SUBPROGRAM–1)
  0021   O1020                             (COMMENT      )
  0022   O1030                             (COMMENT      )
```

Reading a file

Procedure

1 Press the EDIT switch on the machine operator's panel.

2 Press function key [PROG] .

3 Press the rightmost soft key [▷] (continuous menu key).

4 Press soft key **[CARD]**. Then, the screen shown below is displayed.

```
DIRECTORY (M–CARD)                          O0034 N00045
   No.    FILE NAME          SIZE          DATE
  0001    O1000            123456        01/07/10
  0002    O1001              8458        01/07/30
  0003    O0002              3250        01/07/30
  0004    O2000             73456        01/07/31
  0005    O2001              3444        01/07/31
  0006    O3001              8483        01/08/02
  0007    O3300               406        01/08/05
  0008    O3400              2420        01/07/31
  0009    O3500              7460        01/07/31

 [ PROG ] [        ] [ DIR + ] [        ] [ (OPRT) ]
```

[F SRH] [F READ] [N READ] [PUNCH] [DELETE]

5 Press soft key **[(OPRT)]**.

6 To specify a file number, press soft key **[F READ]**. The screen shown below is displayed.

```
DIRECTORY (M–CARD)                          O0001 N00010
   No.    FILE NAME                        COMMENT
  0019    O1000                      (MAIN  PROGRAM)
  0020    O1010                      (SUBPROGRAM–1)
  0021    O1030                      (COMMENT        )

 READ
         FILE NAME=20                PROGRAM No.=120
 >
 EDIT  ***  ****  ***  ****                  15:40:21
 [F NAME] [ O SET ] [ STOP ] [ CAN ] [ EXEC ]
```

7 Enter file number 20 from the MDI panel, then set the file number by pressing soft key **[F SET]**. Next, enter program number 120, then set the program number by pressing soft key **[O SET]**. Then, press soft key **[EXEC]**.

- File number 20 is registered as O0120 in the CNC.
- Set a program number to register a read file with a separate O number. If no program number is set, the O number in the file name column is registered.

8 To specify a file with its file name, press soft key **[N READ]** in step 6 above. The screen shown below is displayed.

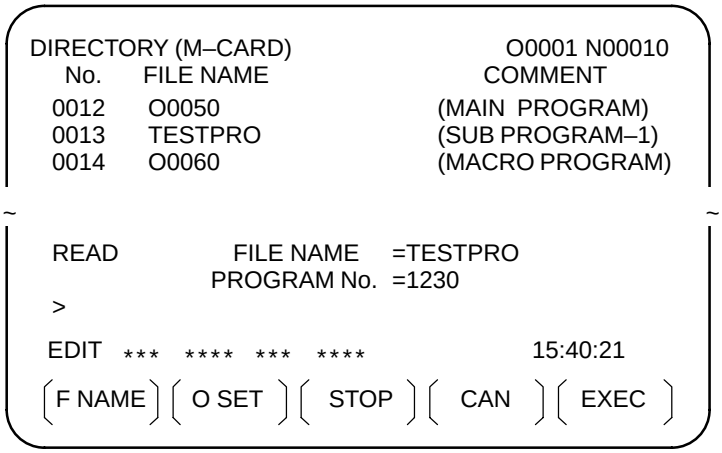

9 To register file name TESTPRO as O1230, enter file name TESTPRO from the MDI panel, then set the file name with soft key **[F NAME]**. Next, enter program number 1230, then set the program number with soft key [O SET]. Then, press soft key **[EXEC]**.

Writing a file

Procedure

1 Press the EDIT switch on the machine operator's panel.

2 Press function key [PROG] .

3 Press the rightmost soft key [▷] (continuous menu key).

4 Press soft key **[CARD]**. The screen shown below is displayed.

```
DIRECTORY (M–CARD)                          O0034 N00045
  No.    FILE NAME          SIZE          DATE
 0001    O1000            123456        01/07/10
 0002    O1001              8458        01/07/30
 0003    O0002              3250        01/07/30
 0004    O2000             73456        01/07/31
 0005    O2001              3444        01/07/31
 0006    O3001              8483        01/08/02
 0007    O3300               406        01/08/05
 0008    O3400              2420        01/07/31
 0009    O3500              7460        01/07/31

[ PROG ] [        ] [ DIR + ] [        ] [ (OPRT) ]
```

5 Press soft key **[(OPRT)]**.

6 Press soft key **[PUNCH]**.

[F SRH] [F READ] [N READ] [PUNCH] [DELETE]

7 Enter a desired O number from the MDI panel, then set the program number with soft key **[O SET]**.
When soft key **[EXEC]** is pressed after the setting shown below has been made, for example, the file is written under program number O1230.

```
PUNCH          FILE NAME  =
             PROGRAM No.  =1230
>
EDIT  ***  ****  ***  ****                15:40:21
[F NAME] [ O SET ] [ STOP ] [ CAN ] [ EXEC ]
```

8 In the same way as for O number setting, enter a desired file name from the MDI panel, then set the file name with soft key **[F SET]**.
When soft key **[EXEC]** is pressed after the setting shown below has been made, for example, the file is written under program number O1230 and file name ABCD12.

```
PUNCH          FILE NAME  =ABCD12
             PROGRAM No.  =1230
>
EDIT  ***  ****  ***  ****                15:40:21
[F NAME] [ O SET ] [ STOP ] [ CAN ] [ EXEC ]
```

Deleting a file

Procedure

1 Press the EDIT switch on the machine operator's panel.

2 Press function key [PROG] .

3 Press the rightmost soft key [▷] (continuous menu key).

4 Press soft key **[CARD]**. The screen shown below is displayed.

```
DIRECTORY (M–CARD)                          O0034 N00045
   No.    FILE NAME          SIZE          DATE
  0001    O1000            123456        01/07/10
  0002    O1001              8458        01/07/30
  0003    O0002              3250        01/07/30
  0004    O2000             73456        01/07/31
  0005    O2001              3444        01/07/31
  0006    O3001              8483        01/08/02
  0007    O3300               406        01/08/05
  0008    O3400              2420        01/07/31
  0009    O3500              7460        01/07/31
~                                                                ~
 [ PROG ] [        ] [ DIR + ] [        ] [ (OPRT) ]
```

5 Press soft key **[(OPRT)]**.

[F SRH] [F READ] [N READ] [PUNCH] [DELETE]

6 Set the number of the desired file with soft key **[DELETE]**, then press soft key **[EXEC]**. The file is deleted, and the directory screen is displayed again.

When file number 21 is deleted

```
DIRECTORY (M–CARD)                          O0034 N00045
   No.    FILE NAME                        COMMENT
  0019    O1000                          (MAIN PROGRAM)
  0020    O1010                          (SUBPROGRAM–1)
  0021    O1020                          (COMMENT      )
  0022    O1030                          (COMMENT      )
~                                                                ~
```

File name O1020 is deleted.

```
DIRECTORY (M–CARD)                          O0034 N00045
   No.    FILE NAME                        COMMENT
  0019    O1000                          (MAIN PROGRAM)
  0020    O1010                          (SUBPROGRAM–1)
  0021    O1020                          (COMMENT      )
  0022    O1030                          (COMMENT      )
~                                                                ~
```

File number 21 is assigned to the next file name.

Batch input/output with a memory card

On the ALL IO screen, different types of data including part programs, parameters, offset data, pitch error data, custom macros, and workpiece coordinate system data can be input and output using a memory card; the screen for each type of data need not be displayed for input/output.

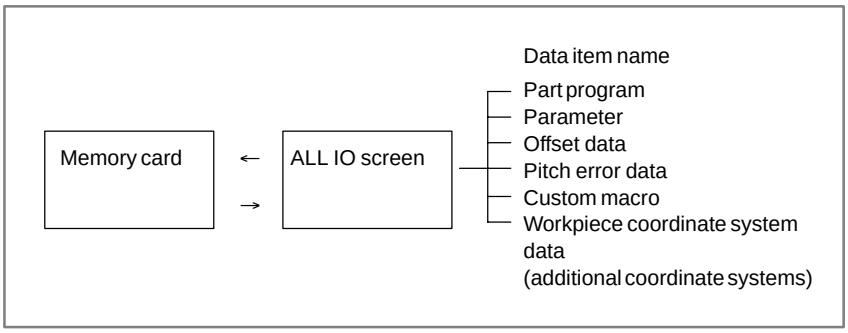

Procedure

1 Press the EDIT switch on the machine operator's panel.

2 Press function key [SYSTEM] .

3 Press the rightmost soft key [▷] (continuous menu key) several times.

4 Press soft key **[ALL IO]**. The screen shown below is displayed.

```
READ/PUNCH (PROGRAM)                    O0001 N00001
   No.    FILE NAME          SIZE          DATE
 * 0001   O0222              332010        01–04–06
   0002   O1003              334450        01–05–04
   0003   MACROVAR.DAT       653400        01–05–12
   0004   O0002              341205        01–05–13
     [PROGRAM]
   O0001  O0002  O0003  O0005  O0100  O0020
   O0006  O0004  O0110  O0200  O2200  O0441
   O0330
 >
 EDIT  ***  ****  ***  ****                10:07:37
[ PROG ][ PARAM ][OFFSET][      ][ (OPRT) ]
```

Upper part : Directory of files on the memory card
Lower part : Directory of registered programs

5 With cursor keys [↑] and [↓] , the user can choose between upper part scrolling and lower part scrolling. (An asterisk (*) displayed at the left edge indicates the part for which scrolling is possible.)

[↑] : Used for memory card file directory scrolling.

[↓] : Used for program directory scrolling.

6 With page keys [PAGE ↑] and [PAGE ↓], scroll through the file directory or program directory.

7 When this screen is displayed, the program data item is selected. The soft keys for other screens are displayed by pressing the rightmost soft key [▷] (continuous menu key).

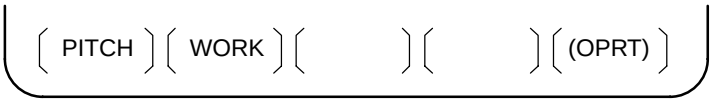

When a data item other than program is selected, the screen displays only a file directory.
A data item is indicated, in parentheses, on the title line.

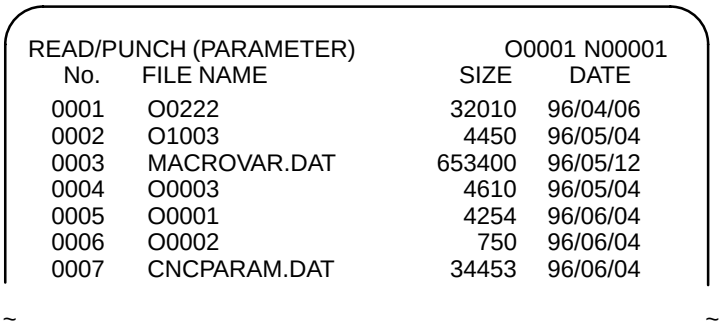

~ ~

8 Display the following soft keys with soft key **[(OPRT)]**.

The operation of each function is the same as on the directory (memory card) screen. Soft key **[O SET]**, used for program number setting, and the "PROGRAM NUMBER =" indication are not displayed for data items other than program.

[F SRH] : Finds a specified file number.
[F READ] : Reads a specified file number.
[PUNCH] : Writes a file.
[N READ] : Reads a file under a specified file name.
[DELETE] : Deletes a specified file number.

Error codes

Memory card error codes

Code	Meaning
007	The memory card is protected.
030	The memory card is not inserted into its slot.
032	The memory card's battery is exhausted.
102	The memory card does not have sufficient free space.
105	No memory card is mounted.
106	A memory card is already mounted.
110	The specified directory cannot be found.
111	There are too many files under the root directory to allow a directory to be added.
114	The specified file cannot be found.
115	The specified file is protected.
117	The file has not yet been opened.
118	The file is already open.
119	The file is locked.
121	A file end was detected.
122	The specified file name is invalid.
124	The extension of the specified file is invalid.
129	A non–corresponding function was specified.
130	The specification of a device is invalid.
131	The specification of a pathname is invalid.
133	Multiple files are open at the same time.
135	The device is not formatted.
140	The file has the read/write disabled attribute.

7 INTERFACE BETWEEN CNC AND PMC

This chapter describes the signals between the machine operator's panel, magnetics cabinet and the PMC, connection of the signals between PMC and CNC, and confirmation method of on/off state of these signals.
It also describes system configuration of PMC, parameters of PMC, ladder and how to display time chart of the signals on the screen.
It also describes a method of inputting/outputting PMC parameters to an external device.

7.1 GENERAL OF INTERFACE 448
7.2 SPECIFICATION OF PMC 449
7.3 PMC SCREEN 457
7.4 LIST OF SIGNALS BY EACH MODE 497
7.5 LIST OF INPUT/OUTPUT SIGNALS 499
7.6 LIST OF ADDRESSES 519

7.1 GENERAL OF INTERFACE

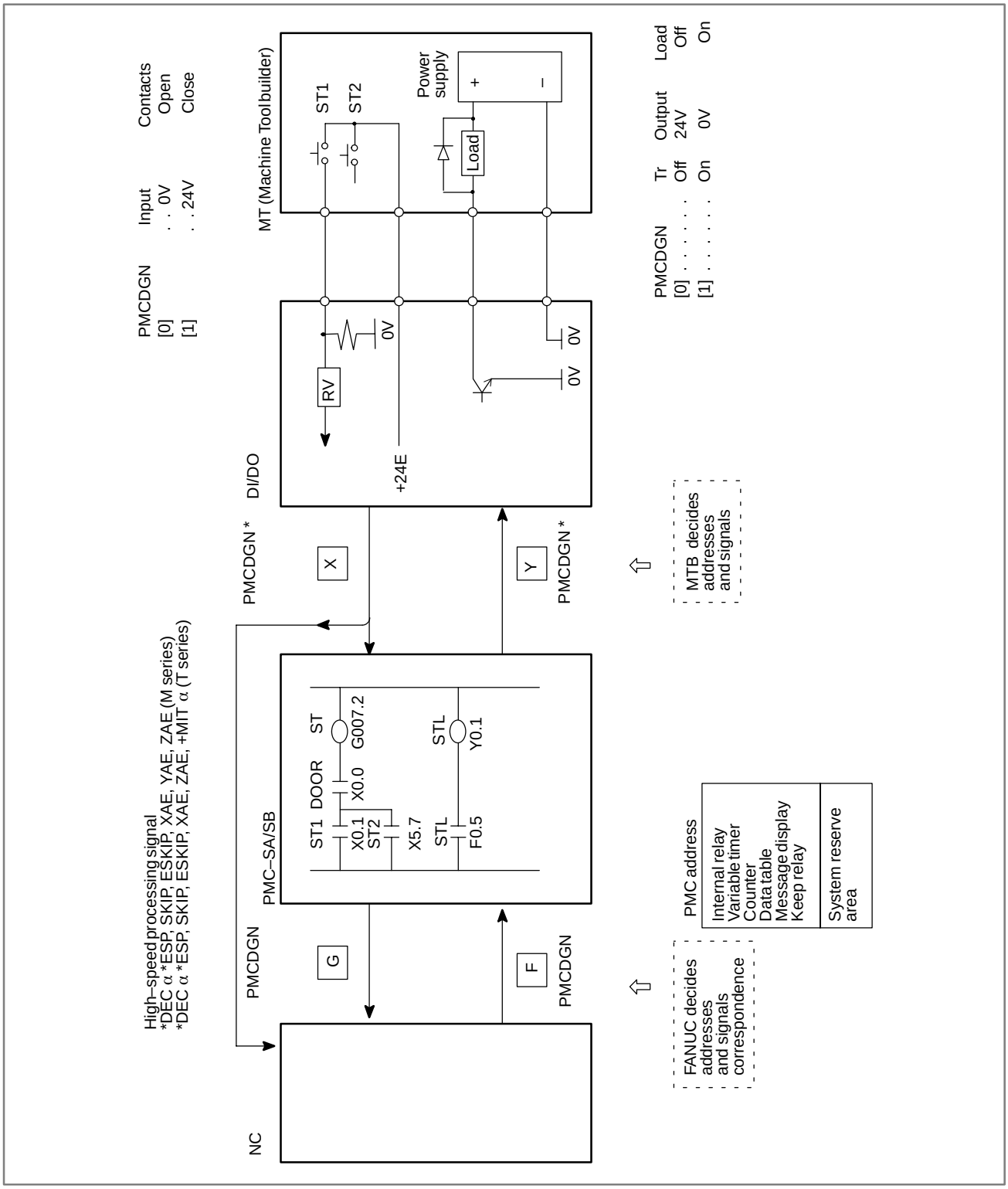

7.2 SPECIFICATION OF PMC

7.2.1 Specification

Function	Series 21*i*/210*i*/210*is*–B	Series 16*i*/160*i*/160*is*/18*i*/180*i*/180*is*/21*i*/210*i*/210*is*–B	
	PMC–SA1	PMC–SA1 (loader control)	PMC–SB7
Programmingmethod	Ladder	Ladder	Ladder
Number of ladder levels	2	2	3
1st level execution period	8ms	8ms	8ms
Basic instruction execution time	5.0μ sec/step	5.0μ sec/step	0.0033μ sec/step
Program size			
• Ladder	5,000 steps max.	12,000 steps max.	Approx. 64,000 steps max.(NOTES 1, 2)
• Symbol/comment	1 to 128 KB	1 to 128 KB	1 KB and up (NOTE 2)
• Message	0.1 to 64 KB	0.1 to 64 KB	8 KB and up (NOTE 2)
Instruction (basic) (functional)	12 48	12 48	14 69
Intemal relay (R)	1,100 bytes	1,100 bytes	8,500 bytes
Extended relay (E)	–	–	8,000 bytes
Message request (A)	200 requests (25 bytes)	200 requests (25 bytes)	2,000 requests (500 bytes, 2 bits/request)
Nonvolatile memory and so on			
• Data table (D)	1,860 bytes	1,860 bytes	10,000 bytes
• Variable timer (T) Fixed timer	40 units (80 bytes) 100 units	40 units (80 bytes) 100 units	250 units (1,000 bytes, 4 bytes/unit) 500 units (timer number specification)
• Counter (C) Fixed counter (C)	20 units (80 bytes) –	20 units (80 bytes) –	100 units (400 bytes, 4 bytes/unit) 100 units (200 bytes, 2 bytes/unit)
• Keep relay (K)	20 bytes	20 bytes	120 bytes
Subprogram (P)	–	–	2,000 programs
Label (L)	–	–	9,999 units
Input/output (I/O Link)			
• Input	1,024 points max.	1,024 points max.	2,048 points max.(NOTE 3)
• Output	1,024 points max.	1,024 points max.	2,048 points max.(NOTE 3)
Sequence program storage memory	Flash ROM 128KB	Flash ROM 128KB	Flash ROM 128 KB (16,000–step option or lower) 256 KB (24,000–step option) 384 KB (32,000/40,000–step option) 512 KB (48,000–step option) 768 KB (64,000–step option)

NOTE
1 The maximum number of steps assumes programming using basic instructions. The maximum number of steps varies according to the status of functional instruction use.
2 The total sequence program size (including all of the ladders, symbols/comments, and messages) must not exceed the capacity of the sequence program storage memory. If the size of any of the ladders, symbols/comments, or messages is greater, the maximum allowable size of the others may be limited.
3 The standard specification allows up to 1,024 input points and up to 1,024 output points. To use 2,048 input points and 2,048 output points, the I/O Link point extension option is required.

7.2.2 Address

Character	Signal type	Model	
		Series 16*i*/160*i*/160*is*/18*i*/180*i*/180*is*/21*i*/210*i*/210*is*–B	
		PMC–SA1	PMC–SB7
X	Input signal from the machine to the PMC (MT to PMC)	X0 to X127	X0 to X127 X200 to X327(NOTE 1) X1000 to X1127(NOTE 2)
Y	Output signal from the PMC to the machine (PMC to MT)	Y0 to Y127	Y0 to Y127 Y200 to Y327(NOTE 1) Y1000 to Y1127 (NOTE 2)
F	Input signal from the NC to the PMC (NC to PMC)	F0 to F255	F0 to F767(NOTE 3) F1000 to F1767(NOTE 4) F2000 to F2767(NOTE 4) F3000 to F3767(NOTE 5)
G	Output signal from the PMC to the NC (PMC to NC)	G0 to G255	G0 to G767(NOTE 3) G1000 to G1767(NOTE 4) G2000 to G2767(NOTE 4) G3000 to G3767(NOTE 5)
R	Internal relay	R0 to R999 R9000 to R9099	R0 to R7999 R9000 to R9499(NOTE 6)
E	Extended relay	–	E0 to E7999(NOTE 7)
A	Message display request signal	A0 to A24	A0 to A249
	Message display state signal	–	A9000 to A9249(NOTE 8)
C	Counter	C0 to C79	C0 to C399 C5000 to C5199(NOTE 9)
K	Keep relay	K0 to K19	K0 to K99 K900 to K919(NOTE 10)
T	Variable timer	T0 to T79	T0 to T499 T9000 to T9499(NOTE 11)
D	Data table	D0 to D1859	D0 to D9999
L	Label number	–	L1 to L9999
P	Subprogram number	–	P1 to P2000

NOTE
1 I/O of channel 2 of the I/O Link can be assigned.
This area is usable when the I/O Link point extension option is selected.
2 This area is reserved for the PMC. I/O cannot be assigned to this area. Do not use this area for sequence programs.
3 This area includes an area reserved for the PMC. The actually usable address range depends on the CNC system configuration.
4 Use this area when the CNC is a multipath system. This area includes an area reserved for the PMC. The actually usable address range depends on the CNC system configuration.
5 This area is reserved for the PMC. Do not use this area for sequence programs.
6 This area is a special relay area managed by the PMC system program. When using this area, follow the description of each signal.
7 In an ordinary system, this area can be used as with the internal relay (R) area. The extended relay (E) area is volatile, but a signal is input to or output from a memory card as a PMC parameter. When a PMC parameter is read, the E area is initialized to the state present at the time of PMC parameter output.
8 Message display state signals corresponding to message display request signals on a one–to–one basis. This area cannot be written to.
9 This area is used for the fixed counter instruction (CTRB instruction), which specifies a preset value as a constant.
10 This area is a special relay area for PMC management software. When using this area, follow the description of each address.
11 This area is reserved for the PMC. Do not use this area for sequence programs.

7.2.3 System Reserve Area of Internal Relay

(1) R9000 (Operation output register for the ADD, SUB, MULB, DIVB, and COMPB functional instructions)

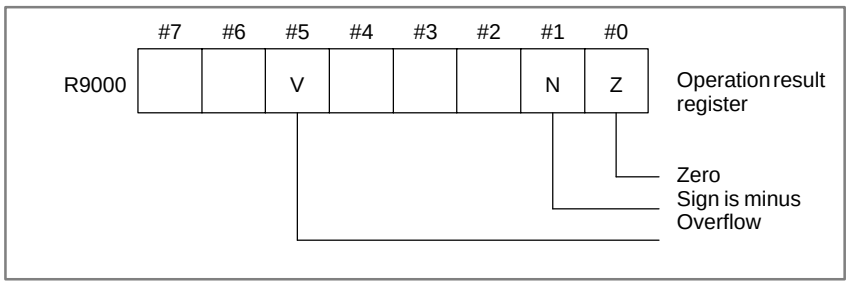

(2) R9000 (Error output for the EXIN, WINDR, WINDW, MMCWR, and MMCWW functional instructions)

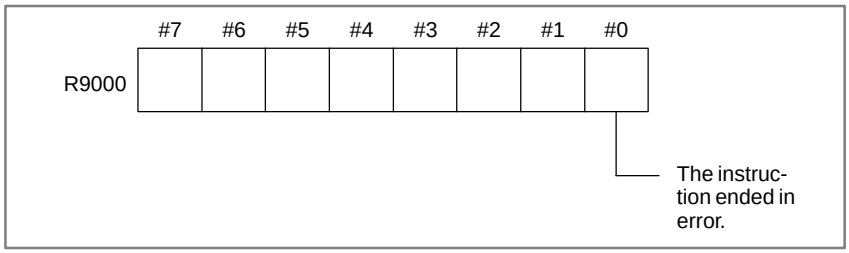

(3) R9002 to R9005 (Operation output registers for the DIVB functional instruction)

The data remaining after the DIVB functional instruction is executed in output.

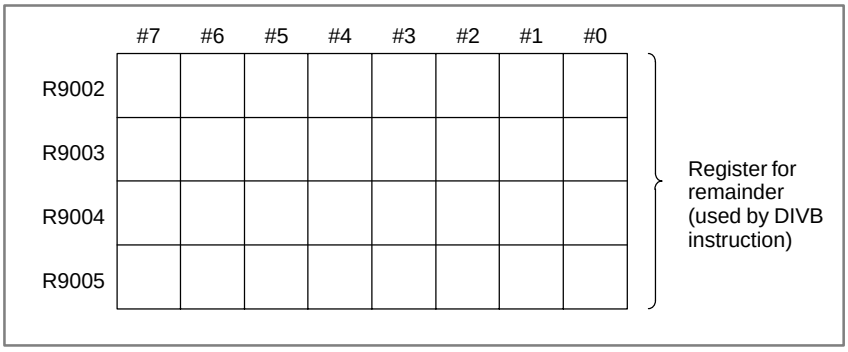

(4) R9091 (System timer)

4 signals can be used as system timer.

The specifications of every signal are as following.

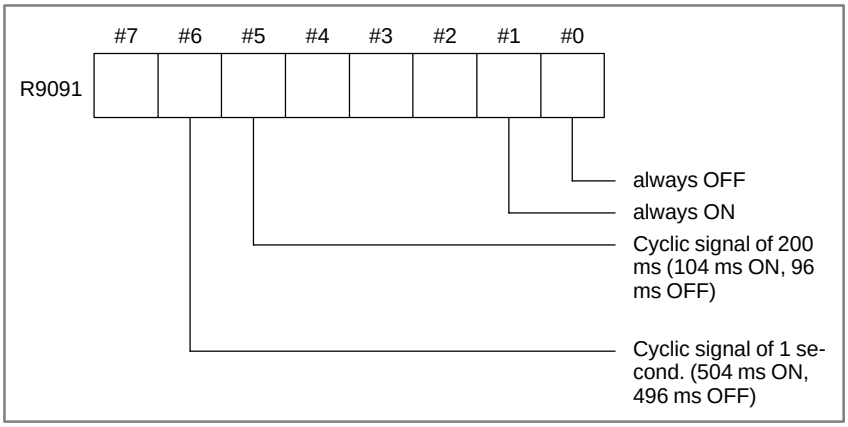

CAUTION

Each signal is initially off. R9091.0 and R9091.1 are set cyclically at the beginning of the first ladder level.

Each signal (ON–OFF signal) has an accuracy of ±8 ms.

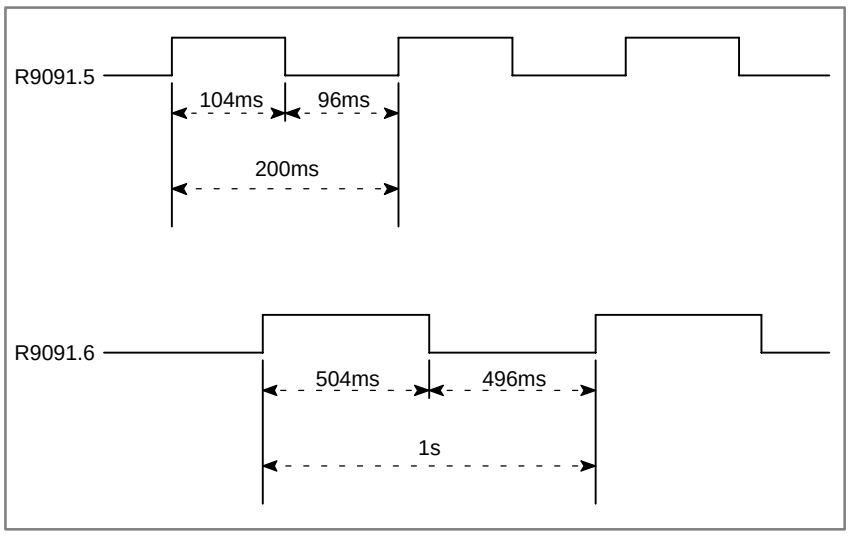

(5) Ladder execution start signal, ladder stop signal, ladder execution state signal (PMC–SB7)

1 Ladder execution start signal and latter stop signal

With the ladder execution start signal or the ladder stop signal, the start or stop of a ladder program can be known in the ladder program.

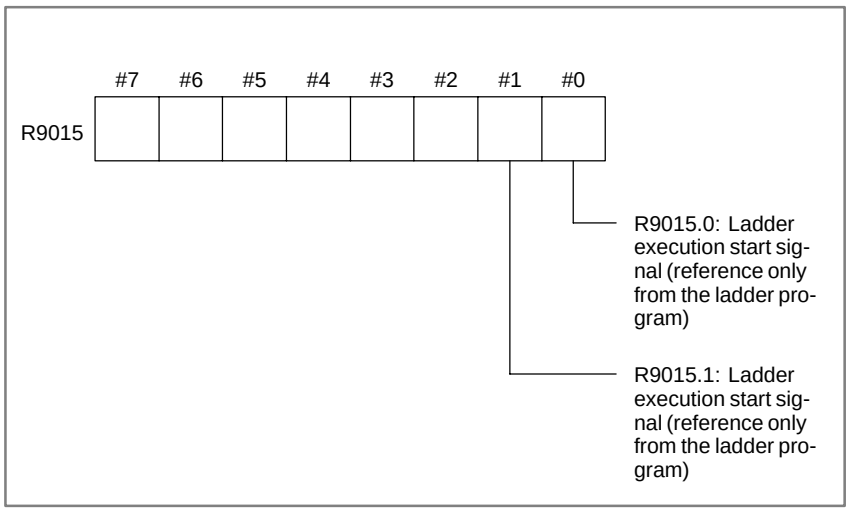

2 Ladder execution state signal

The state of ladder program execution or PMCC language program execution can be known by referencing the ladder execution state signal from an external system or program such as the network board, C executor program, FOCAS1 Ethernet, and HSSB library.

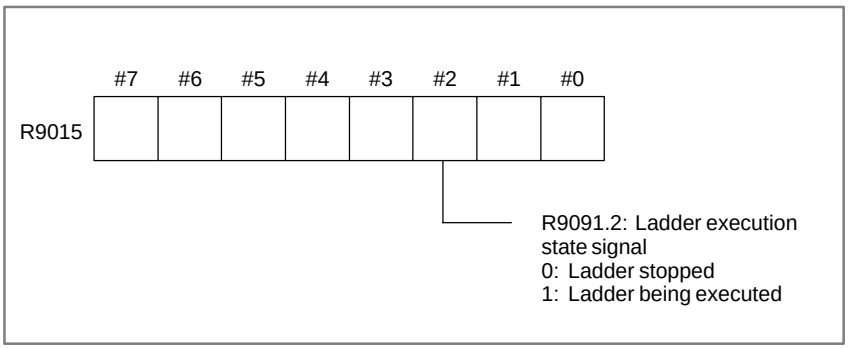

7.2.4 Execution Period of PMC

For PMC–SA1

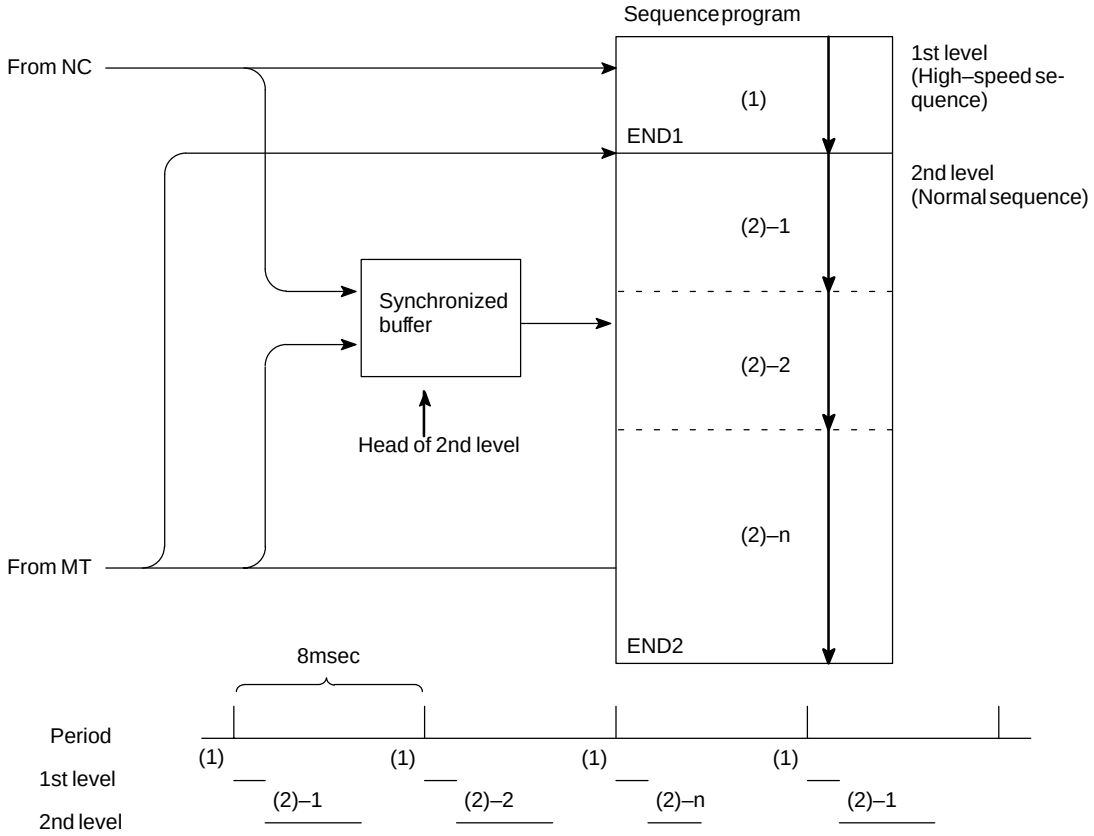

For PMC–SB7

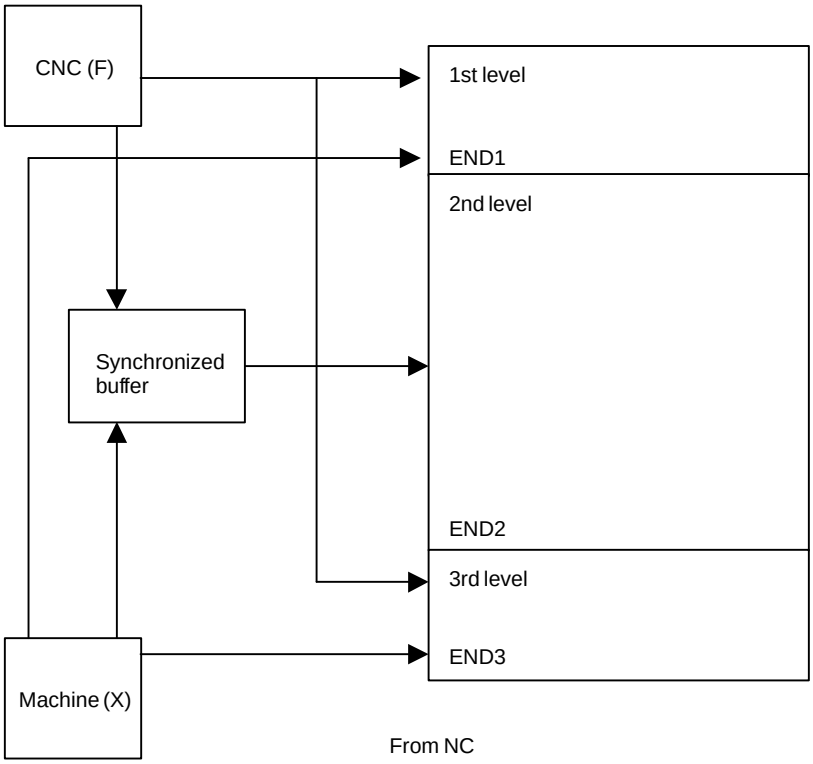

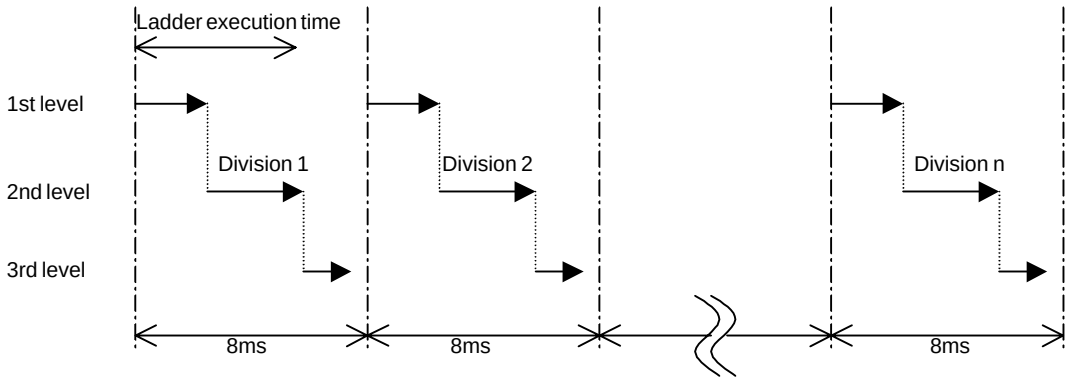

The ratio of the 1st level execution time to the 2nd level execution time is set in a system parameter for ladder execution time.

- For a ladder that uses the 1st level and the 2nd level only, set the upper limit (150).

- For a ladder that uses the 3rd level, the setting of the upper limit (150) may not ensure full 3rd level operation. In such a case, set this parameter so that the processing times of the 1st level and 2nd level are reduced.

The 1st ladder level or the 2nd ladder level processing time is determined by the following expression:

$$\text{The 1st ladder level or 2nd ladder level processing time} = 5\text{msec} \times \frac{\text{Ladder execution time}}{100}$$

The 3rd ladder level processing time is determined by the following expression:

The 3rd ladder level processing time = 7.5 msec – (1st ladder level and 2nd ladder level processing times)

7.3 PMC SCREEN

7.3.1 PMC Menu Selection Procedure Using Soft Keys

PMC–SA1 screen menu selection procedure

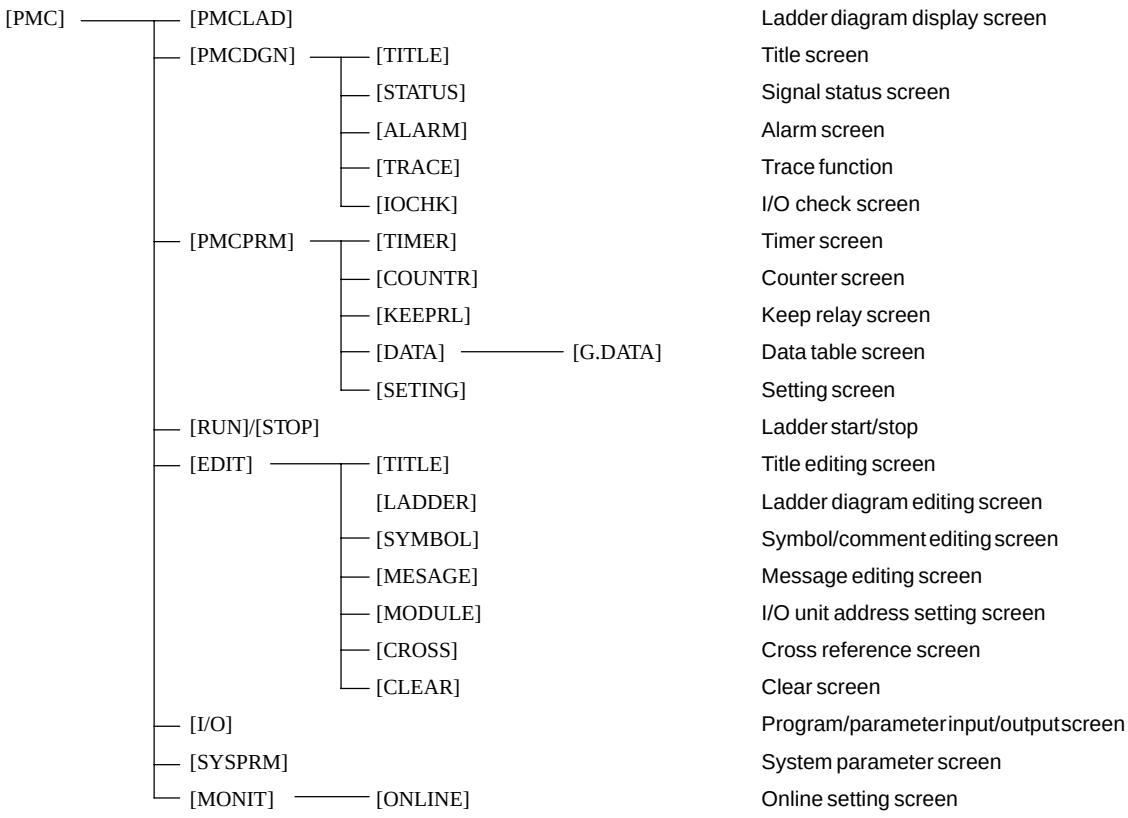

PMC–SB7 screen menu selection procedure

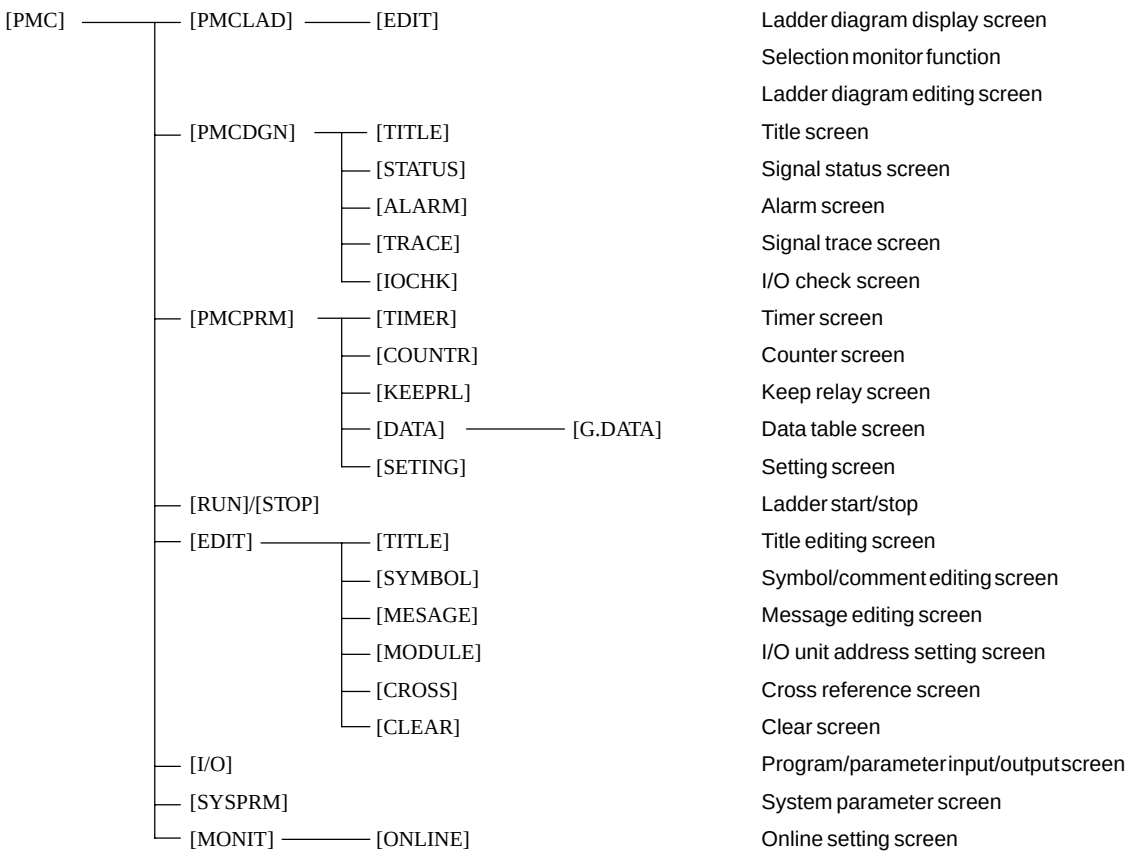

7.3.2 PMCLAD Screen (PMC–SA1)

Press soft key **[PMCLAD]**, and a sequence program is displayed dynamically and operation monitoring can be confirmed :

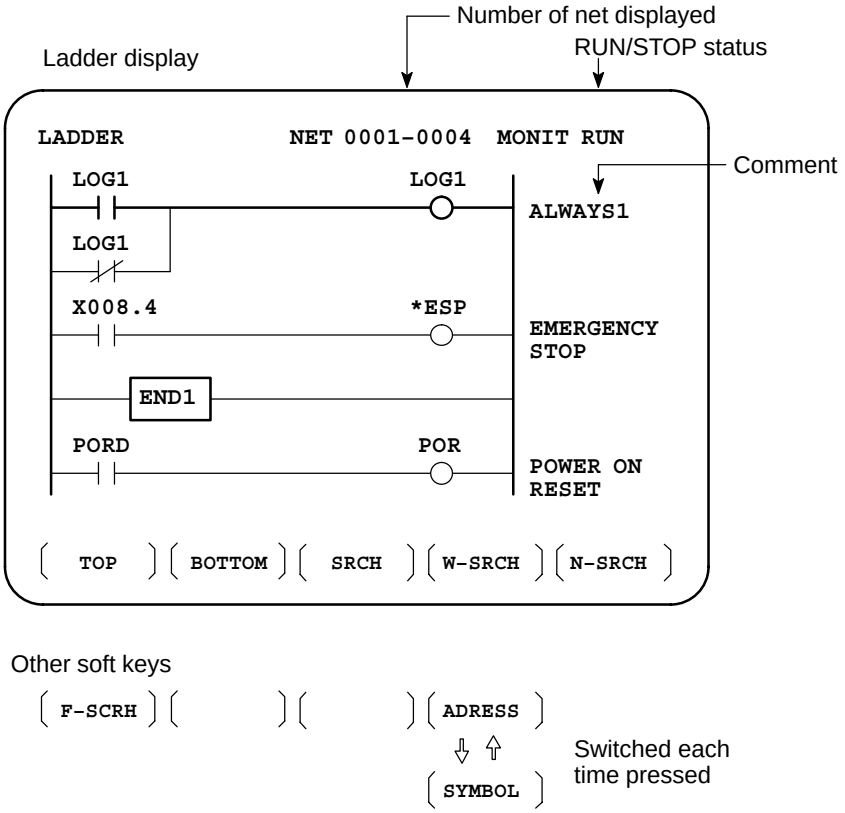

- **Contents displayed**

1. Green (Low brightness) display Contacts :open Relay :off
2. White (High brightness) display Contacts : closed Relay : on

- **Search method**

1. Use the cursor keys ↓ ↑ or the page keys PAGE ↓ PAGE ↑ to change display positions.
2. **[TOP]**:Searches top of ladder.
3. **[BOTTOM]**:Search bottom of ladder.
4. Address.bit,**[SRCH]** or Signal name, **[SRCH]**
5. Address.bit,**[W–SRCH]** or Signal name ,**[W–SRCH]**
6. Net no.**[N–SRCH]**:Ladder is displayed from the specified net.
7. Functional instruction no. **[F–SRCH]** or Functional instruction name**[F–SRCH]**
8. **[ADRESS]**:Signal is displayed by address and bit no.
9. **[SYMBOL]**:Signal is displayed by signal name (symbol).
   (If symbol is not registered at program preparation time, the address of the signal is displayed).

[Remarks]

- The search function searches a signal in the forward direction and displays the ladder with the searched signal at its head. Because there may exist plural contacts, repeat the search operation to find plural locations, repeat the search operation to find plural locations with the specified signal.
- If a specified signal is not found up to the end of the program (ladder), execution returns to the head of a program and search continues.

● Dump display on ladder diagram

Ladder diagram and signal status dump can displayed together.
The dump is displayed over 2 lines at the last line of ladder diagram by pressing the **[DUMP]** soft key.

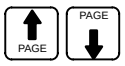

keys or **[SEARCH]** soft key is used for changing of PMC address.

The [DUMP] soft key has the follwing functions.

(1) [BYTE]: Byte type display (1 BYTE)
"G0000 00 14 00 00 01 00 00 00 00 00 00 00 00 00 00 00"
"G0016 00 00 00 00 00 00 00 00 00 00 00 00 00 00 00 00"

(2) [WORD]: Word type display (2 BYTE)
"G0000 1400 0000 0001 0000 0000 0000 0000 0000"
"G0016 0000 0000 0000 0000 0000 0000 0000 0000"

(3) [D.WORD]: Long word type display (4 BYTE)
"G0000 00001400 00000001 00000000 00000000"
"G0016 00000000 00000000 00000000 00000000"

● Parameter display on ladder diagram

The value of parameter of a functional instruction is displayed in the functional instruction of a ladder diagram.

The function of the soft key is as follows:

(1) [DPARA] : The value of parameter is displayed in functional instruction.

(2) [NDPARA] : The value of parameter is not displayed in functional instruction.

● Stop of ladder diagram display by trigger of signal

The ladder display can be stopped by manual operation or trigger of signal.
The former ladder diagram display renews signal status every moment. But by using this function, all the ladder diagram at the specified moment can be checked.
The stop conditions as a trigger are specified by rising or falling edge detection of the designated signal.

- **Display of setting trigger**

The setting address, condition and counter are displayed at the title line.

“MODE:ON : X0000. 0 : 0 : 0001 ”

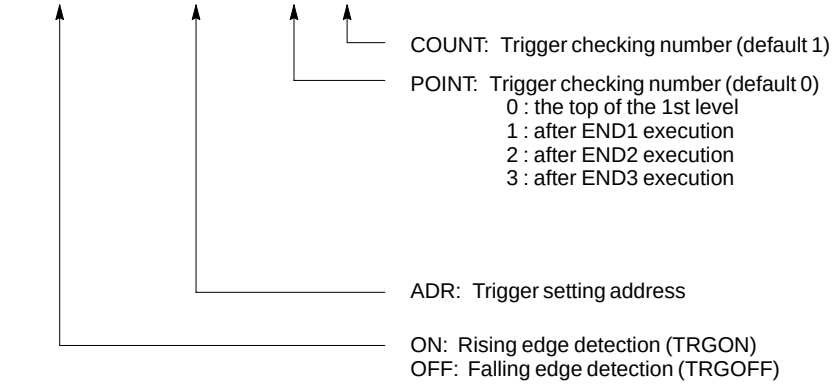

* Setting form adr ;p1 ;p2+[TRGON/TRGOFF]soft key

NOTE
“;”=“EOB”

Adr (trigger address) ;p1 (trigger point) ;p2 (trigger checking number (1 to 65535))

* Because parameters are stored in the nonvolatile memory, they are not lost even if the power is turned off.
When bit 2 of keep relay K18 is set to 1 after parameters for sampling are specified, the trigger function automatically starts when the power is turned on.
For this operation, depress **[TRIGER]** soft key to bring the following menu.

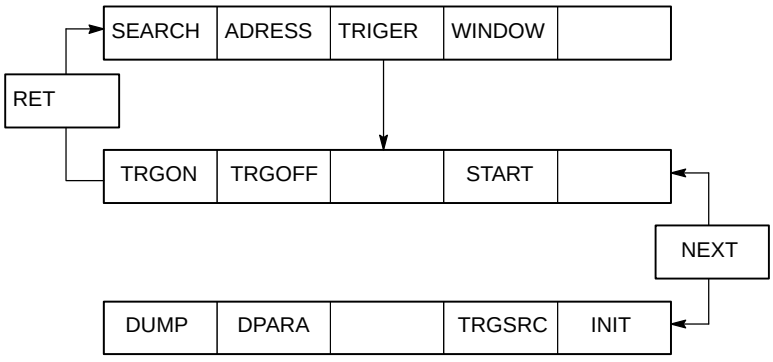

The function of the **[TRIGER]** soft key is explained below:

(1) [TRGON] : The trigger function is stopped when a specified address signal goes high (is turned ON).

(2) [TRGOFF] : The trigger function is stopped when a specified address signal goes low (is turned OFF).

(3) [START] : Pressing this key switches between trigger function execution and trigger function termination. While the trigger function is being executed, the “TRG” indication blinks.

(4) [TRGSRC]: An instruction at which the trigger function has been stopped by a specified address signal is searched for and indicated by blinking.

(5) [INIT] : The trigger setting is initialized.

- **Divided display of ladder diagram**

This function is used for displaying the divided screen. It can display max. six division.
For this operation, depress **[WINDOW]** soft key to bring the following menu.

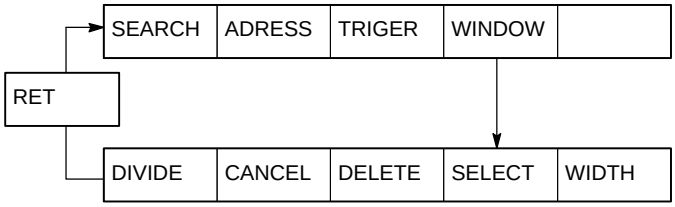

The function of the soft key **[WINDOW]** is as follows:

(1) [DIVIDE] : The screen will be divided.
The dividing display of ladder diagram can be displayed for the designated NET number.
(NET number+**[DIVIDE]**)

(2) [CANCEL] : The dividing display of ladder diagram display ends. (The screen returns to normal display.)

(3) [DELETE] : The screen division subject to operation is ended.

(4) [SELECT] : Change the screen subject to division operation.
The screen in operation is displayed by “purple” title line, another screen is displayed by “blue” title line.
In monochrome, the screen is displayed by changing brightness.

(5) [WIDTH] : Change the width of division by using **[EXPAND]** or **[SHRINK]** soft key.

(6) [EXPAND] : The divided screen is expanded.

(7) [SHRINK] : The divided screen is shrank.

- **ON–LINE EDIT**

When bit 1 in the keep relay K17 is 1, this function is available and **[ONLEDT]** soft key is displayed.

When the ladder program is executing, a part of the ladder program can be changed.
- Change the type of contact (A contact, B contact)
- Change address of contact and coil.
- Change address parameter of functional instruction.

This function don’t change the size.
(Cannot be Addition, deletion and chanegable data size)
When bit 3 in the keep relay K18 is 1, this program is automatically transferred to backup RAM after on–line edit.
When bit 3 in the keep relay K18 is 0, transfer to backup RAM with COPY function of I/O screen. If power is off without this operation, edited data is lost.

7.3.3 Ladder Diagram Display/Editing (PMC–SB7)

Screen transitions are made as shown below.

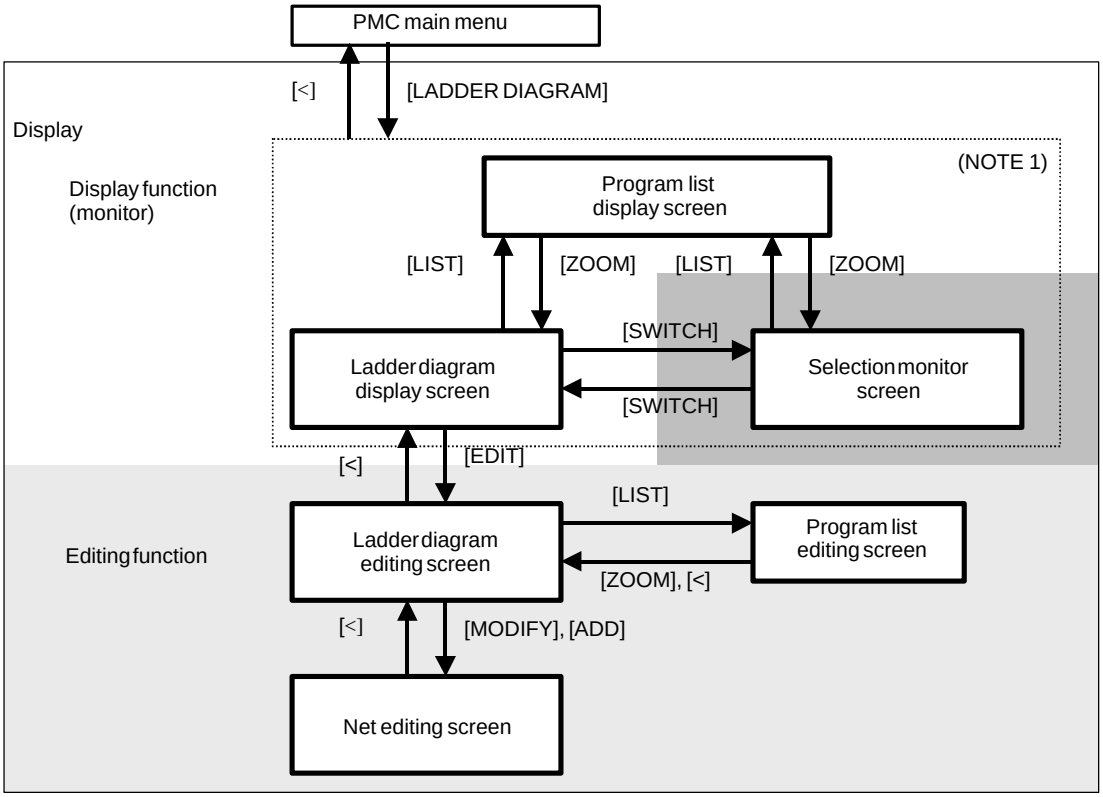

NOTE
1. When you press the [LADDER DIAGRAM] soft key, the screen previously displayed among the ladder diagram display screen, selection monitor screen, and program list display screen is displayed. However, when you press the [LADDER DIAGRAM] soft key for the first time after turning on the power, the program list display screen is displayed. If a ladder program is replaced by using the input/output function, the program list display screen is first displayed. For details, see the description of the program list display screen.
2. The [EDIT] soft key on the ladder diagram display screen is displayed only when the programmer function is enabled. (To enable the programmer function, specify “YES” for the setting item “Enable Programmer Function” on the PMC parameter setting screen, or set K900.1 to 1.) Alternatively, specify “YES” for “Enable Editing” or set K901.6 to 1. While the online monitor function is enabled, the screen display cannot be switched to the ladder diagram editing screen. (To disable the online monitor function, set “Not Used” for “RS–232C” and “High–speed Interface” on the online monitor setting screen.

7.3.3.1 Ladder diagram display screen

- Display subprogram switching [LIST]
- Search for addresses [SEARCH]
- Function instruction data table display [TABLE]

- Transition to the selection monitor screen [SWITCH]
- Forced input/output function (FORCING mode)
  "Number" + ENTER key

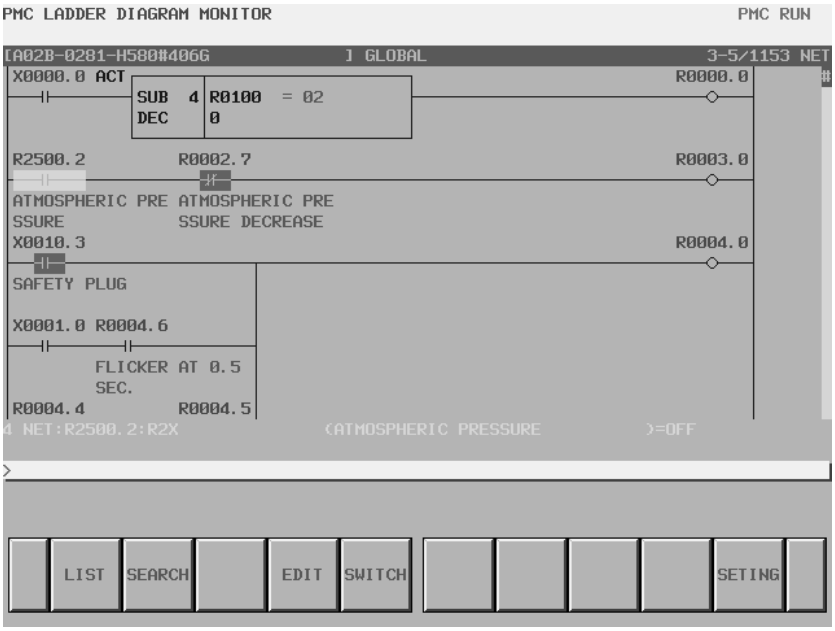

Screen manipulation

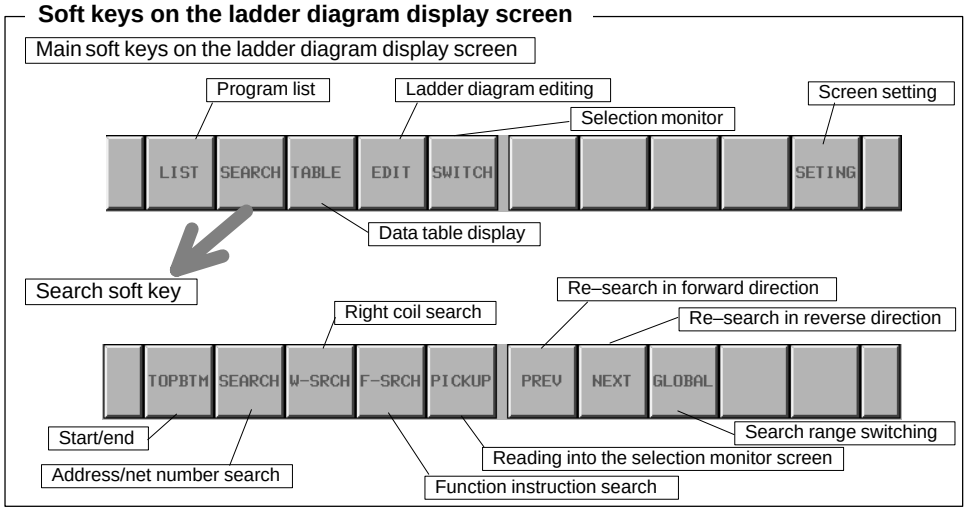

(a) Manipulation using soft keys

1 [LIST] Calling the program list display screen
This soft key calls the program list display screen. The program list display screen enables you to select a subprogram to be displayed on the ladder diagram display screen.

2 [SEARCH] Search/jump menu
This soft key displays the soft keys for search. To return to the main soft key display, use the return key [<].
The soft keys for search are described below.

- [TOPBTM] Start/end
  This soft key makes a jump to the start of the ladder program. If the start of the ladder program is already displayed, a jump is made to the end of the ladder program.

- [SEARCH] Address/net number search
  This soft key searches for the address or net number corresponding to an entered character string, and displays the address on the screen. Both a bit address and a byte address can be searched for.
  When a number is entered, it is assumed to be a net number, and a jump is made.
  When a character string other than numbers is entered, a check is made to see if the character string is defined as a symbol. If the character string is defined as a symbol, the address represented by the symbol is searched for.
  If the character string is not defined as a symbol, the character string is interpreted as a character string representing an address. If interpretation is performed normally, the address is searched for.
  If an address is searched for without displaying the cursor, the screen display is moved so that the net including a found relay is placed at the top of the screen. If an address is searched for with the cursor displayed, the cursor directly moves to the found relay.

- [W–SRCH] Right coil search
  This soft key searches for the bit address represented by an entered character string. A search is made only when the address is used for a right coil. Even if the bit address is used for an ordinary contact, the address is not searched for.

- [F–SRCH] Function instruction search
  This soft key searches for a function instruction when a function instruction number or function instruction name is entered.

- [PICKUP] Reading of a ladder net into the selection monitor screen
  This soft key reads a ladder net to be monitored into the selection monitor screen.

- [PREV] Previous candidate
  This soft key repeats the previously successful search operation towards the start.

- [NEXT] Next candidate
  This soft key repeats the previously successful search operation towards the end.

- [GLOBAL]/[LOCAL] Range switching
  This soft key switches the search target between the whole ladder program (whole) and subprogram currently displayed (local). This soft key is displayed only when a subprogram is displayed. The current search range is displayed at the right end of the information display line at the top of the screen.

3 [TABLE] Calling the function instruction data table display screen
This soft key displays the data table of a function instruction with a data table such as the COD instruction (SUB7) or CODB instruction (SUB27). This soft key is displayed only when the cursor is placed on a function instruction with a data table.

4 [EDIT] Calling the ladder diagram editing screen
This soft key switches the screen display to the ladder diagram editing screen. This soft key is displayed only when the programmer function is enabled. While the online monitor function is enabled, the screen display can be switched to the ladder diagram editing screen. If a password is set for the ladder program, the input of the password is requested. Enter the password required for editing.

5 [SWITCH] Calling the selection monitor screen
This soft key displays the selection monitor screen.

6 [SETING] Screen setting
This soft key calls the setting screen for the ladder diagram display screen. Various settings for ladder diagram display can be modified. To return to the ladder diagram display screen, use the return key [<]. For details of the setting screen, see "Screen setting" in the description of the ladder diagram display screen.

7.3.3.2 Program list display screen

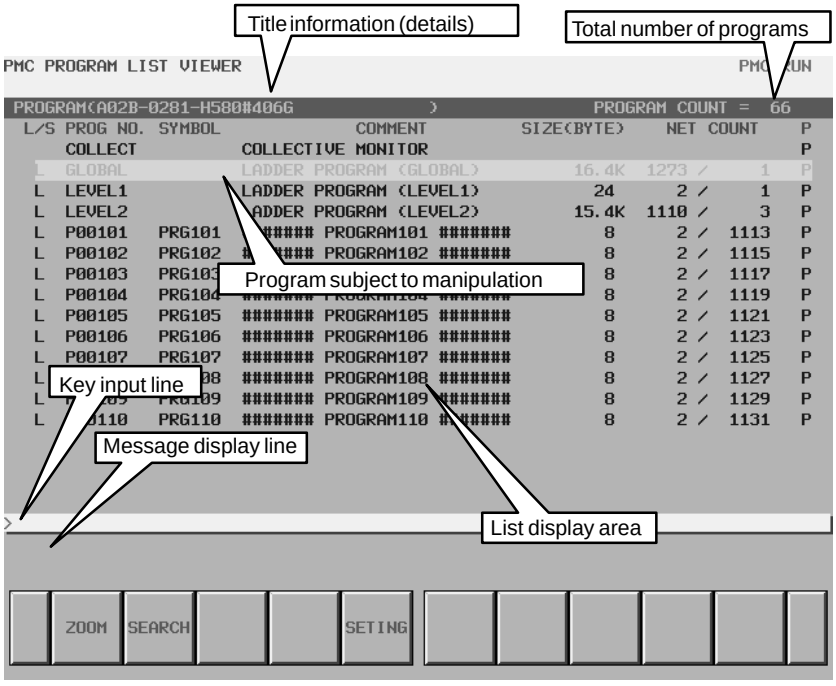

Detail display screen

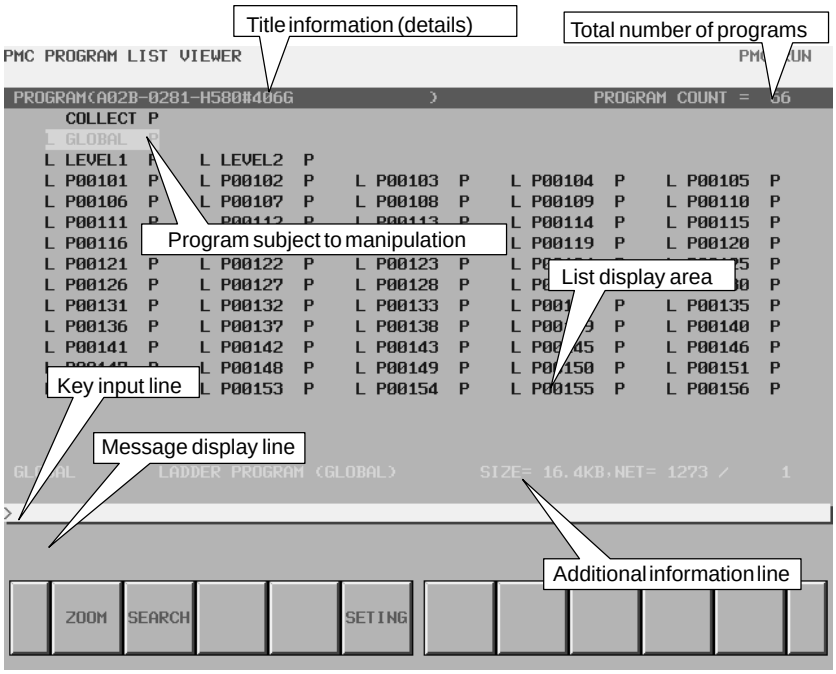

Simplified display screen

A choice between the detail display screen and simplified display screen can be made on the setting screen.

Screen manipulation

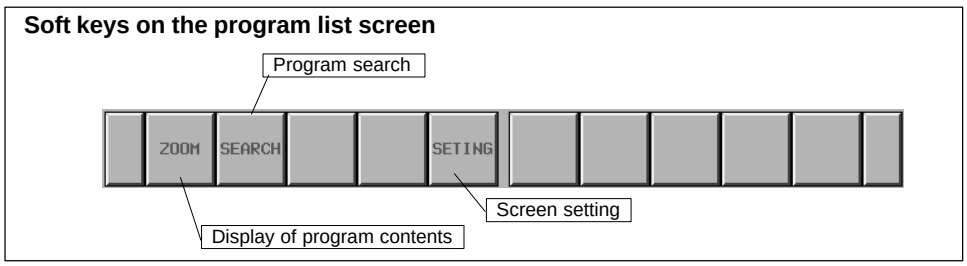

(a) Manipulation using soft keys

1 [ZOOM] Display of program contents
This soft key switches the screen display to the ladder diagram display screen. When you press the [ZOOM] soft key without entering any character string, the program on which the cursor is placed is displayed on the ladder diagram display screen. When you press the [ZOOM] soft key after entering a program name (reference: (c)<1>) or symbol name, the program corresponding to the entered character string is searched for and displayed on the ladder diagram display screen.
If the target program is protected so that it cannot be referenced, the password needs to be released.

2 [SEARCH] Program search
This soft key searches for a program. When you press the [SEARCH] soft key after entering a program name (reference: (c)<1>) or symbol name, the program corresponding to the entered character string is searched for, and the cursor moves to the program.

3 [SETING] Screen setting
This soft key calls the setting screen for the program list display screen. Various settings for program list display can be modified. To return to the program list display screen, use the return key [<]. For details of the setting screen, see “Screen setting” in the description of the program list display screen.

7.3.3.3 Selection monitor function (PMC–SB7)

On the selection monitor screen, only a ladder net including a coil to be monitored can be specified for ladder net monitoring.

Calling the screen

The selection monitor screen can be called as described below.

1 Calling the screen from the program list display screen
On the program list screen, move the cursor to the “COLLECT” program position, then press the [ZOOM] soft key.

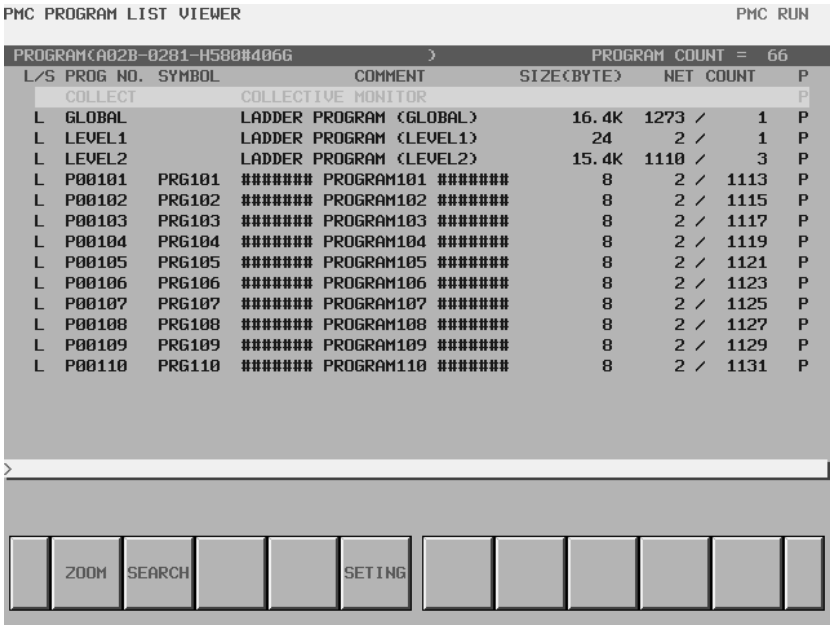

Program list display screen

2 Calling the screen from the ladder diagram display screen
On the ladder diagram display screen, press the [SWITCH] soft key.

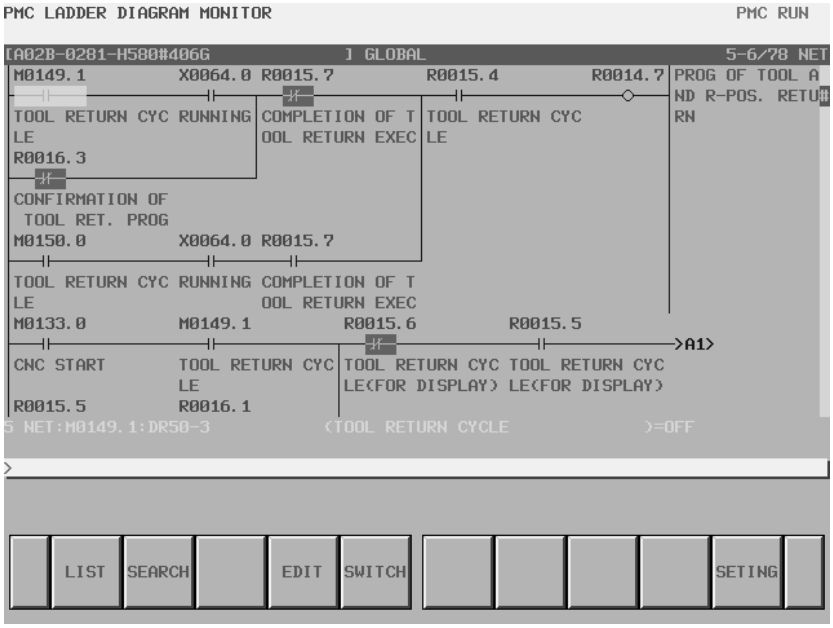

Ladder diagram display screen

Selection monitor screen

The selection monitor screen is shown below. Initially, no ladder diagram is displayed. Ladder nets selected by coil search and read operation are added step by step. Finally, up to 128 nets can be added on the selection monitor screen. If more than 128 nets are added, the latest 128 nets added are displayed.

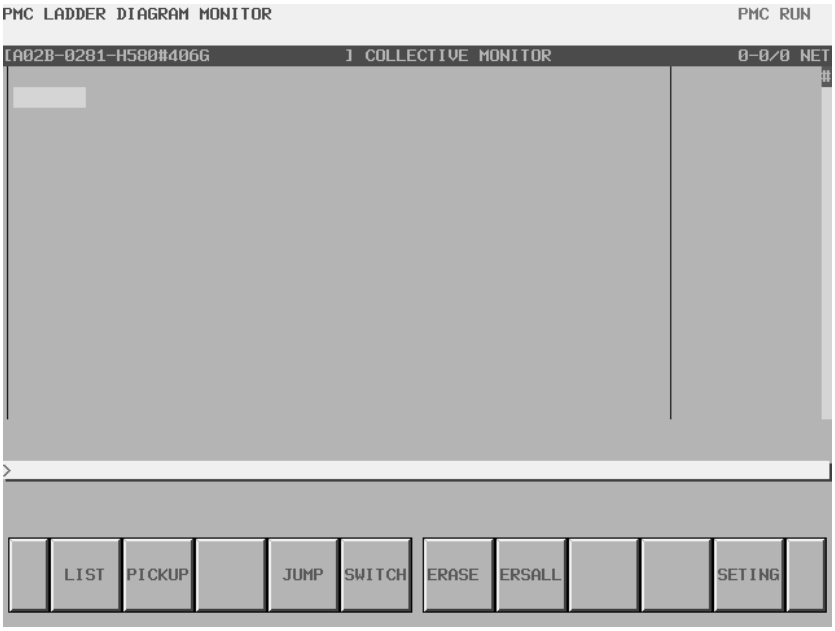

Selection monitor screen (initial screen)

Screen manipulation

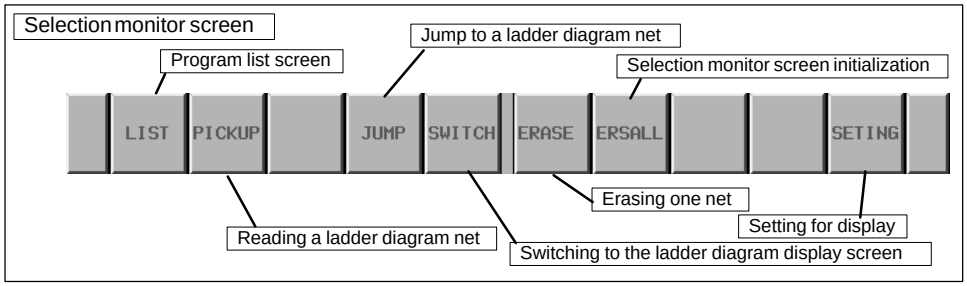

Soft keys on the selection monitor screen

(a) Manipulation using soft keys

1 [LIST] Calling the program list display screen
This soft key calls the program list display screen. The program list display screen enables you to select a subprogram to be displayed on the ladder diagram display screen.

2 [PICKUP] Reading a ladder net
With this soft key, a ladder net including a coil to be monitored can be read into the selection monitor screen.

3 [JUMP] Jump to a ladder net
This soft key searches the ladder diagram display screen for the ladder net where the cursor is placed on the selection monitor screen, and makes a jump to the net.

4 [SWITCH] Switching to the ladder diagram display screen
This soft key switches the screen display to the ladder diagram display screen.

5 [ERASE] Erasure of ladder diagram net display (one net)
This soft key erases the display of one ladder net read into the selection monitor screen.

6 [ERSALL] Erasure of ladder diagram net display (all nets)
This soft key erases the display of all ladder nets read into the selection monitor screen.

7 [SETING] Screen setting
This soft key calls the setting screen for the selection monitor screen. Various settings for ladder diagram display can be modified. To return to the selection monitor screen, use the return key [<].

- **Specifying a ladder diagram to be monitored**

The methods described below are available to read a ladder net to be monitored on the selection monitor screen.

1 Specifying a ladder net on the selection monitor screen
- Specification of an address
  Key in the address used for a coil to read the net.
- Specification of a ladder net on the selection monitor screen
  Specify a relay on an already read ladder net with the cursor, and read the net where the relay address is used for a coil.

2 Specifying a ladder net on the ladder diagram display screen
Specify a net on the ladder diagram display screen to read the net into the selection monitor screen.

- **Reading a ladder net on the selection monitor screen**

A ladder net can be read from the selection monitor screen. Use the procedure below to read a ladder net.

(a) Specification of an address

1 Enter an address to be monitored. (Example: R14.7)
2 Press the [PICKUP] soft key.
3 The net where the address specified in 1 above is used for a coil is read into the start of the screen.

(b) Specification of an address from the ladder net on the screen

1 Move the cursor to the relay, in a ladder net, which uses an address to be monitored.
2 Press the [PICKUP] soft key.
3 The net where the address specified in 1 above is used for a coil is read into the start of the screen, and the cursor moves to the coil position.

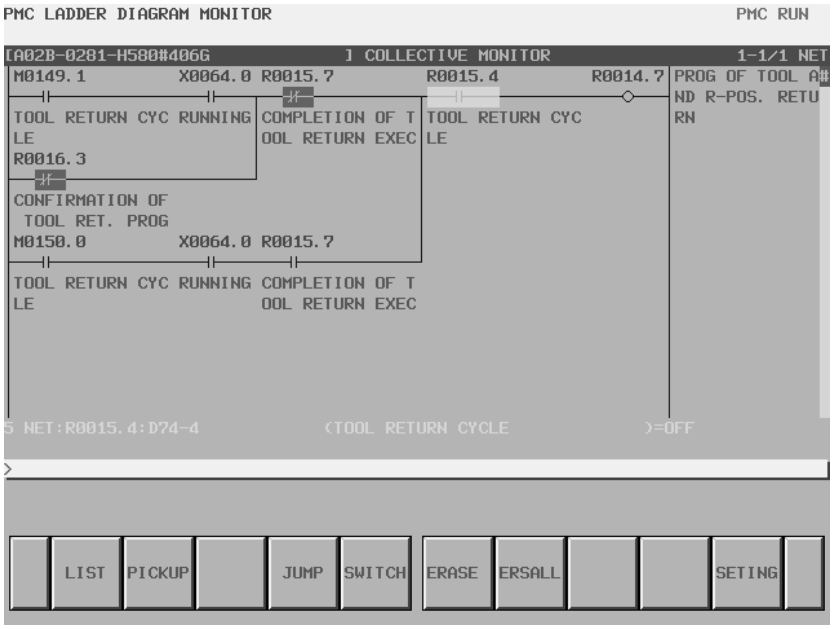

Selection monitor screen

- **Reading a ladder net from the ladder diagram display screen**

A ladder net can be read from the ladder diagram display screen. Use the procedure below to read a ladder net.

1 On the ladder diagram display screen, press the [SEARCH] soft key to display the soft keys for search.
2 Move the cursor to a ladder net to be read.
3 Press the [PICKUP] soft key to read the net specified in 2 above to the start of the selection monitor screen.
4 The ladder net read into the selection monitor screen is marked with ● at the left end of the net.

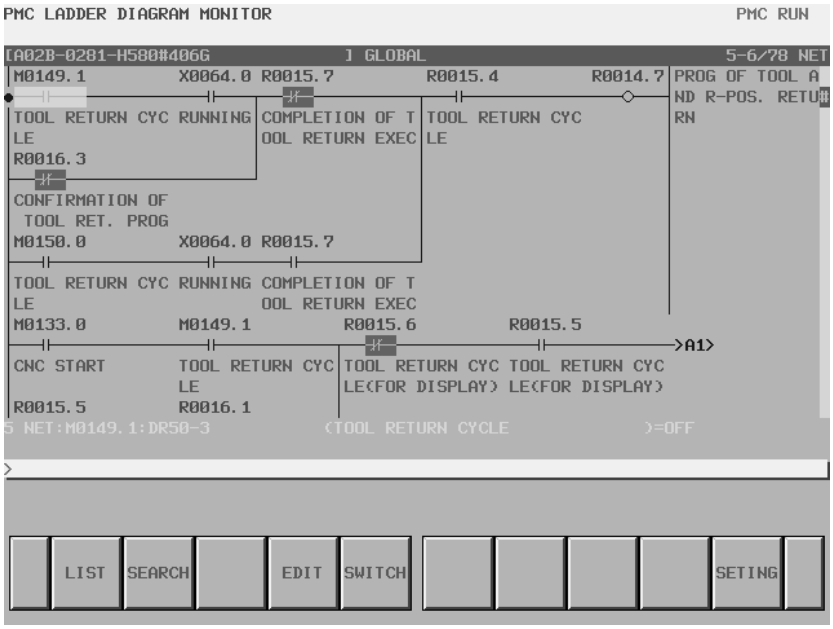

Ladder diagram display screen (search soft keys)

7.3.3.4 Ladder diagram editing screen

On the ladder diagram editing screen, a ladder program can be edited, and its operation can be modified. To display the ladder diagram editing screen, press the [EDIT] soft key on the ladder diagram display screen. On the ladder diagram editing screen, the following editing operations can be performed on a ladder program:

- Net–by–net deletion [DELETE]
- Net–by–net movement [CUT] and [PASTE]
- Net–by–net copy [COPY] and [PASTE]
- Changing the address of a contact or coil
  “Bit address” + INPUT key
- Modifying a function instruction parameter
  “Numeric value/byte address” + INPUT key
- Adding a new net [CREATE]
- Modifying a net figure [MODIFY]
- Reflecting the results of editing [UPDATE]
- Restoring the pre–editing state [RESTOR]

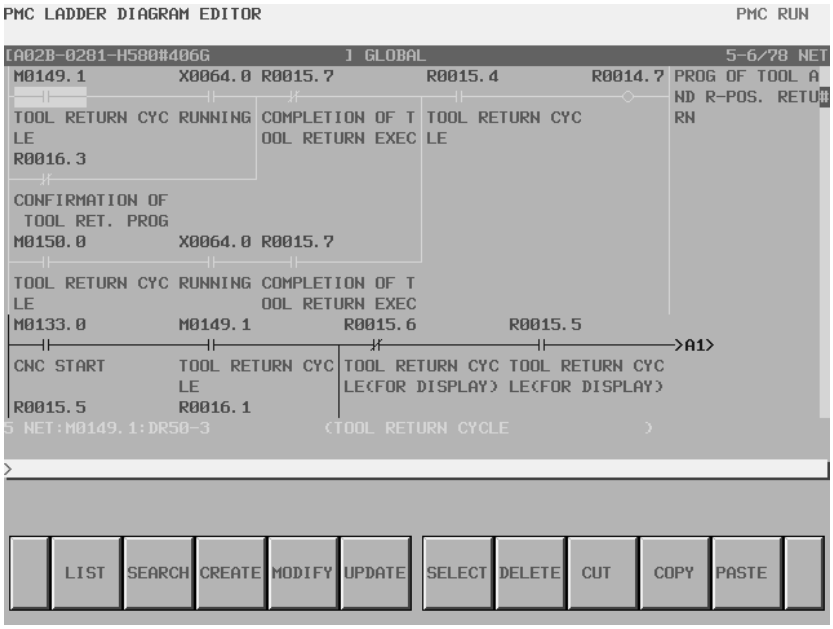

Ladder diagram editing screen

CAUTION

1 A ladder can be edited, regardless of whether operation is in progress or stopped. Before an edited ladder can be executed, however, the ladder must be updated. Press the [UPDATE] soft key or update the ladder when exiting from the ladder diagram editing screen.

2 If the power is turned off without writing an edited sequence program to the flash ROM, the results of editing are cleared. On the input/output screen, write an edited sequence program to the flash ROM. If you specify “YES” for the setting item “Save after Edit” on the PMC parameter setting screen or set K902#0 to 1, a message for confirming whether to write an edited sequence program to the flash ROM upon completion of editing is displayed.

Screen manipulation

Soft keys on the ladder diagram editing screen

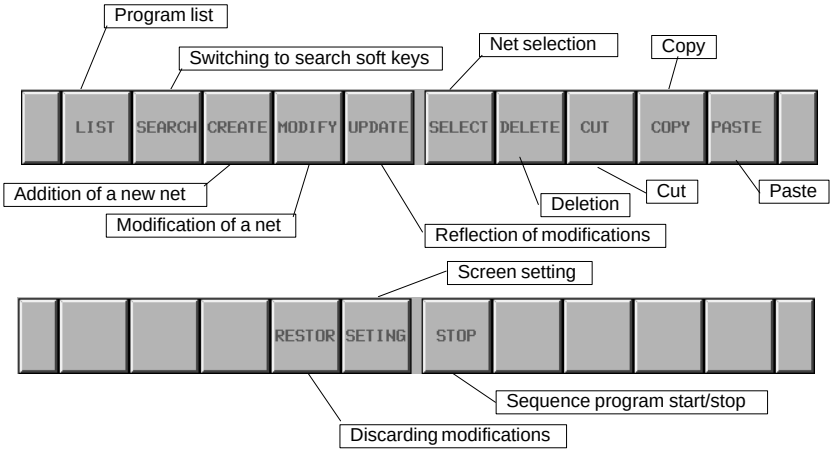

Soft keys on the ladder diagram editing screen

(a) Manipulation using soft keys

1 [LIST] Calling the program list editing screen
This soft key calls the program list editing screen. The program list editing screen enables you to select a subprogram to be edited on the ladder diagram editing screen.

2 [SEARCH] Search/jump menu
This soft key displays the soft keys for search. To return to the main soft key display, use the return key [<]. The method of using the soft keys for search is the same as for the ladder diagram display screen.

3 [MODIFY] Calling the net editing screen
This soft key calls the net editing screen to modify the structure of a selected net.

4 [CREATE] Creating a new net
This soft key adds a new net at the location where the cursor is placed. The screen display switches to the net editing screen. Create a net to be added.

5 [UPDATE] Reflecting modifications
This soft key reflects the results of editing in the ladder being executed. When all modifications have been reflected normally, the execution of the edited ladder starts.

WARNING
Use special care when modifying the ladder program being executed. If the ladder program being executed is modified incorrectly, the timing for reflecting modifications is incorrect, or the machine state is improper, the machine may operate unexpectedly. Before reflecting modifications, be sure to check that the modifications are correct, that the machine state is proper, and that there is no person near the machine.

6 [SELECT] Selection of multiple nets
This soft key is used to specify multiple nets when editing such as deletion, cut, or copy is performed. Determine the start point of a selection range with the [SELECT] soft key, then specify the end point of the selection range by moving the cursor or by using the search function. After net selection, perform editing with editing soft keys. While multiple nets are selected, the addition information line displays information about the selection range.

7 [DELETE] Deleting a net
This soft key deletes selected a net. A net deleted with the [DELETE] soft key is lost. If a net deleted by mistake with the [DELETE] soft key needs to be restored, the entire ladder program needs to be restored to the pre–editing state by using the [RESTORE] soft key.

8 [CUT] Cutting a net
This soft key cuts a selected net. The cut contents are transferred to the buffer for pasting, and are deleted from the ladder diagram. The previous contents of the buffer are lost. When moving a net, use this soft key together with the [PASTE] soft key.

9 [COPY] Copying a net
This soft key transfers a selected net to the buffer for pasting. No change is made to the ladder diagram. The previous contents of the buffer for pasting are lost. When copying a net, use this soft key together with the [PASTE] soft key.

10 [PASTE] Pasting a net
This soft key inserts, at the cursor position, a net that has been transferred to the buffer for pasting with the [CUT] soft key or the [COPY] soft key. Press the [PASTE] soft key while a net is selected with the [SELECT] soft key. The selected net is replaced with the net held in the buffer for pasting. The contents of the buffer for pasting are preserved until the power to the NC is turned off.

11 [RESTOR] Discarding modifications
This soft key discards the results of editing performed so far, and restores the ladder present when the screen display switches to the ladder diagram editing screen or the last update operation has been completed. Use this soft key when restoration is difficult because of incorrect editing.

12 [SETING] Screen setting
This soft key calls the setting screen for the ladder diagram editing screen. Various settings for ladder diagram editing can be modified. To return to the ladder diagram editing screen, use the return key [<].

13 [START]/[STOP] Starting and stopping a ladder
These soft keys control ladder program execution. The [START] soft key starts the execution of a ladder program. The [STOP] soft key stops the execution of a ladder program. When modifications have been reflected normally, the execution of the edited ladder starts.

WARNING

Use special care when starting/stopping a ladder program. If a ladder program is started/stopped when the start/stop timing is incorrect, or the machine state is improper, the machine may operate unexpectedly. Moreover, when a ladder program is stopped, the safety mechanism and monitoring based on the ladder program are disabled. When starting/stopping a ladder program, be sure to check that the machine state is proper, and that there is no person near the machine.

14 [<] Ending editing

This soft key reflects the modifications made so far in the ladder being executed, and ends editing. When you press a function key such as the SYSTEM key during ladder program editing, data being edited is discarded.

WARNING

Use special care when modifying the ladder program being executed. If the ladder program being executed is modified incorrectly, the timing for reflecting modifications is incorrect, or the machine state is improper, the machine may operate unexpectedly. Before reflecting modifications, be sure to check that the modifications are correct, that the machine state is proper, and that there is no person near the machine.

7.3.3.5 Net editing screen

On the net editing screen, net editing operations such as the creation of a new net and the modification of an existing net can be performed.

1 Modification to an existing net:

If the net editing screen is displayed with the [MODIFY] soft key, the mode (modification mode) for modifying the net indicated by the cursor is set.

2 Addition of a new net:

If the net editing screen is displayed with the [CREATE] soft key, the mode (creation mode) for creating a new net from a free state is set.

The net editing screen allows the following editing operations:

- Placing a new contact/coil
  “Bit address” [⊣ ⊢], [—○—] and so forth
- Changing the type of a contact/coil
  [⊣ ⊢], [—○—]and so forth
- Placing a new function instruction [FUNC]
- Changing the type of a function instruction [FUNC]

- Deleting a contact/coil function instruction
  [·····]
- Adding/deleting a connection line
  [———], [↑———], [———↑]
- Editing the function instruction data table [TABLE]
- Line/column insertion
  [INSLIN], [INSCLM], [APPCLM]
- Changing the address of a contact or coil
  “Bit address” + INPUT key
- Changing a function instruction parameter
  “Numeric value/byte address” + INPUT key
- Discarding the contents of editing [RESTOR]

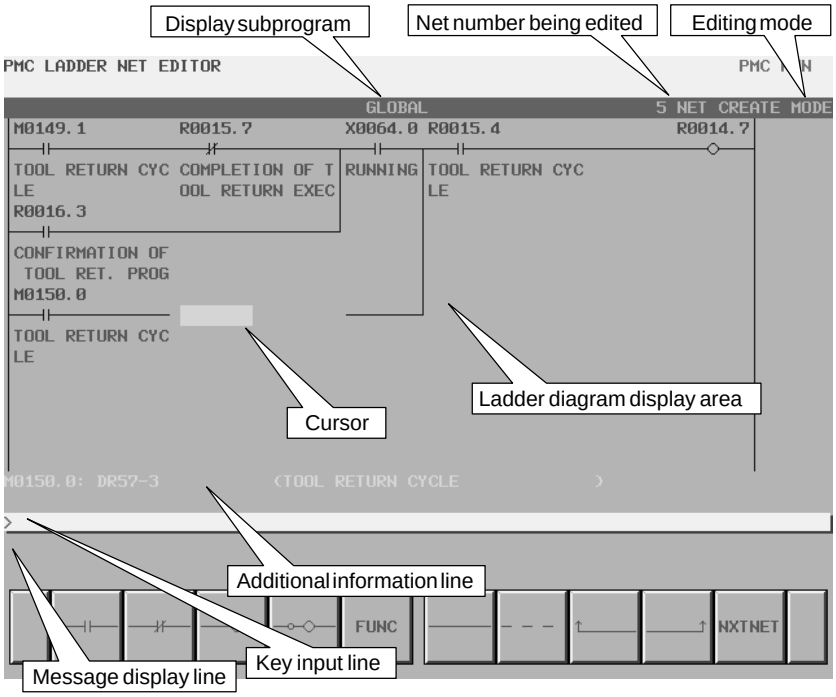

Screen manipulation

Soft keys on the net editing screen

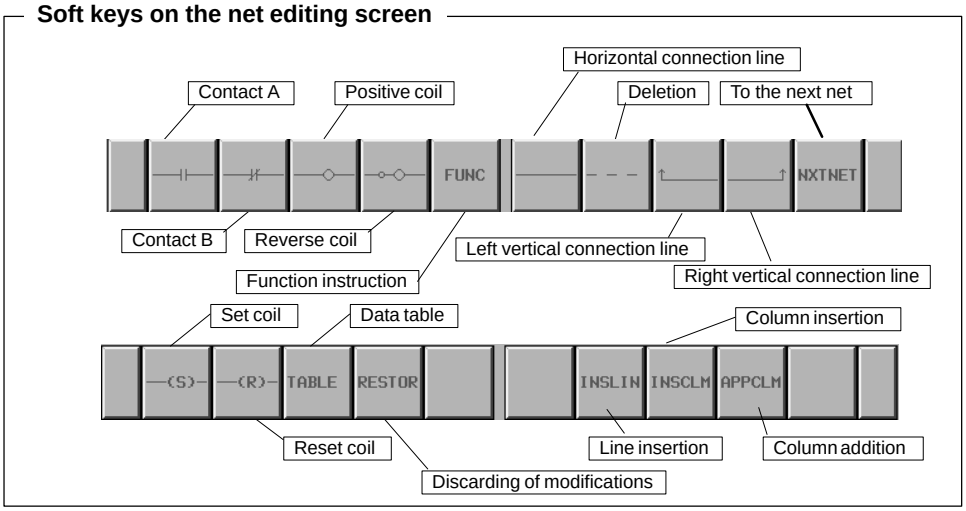

Soft keys on the net editing screen

7.3.3.6 Signal trace function (PMC–SB7)

Signal trace screen (initial screen)

The signal trace screen is displayed when you press the [TRACE] soft key on the PMC diagnosis screen.

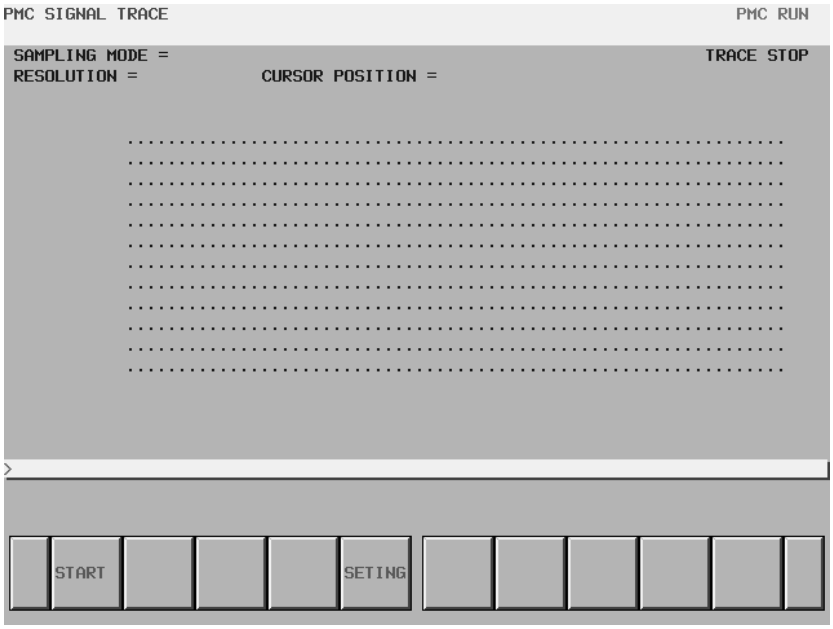

Signal trace screen (initial screen)

Trace parameter setting screen

When you press the [SETING] soft key on the signal trace screen, the trace parameter setting screen is displayed. The setting screen consists of multiple pages. Use the page keys to switch between the pages.

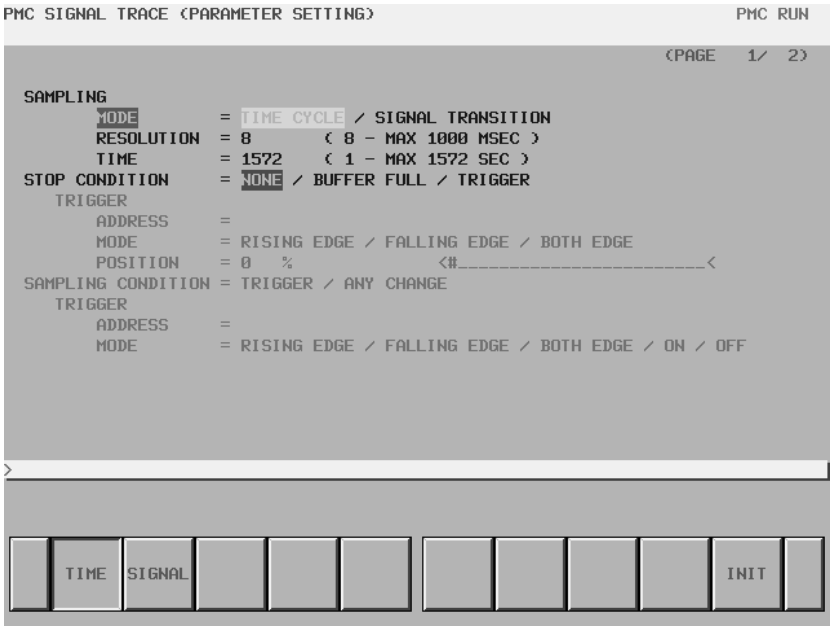

Trace parameter setting screen (page 1)

(a) Sample/mode

Set a sampling mode.

- Period: A time period is used for sampling.
- Signal transition: A signal transition is used for sampling.

(b) Sampling/resolution

Set the resolution of sampling. The default is 8 ms.
The setting range is 8 ms to 1,000 ms.
An input value is rounded off to a multiple of 8 ms.

(c) Sampling/time

This item is displayed when “period” is selected for the sampling mode. Set a desired sampling time.
The allowable input value depends on the setting of “resolution” and the number of sampled signals. An allowable time range is indicated at the right end.

(d) Sampling/frame

This item is displayed when “signal transition” is selected for the sampling mode. Set a desired sampling count.
The allowable input value depends on the setting of “resolution” and the number of sampled signals. An allowable time range is indicated at the right end.

(e) Stop condition

Set a trace stop condition.

- None: Trace operation is not automatically stopped.
- Buffer full: Trace operation is stopped when the sampling buffer is full.
- Trigger: Trace operation is stopped by a trigger.

(f) Stop condition/trigger/address

This item becomes settable when “trigger” is selected as the trace stop condition. Set a trigger address for stopping trace operation.

(g) Stop condition/trigger/mode

This item becomes settable when “trigger” is selected as the trace stop condition. Set a trigger mode for stopping trace operation.

- Rising: Trace operation is automatically stopped on a rising edge of the trigger signal.
- Falling: Trace operation is automatically stopped on a falling edge of the trigger signal.
- Transition: Trace operation is automatically stopped when the trigger signal makes a transition.

(h) Stop condition/trigger/position

This item becomes settable when “trigger” is selected as the trace stop condition. Set a position in the entire sampling time (or count) where a stop trigger is initiated, by using a ratio to the sampling time (or count). Set a proper value as required. For example, set a larger value when checking the signal before the trigger condition, or set a smaller value when checking the signal after the trigger condition.
Example: Graph display range when the sampling time is 10 seconds and the sampling position is 10%

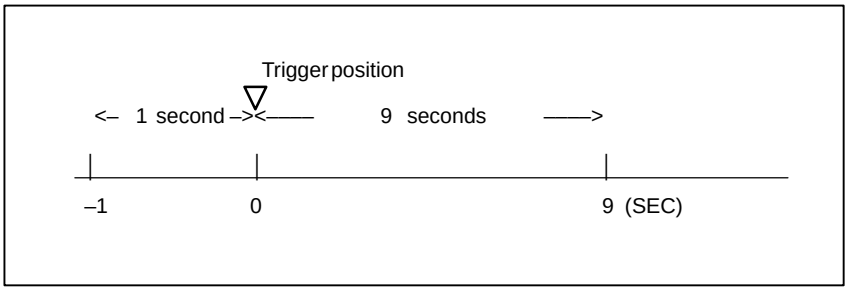

(i) Sampling condition

This item becomes settable when “signal transition” is selected as the trace stop condition. Set a condition for sampling.

- Trigger: Sampling is performed when a sampling trigger condition is satisfied.
- Transition: Sampling is performed when the signal at the sampling address makes a transition.

(j) Sampling condition/trigger/address

This item becomes settable when “signal transition” is selected as the sampling mode and “trigger” is selected as the sampling condition. Set a sampling trigger address.

(k) Sampling condition/trigger/mode

This item becomes settable when “signal transition” is selected as the sampling mode and “trigger” is selected as the sampling condition. Set a trigger condition mode.

- Rising: Sampling is performed on a rising edge of the trigger signal.
- Falling: Sampling is performed on a falling edge of the trigger signal.
- Transition: Sampling is performed when the trigger makes a transition.
- On: Sampling is performed when the trigger signal is on.
- Off: Sampling is performed when the trigger signal is off.

Sampling address setting

(a) Address setting

On page 2 of the trace parameter setting screen, set the address of a signal to be sampled.

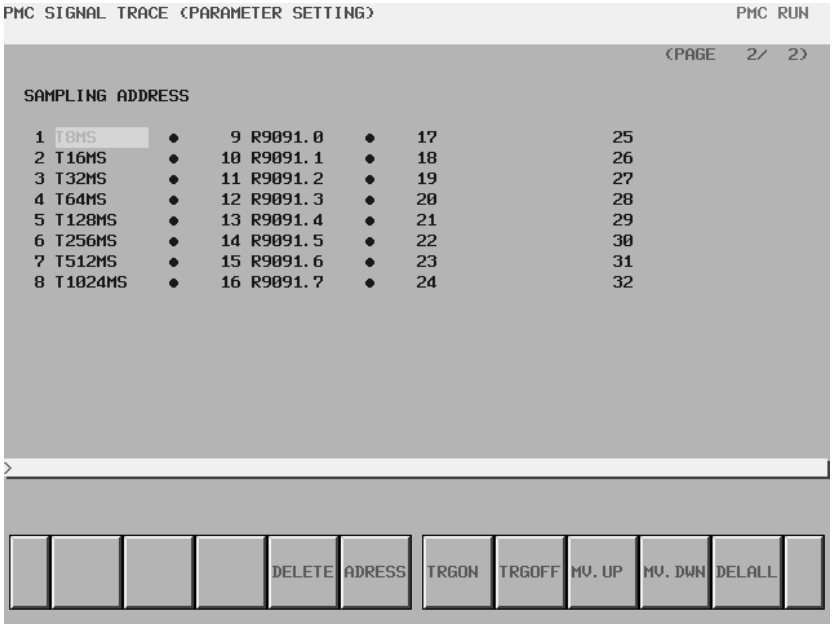

Trace parameter setting screen (page 2)

Specify a bit address for a signal address. If a byte address is input, bits 0 to 7 of the input address are input. Up to 32 signal address points can be set.

NOTE

Depending on the number of points of signal addresses subject to sampling and the sampling resolution, the maximum allowable input value for the sampling time or frame increases or decreases.

If the maximum allowable input value becomes smaller than an existing sampling time or frame value, the message below is displayed, and the setting is changed. (In the messages below, xxx represents a maximum allowable input value.)

a) When a sampling time is set
   "The sampling time has decreased to xxx seconds."
b) When a sampling frame is set
   "The sampling frame has decreased to xxx seconds."

Trace execution

After trace parameter setting, press the [START] soft key on the trace screen. Trace operation is started.
The screens below are examples of execution in the period mode and signal transition mode.

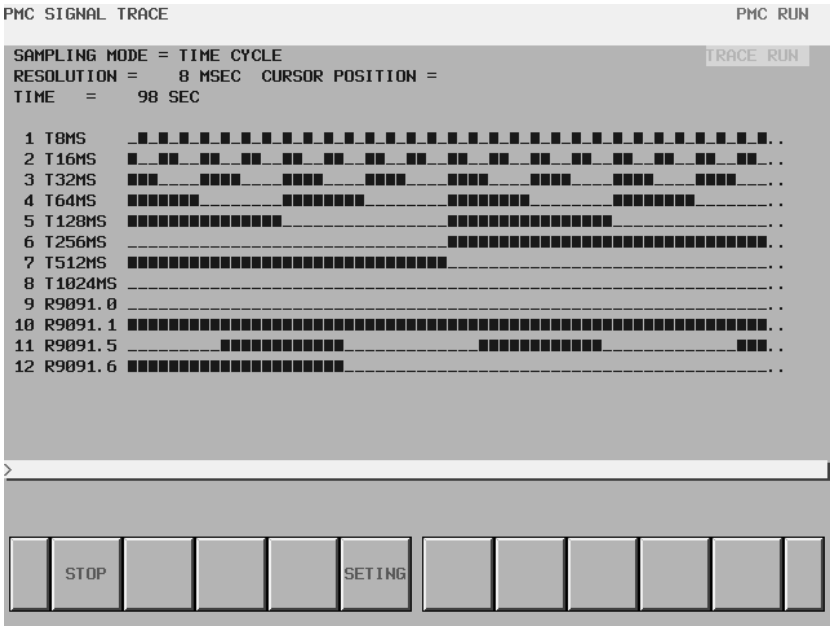

Signal trace execution screen (time cycle mode)

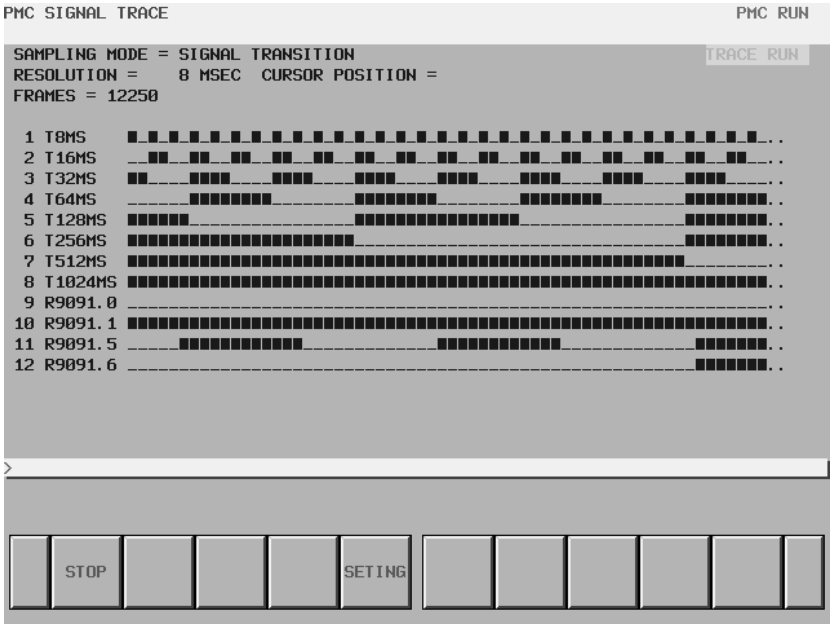

Signal trace execution screen (signal transition mode)

During trace execution, the results of trace operation are displayed in real–time mode. When the trace stop condition set in the trace parameter setting screen is satisfied, trace execution stops. Pressing the [STOP] soft key also stops trace execution. In the signal transition mode, sampling is performed when a signal transition is made. So, trace display is not updated until a trigger signal transition is made.

Checking trace results

Upon completion of trace execution, trace results can be checked.

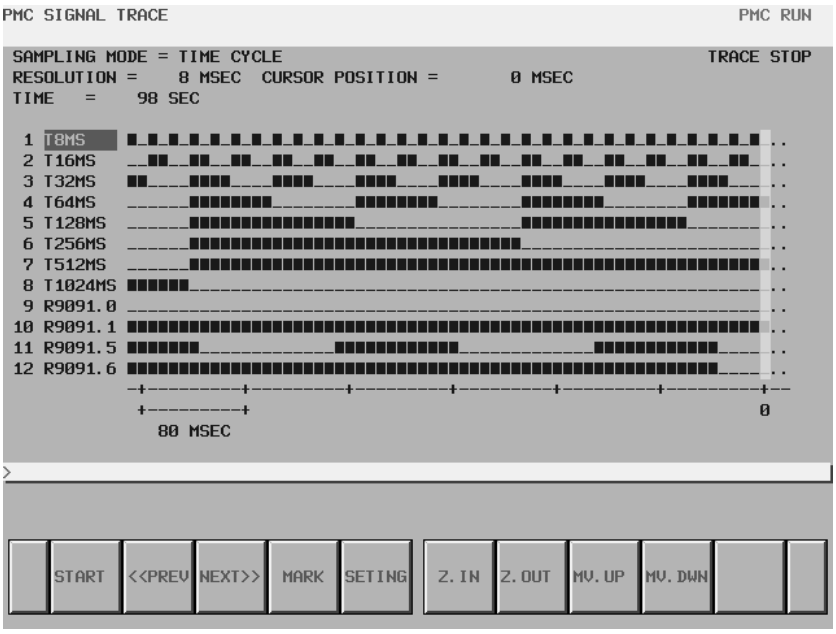

Signal trace result screen (time cycle mode)

(a) Automatic selection range calculation display

When you press the [MARK] soft key, the cursor position at that time is marked, and a mark cursor is displayed. If the mark cursor and the current position cursor are placed at the same position, the current position cursor takes priority. At the top of the screen, a mark position indicating the mark cursor position and range information indicating the range from the mark cursor position to the current position cursor are displayed. These values change as the current position cursor move. To cancel the range selection, press the [MARK] soft key again.

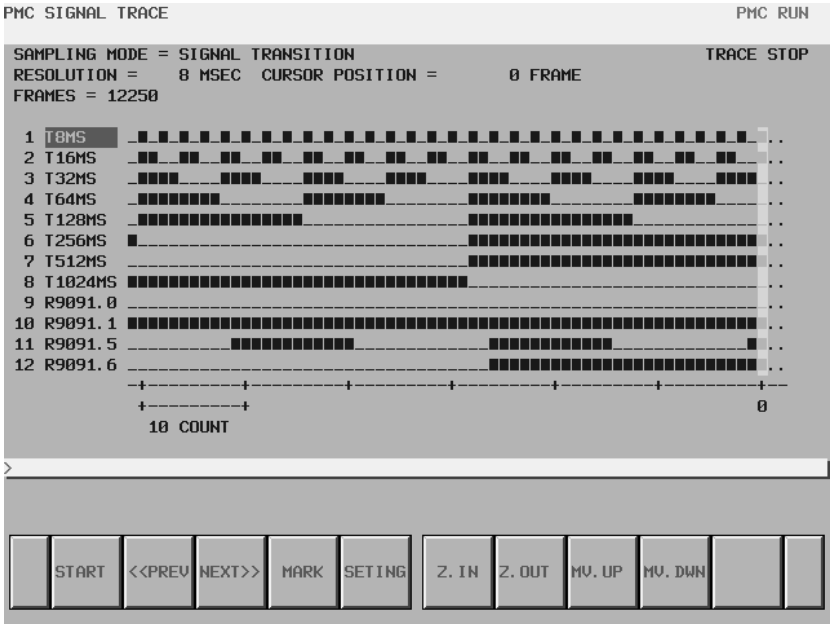

Signal trace result screen (mark cursor display)

(b) Enlarged/reduced trace result data display

With the [Z.IN] or [Z.OUT] soft key, the graph can be enlarged or reduced. This operation changes the scale value of one graph division. Immediately after trace operation, the graph is enlarged to a maximum extent. If reduced display disables ON/OFF changes from being displayed precisely, “X” is used for graph display as shown below. Reduced display is possible until all trace results are held on one page.

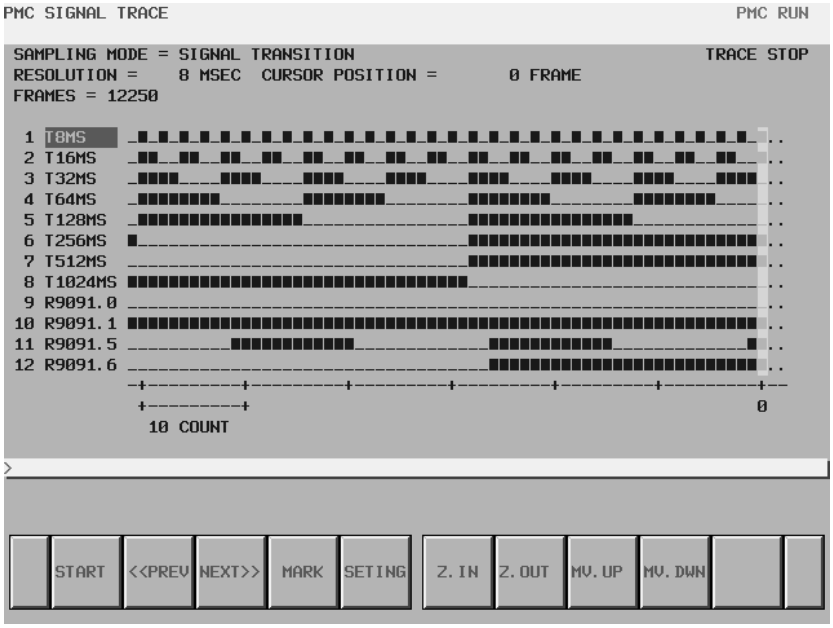

Signal trace result screen (reduced display)

7.3.4 PMCDGN Screen

Press soft key **[PMCDGN]** then PMC's diagnostic screen is displayed.

- **TITLE screen**

The title data registered when a ladder program is prepared is displayed.

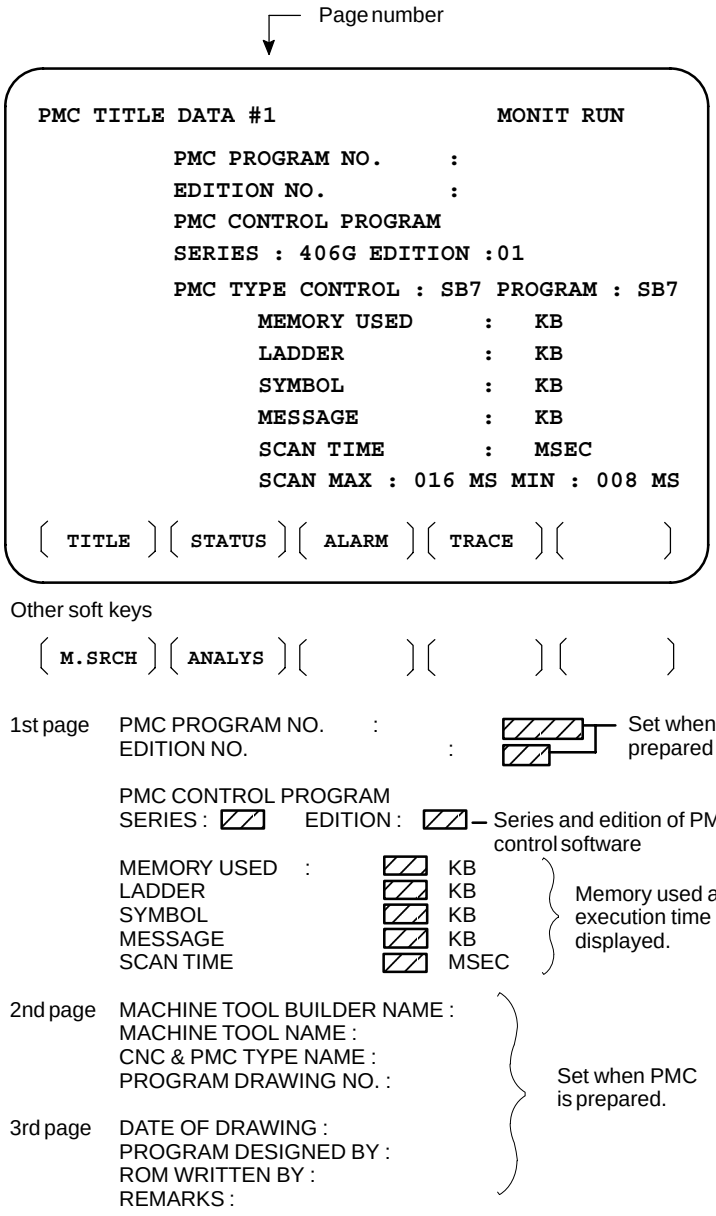

- **STATUS screen**

On/Off state of input/output signals and internal relay is displayed.

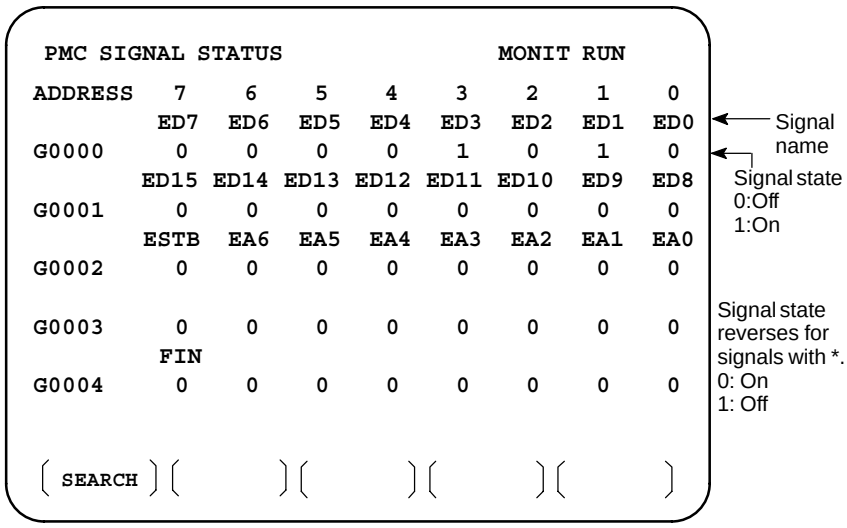

[Search Method]

- PAGE ↓ / PAGE ↑ key :Forward and Backward by screen
- ↓ / ↑ key :Forward and Backward by diagnostic number
- To search a specified address or signal name, input an address number or signal name and press **[SEARCH]**.

- **Alarm screen**

Displays an alarm generated in PMC.

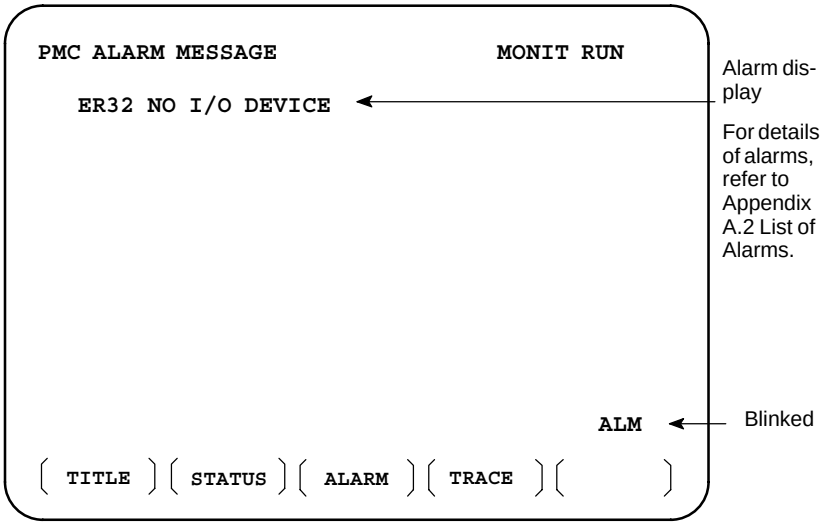

- **TRACE screen (PMC–SA1)**

Every time a specified signal changes, the signal status is memorized in the trace memory. This function is useful for identifying intermittent troubles.

1 Trace parameter screen

```
PMC SIGNAL TRACE                    MONIT RUN
 TRACE MODE          :
 (0:1BYTE/1:2BYTE/2:WORD)
 1STTRACE  ADDRESS  CONDITION
   ADDRESS  TYPE     : (0:PMC/1:PHY)
   ADDRESS           :
   MASK  DATA        :
 2NDTRACE  ADDRESS  CONDITION
   ADDRESS  TYPE     : (0:PMC/1:PHY)
   ADDRESS           :
   MASK  DATA        :


[ T.DISP ][  EXEC  ][       ][       ][       ]
```

Changes to a trace memory display screen (Screen on the next page)

Select each item by cursor key

a. TRACE MODE: Select the trace mode
   0=Records changes of 1–byte signals
   1=Records changes of independent 2–byte signals
   2=Records changes of consecutive 2–byte signals

b. ADDRESS TYPE:
   0=PMC address is used for tracing address.
   1=Physical address is used for tracing address.
   (Mainly used for C–language program)

c. ADDRESS:Set a tracing address.

d. MASK DATA: The bits to be traced are specified by a hexadecimal number (2 digits).
   For example, to trace the signals at bit 7,6,5 and 0, set E1 (hexadecimal) to MASK DATA.

	#7	#6	#5	#4	#3	#2	#1	#0
E1→	1	1	1	0	0	0	0	1

   However, even if bit 4,3,2 and 1 changes, tracing (memory registration) cannot be done but signal status is memorized when a tracing is executed.
   [Correspondence of binary and hexadecimal number]

   $0000_2 : 0_{16}$ $0001_2 : 1_{16}$ $0010_2 : 2_{16}$ $0011_2 : 3_{16}$
   $0100_2 : 4_{16}$ $0101_2 : 5_{16}$ $0110_2 : 6_{16}$ $0111_2 : 7_{16}$
   $1000_2 : 8_{16}$ $1001_2 : 9_{16}$ $1010_2 : A_{16}$ $1011_2 : B_{16}$
   $1100_2 : C_{16}$ $1101_2 : D_{16}$ $1110_2 : E_{16}$ $1111_2 : F_{16}$

2 Trace memory contents display screen

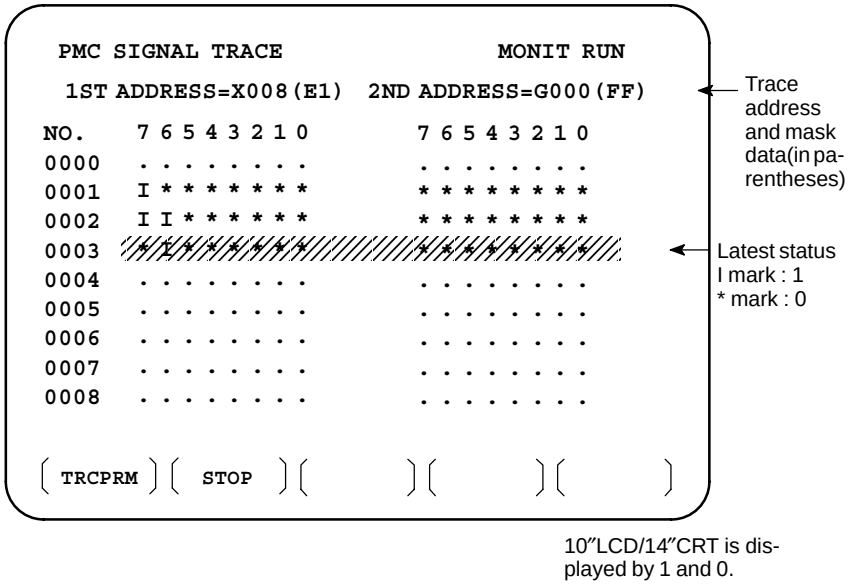

10″LCD/14″CRT is displayed by 1 and 0.

a. Soft key **[TRCPRM]**: Return to the trace parameter setting screen (screen of previous page)

b. Soft key **[EXEC]**: Starts tracing.
Trace memory is cleared and each time a specified signal changes, its status is recorded. Trace memory is 256 bytes and if tracing is executed 128 times by 2–byte tracing, tracing is executed again from the head of memory.

c. Soft key **[STOP]**: Ends the tracing.

*The tracing parameters are held even if the power is turned off.

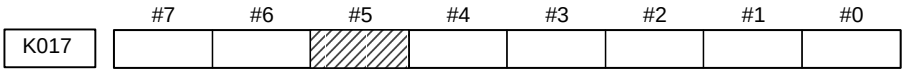

#5 0 : Tracing starts by **[EXEC]**.

1 : Tracing starts automatically after power on

7.3.5 PMCPRM Screen

- **Inputting PMC parameters from the MDI**

1 Set to MDI mode or emergency stop state.

2 Set PARAMETER WRITE (on setting screen) to 1 or set the program protect signal (KEY4) to 1.

	PWE	KEY4	
Timer	○	–	
Counter	○	○	Either one
Keep relay	○	–	
Data table	○	○	Either one

3 Press a soft key and select a required screen.
[TIMER] :Timer screen
[COUNTR] :Counter screen
[KEEPRL] :Keep relay screen
[DATA] :Data table screen

4 Press cursor key and move the cursor to a desired number.

5 Input a numeric key and press INPUT key and data is input.

6 After the data is input, set PARAMETER WRITE or KEY4 on setting screen to 0.

- **TIMER screen**

This screen is used for setting timer time of the functional instruction (SUB 3).

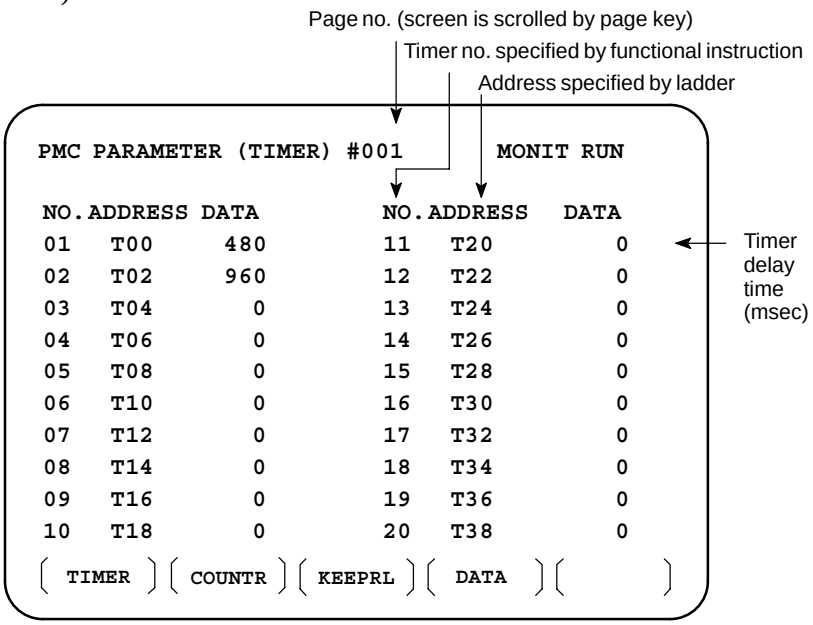

Timer set time : Timer no. 1–8 is max. 1572.8 sec and its accuracy is 48ms.
Timer no. 9 is max. 262.1 sec and its accuracy is 8ms.

- **COUNTER screen**

This screen sets and displays max. value of counter and current value of the counter instruction (SUB 4).

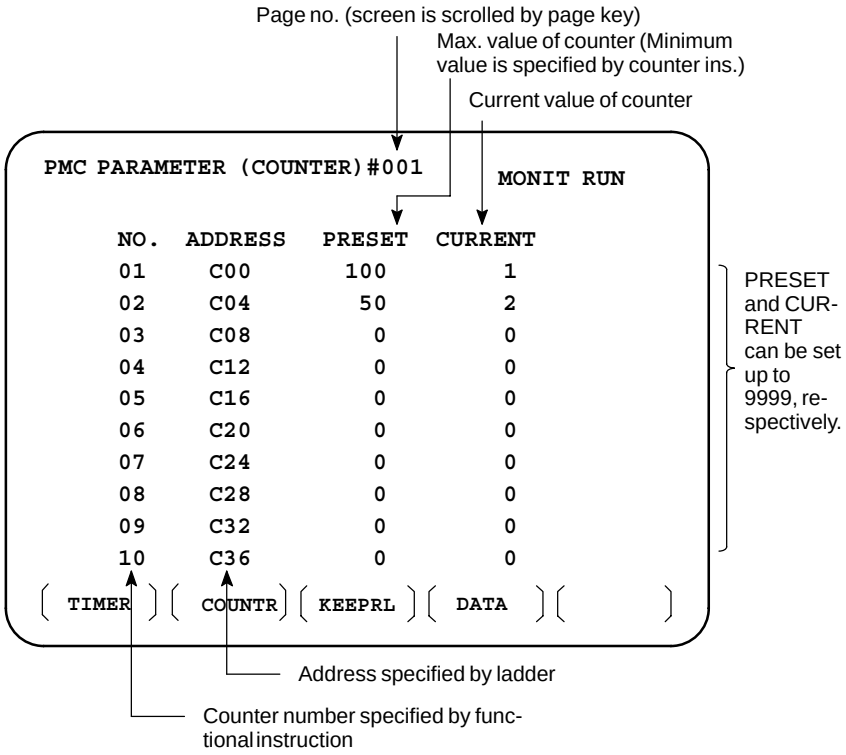

- **KEEP RELAY screen**

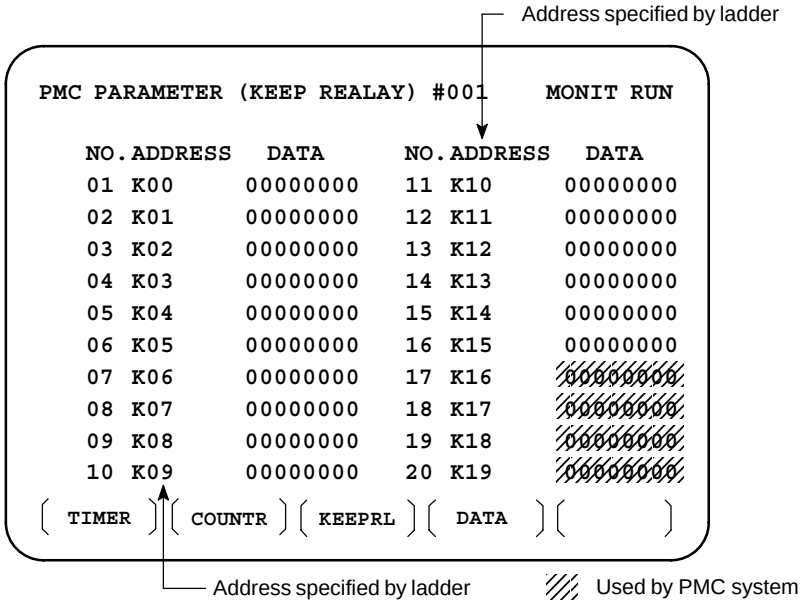

Nonvolatile memory control

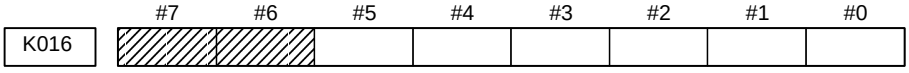

#7(MWRTF2) : For checking the writing status in nonvolatile memory
#6(MWRTF1) : Writing status in nonvolatile memory

● **DATA TABLE screen**

1 Data table setting screen

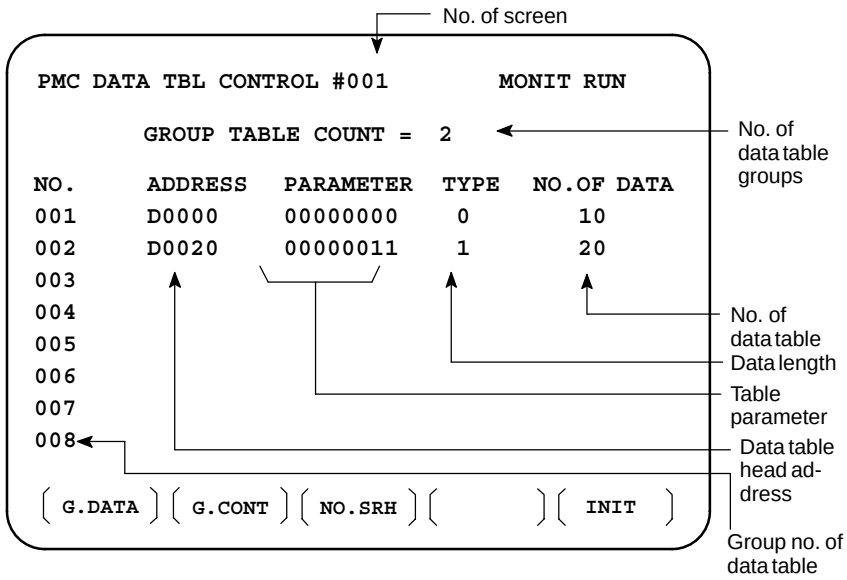

a. Soft key **[G.DATA]** : Select data display screen of data table. (Next screen)

b. NO. OF GROUPS **[G.CONT]**: Set the no. of groups of data table.

c. Group No. **[NO.SRH]**: Move the cursor to a specified group.

d. Soft key **[INIT]**: Initializes the setting of data table.
No. of groups is 1, ADDRESS is D0000, PARAMETER is 0000000, TYPE is 0, NO. OF DATA is 1860.

This operation is done usually when a sequence program is prepared. When PMC parameters are set, internal parameters are not affected.

PARAMETER

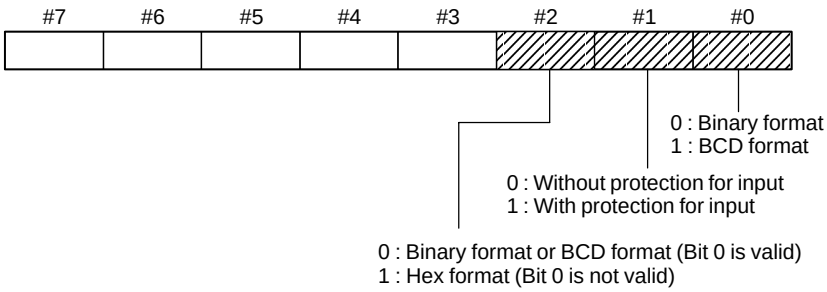

TYPE

0 : 1–byte length 1 : 2–byte length 2 : 4–byte length

e. Using the page key PAGE ↓ / PAGE ↑, next screen/previous screen can be selected.

2 Data display screen

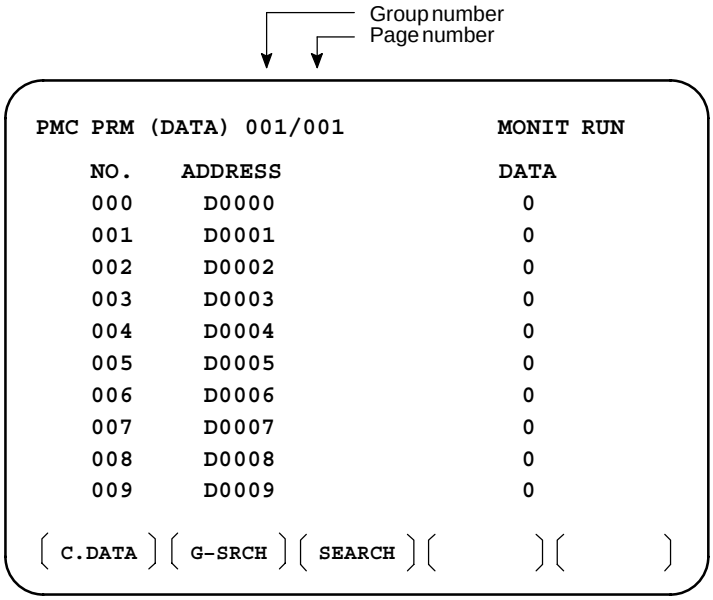

a. Soft key **[C.DATA]** :Returns to the data table setting screen. (Previous screen)

b. Group No. **[G–SRCH]** : Head of the specified group is selected.

c. Address **[SEARCH]**: Searches an address in a group currently selected.

7.3.6 Setting Screen

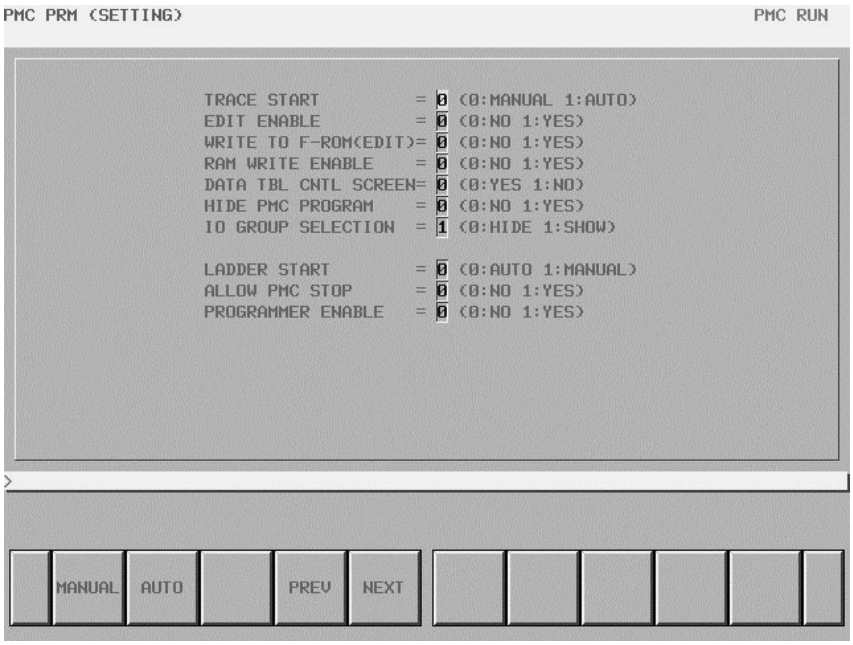

Setting screen for PMC–SB7

- Trace function start (PMC–SB7:K906.5)
  - Manual (0): The trace function starts trace operation when the [EXEC] soft key is pressed.
  - Automatic (1): The trace function starts sampling automatically after the power is turned on.
- Enable editing (PMC–SB7:K901.6, PMC–SA1:K18.6)
  - No (0): The editing of a sequence program is disabled.
  - Yes (1): The editing of a sequence program is enabled.
- Save after editing (PMC–SB7:K902.0, PMC–SA1:K19.0)
  - No (0): After ladder editing, the F–ROM is not written to automatically.
  - Yes (1): After ladder editing, the F–ROM is written to automatically.
- Enable memory write (PMC–SB7:K900.4, PMC–SA1:K17.4)
  - No (0): The forcing function and the override function are disabled.
  - Yes (1): The forcing function and the override function are enabled.
- Data table GRP setting display (PMC–SB7:K900.7, PMC–SA1:K17.7)
  - Yes (0): The PMC parameter data table control screen is displayed.
  - No (1): The PMC parameter data table control screen is not displayed.
- Disable PMC program read (PMC–SB7:K900.0, PMC–SA1:K17.0)
  - No (0): The reading of a sequence program is enabled.
  - Yes (1): The reading of a sequence program is disabled.
- IO Group selection (PMC–SB7:K906.1)
  - Hide (0): The I/O assignment data selection function setting screen is not displayed.
  - Show (1): The I/O assignment data selection function setting screen is displayed.
- PMC program execution (PMC–SB7:K900.2, PMC–SA1:K17.2)
  - Automatic (0): After the power is turned on, a sequence program is automatically executed.
  - Manual (1): A sequence program is executed by pressing the sequence program execution soft key.
- Enable PMC stop (PMC–SB7:K902.2, PMC–SA1:K19.2)
  - No (0): The execution/stop operation of a sequence program is disabled.
  - Yes (1): The execution/stop operation of a sequence program is enabled.
- Enable the programmer function (PMC–SB7:K900.1, PMC–SA1: K17.1)
  - No (0): The built–in programmer function is not operated.
  - Yes (1): The built–in programmer function is operated.

7.3.7 Online Setting

7.3.7.1 Online setting screen

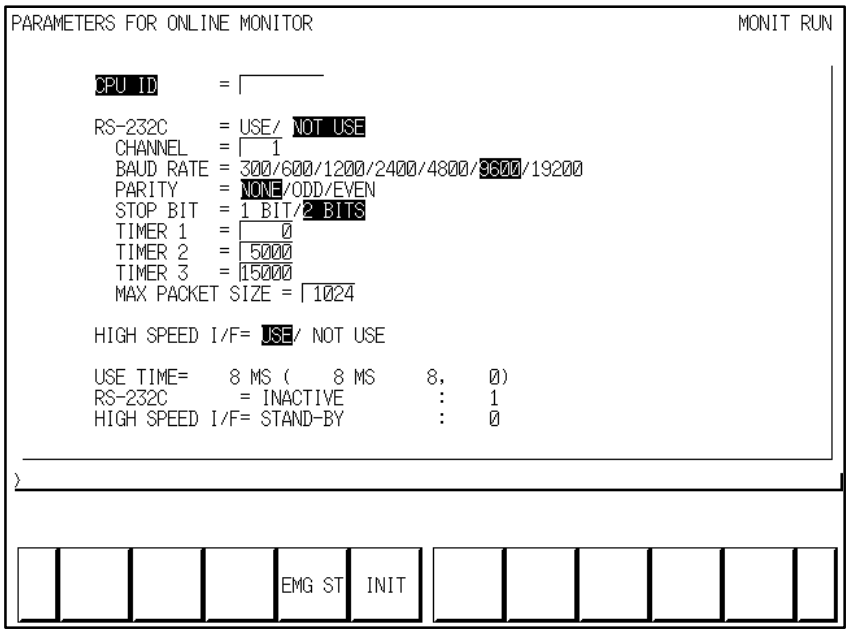

Fig. 7.3.7.1 Online monitor setting screen

Meanings of Soft key

EMG ST: Terminates communication forcibly. Use this key if communication becomes abnormal and the connection cannot be terminated normally.

INIT: Initializes the parameters to their default values.

NOTE
1 In case of configuration of CNC with which neither Ethernet nor HSSB is available, the item of ”HIGH SPEED I/F” is not displayed.
2 In case of display which has 5+2 soft key, two pages are used for this setting screen.
Switch the page by < Page Up > or <Page Down> key.

7.3.7.2 Setting of online connection

To display the soft key [MONIT] in the PMC main menu screen, set ”PROGRAMMER ENABLE” to ”YES” in the setting screen. When pushing the soft key [MONIT]→[ONLINE], the online setting screen is displayed.

1 Case of connection by RS–232C (FAPT LADDER–II, FAPT LADDER–III)

(1) Check that ”NOT USE” is selected at the ”RS–232C” item.

(2) Set the parameter of ”CHANNEL” and ”BAUD RATE”.

(3) Move the cursor to the ”RS–232C” item with Up or Down Cursor key.

(4) Select ”USE” with Left or Right Cursor key.

2 Case of connection by Ethernet (FAPT LADDER–III, Ladder Editing Package)

(1) Move the cursor to the ”HIGH SPEED I/F” item with Up or Down Cursor key.

(2) Select ”USE” with Left or Right Cursor key.

3 Case of connection by HSSB (Ladder Editing Package)

(1) Move the cursor to the ”HIGH SPEED I/F” item with Up or Down Cursor key.

(2) Select ”USE” with Left or Right Cursor key.

NOTE
1 When both ”RS–232C = USE” and ”HIGH SPEED I/F = USE” are selected, the PMC system will communicate with the application which is connected at first. If PMC system is already connecting with an application, it can not connect with other applications.
2 When you use the online function by Ethernet, the setting of Ethernet parameters at CNC is necessary in advance.
3 Loader control function can not connect with FAPT LADDER–III or Ladder Editing Package by Ethernet.

7.3.7.3 Communication Status

The communication status of RS–232C and HIGH SPEED I/F are displayed at the online monitor screen during the online communication.

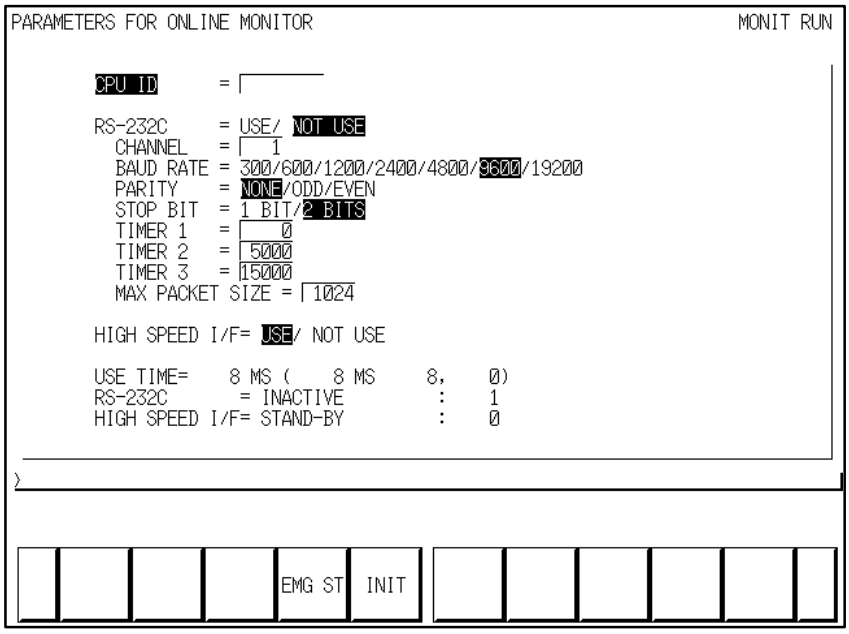

Fig. 7.3.7.3 Online monitor setting screen

USE TIME	:	The maximum time in the communication processing is displayed.
RS–232C	:	The communication condition of RS–232C is displayed.
HIGH SPEED I/F	:	The communication condition of HIGH SPEED I/F is displayed.
ETHER_BOARD	:	Displayed during the communication with Ethernet board. The IP address of the communication partner is displayed.
EMB_ ETHERNET	:	Displayed during the communication with embedded Ethernet. The IP address of the communication partner is displayed.
HSSB	:	Displayed during the communication with HSSB.

The display messages and the meanings are shown in the table of below.

Displayed messages	Meanings
INACTIVE	The communication is inactive.
STOPPING	The communication is being stopped. (Wait for the termination of communication)
STARTING	The communication is being started. (Wait for the termination of communication over another communication path)
STAND–BY	The communication is active and in standby mode.
CONNECTED	The communication is active and being connected.
NO OPTION	The port can be not opened because there is not option of RS–232C.
BAD PARAMETER	Invalid open parameters are specified.
TIMEOUT ERROR	A time–out has occurred and communication is aborted.
TIMEOUT(K) ERROR	A time–out has occurred and communication is aborted.
BCC ERROR	A Block Check Code (packet parity) error has occurred.
PARITY ERROR	A parity error has occurred.
OVER–RUN ERROR	A reception overrun has occurred and the communication can not recover.
SEQUENCE ERROR	Packets are out of sequence. (Incorrect procedure)
DATA ERROR	Incorrect packets have been received through retry process.
QUEUE OVERFLOW	The transmit/receive queue has overflowed.
DISCONNECTED	Communication has been terminated successfully.
NO CONNECTION	The cable is disconnected.

7.4 LIST OF SIGNALS BY EACH MODE

● Automatic operation

MODE		INPUT/OUTPUT SIGNAL	FEED RATE, ETC
AUTOMATIC OPERATION	EDIT	[PMC ⇒ CNC] KEY3(Program protect key)	
	MEM MDI RMT	[PMC ⇒ CNC] ST (Cycle start) *SP (Feed hold) SBK (Single block) DRN (Dry run) BDT1 to 9 (Block delete) MIα (Mirror image) STLK (Start lock:16T/18T) CDZ (Chamfering:16T/18T) SMZ (In–position check:16T/18T) PN1 to 8 (External program no. search) MINP (External program input) DNCI (DNC input mode) DMMC (C direct operation) HSα1A to D (Handle interrupt axis select) AFL (Auxiliary function neglect) FIN, MFIN2, MFIN3 (Auxiliary function complete) MFIN, SFIN, TFIN, BFIN (High speed M/S/T function complete) GR1, 2 (Gear input 16T/ 18T) *SSTP (Spindle stop) SAR (Spindle speed arrival) SOR (Spindle orientation)	[PMC ⇒ CNC] *FV0 to 7 (Feed rate override) *AFV0 to 7 (2nd feed rate override) OVC (Override cancel) ROV1,ROV2, HROV, *HROV0 to 6 (Rapid traverse override) SOV0 to 7 (Spindle speed override)
		[CNC ⇒ PMC] STL (Cycle start LED) SPL (Feed hold LED) MF, M00 to M31 MF2, M200 to M215 MF3, M300 to M315 } (Miscellaneous function) SF, S00 to S31 (Spindle speed function) TF, T00 to T31 (Tool function) BF, B00 to B31 (2nd miscellaneous func.) DEN (Distribution end) OP (automatic operating) GR1O to GR3O(Gear selection:16M/18M)	

● Manual operation

MODE			INPUT/OUTPUT SIGNAL	FEED RATE, ETC
MANUAL OPERATION	Handle/ incremental		[PMC ⇒ CNC] HSnA to D (Axis selection) n:1 to 3(No. of MPGs) +α, –α (Jog feed)	[PMC ⇒ CNC] MP1, MP2 (Multiplier)
	JOG		[PMC ⇒ CNC] RT (Rapid traverse)	[PMC ⇒ CNC] *JV0 to 15 (Manual feedrate override) +α, –α (Manual feed move command) ROV1, ROV2 HROV *HROV0 to 6 (Rapid traverse override)
		ZRN	[PMC ⇒ CNC] ZRN(Reference position return mode) [MT ⇒ CNC] *DECα (Reference position deceleration)	
			[CNC ⇒ PMC] ZPα ZP2α, ZP3α, ZP4α (Reference position return completion)	

● Others

Others	[PMC ⇒ CNC] MD1 to 4 (Mode selection) *ESP (Emergency stop) KEY1 to 4 (Memory protection key) MLK,MLKα (All axes/ each axis machine lock) *IT,*ITα (All axes/ each axis machine lock) *±MITα (interlock per axis and direction:M series) STLK (Start lock:T series) *ABSM (Manual absolute) SVFα (Servo off) *FLWP (Follow up) ERS (External reset) RRW (Reset & Rewind) EXLM (Stored stroke limit external switching) ±LMα, RLSOT (Software limit external setting M series) *±Lα (Overtravel limit) *±EDα (External deceleration of each axis)
	[CMC ⇒ PMC] MA (NC ready) SA (Servo ready) AL (NC alarm) RST (Resetting) BAL (Battery alarm) INPα (In–position) MVα (Axis moving) TAP (Tapping)

7.5 LIST OF INPUT/ OUTPUT SIGNALS

(1) For 1–path control

The relationship of the addresses of the interface signals transferred between the CNC and PMC are shown below.

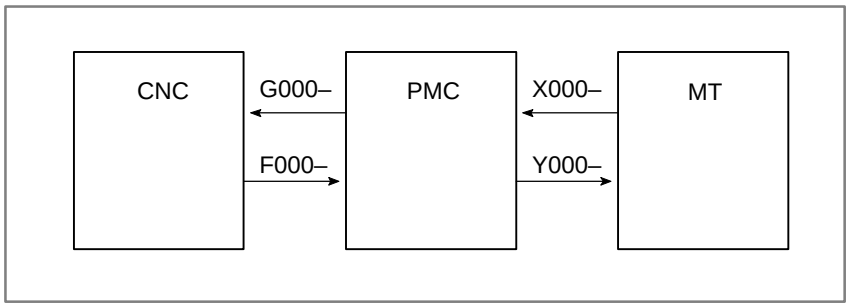

(2) For 2–path control

The relationship of the addresses of the interface signals transferred between the CNC and PMC are shown below. Some signals common to both paths are included in the signals of path 1.

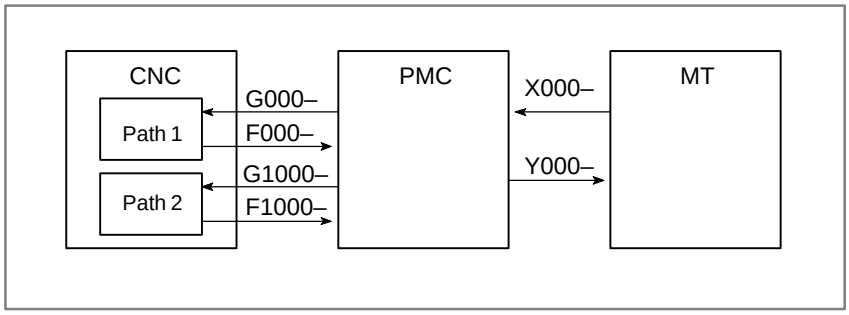

● List of input/output signals

○ : Available
● : Available only with 2–path control
– : Unavailable

Symbol	Signal name	Address	T series	M series
*+ED1 to *+ED8	External deceleration signal	G118	○	○
*+L1 to *+L8	Overtravel signal	G114	○	○
*-ED1 to *-ED8	External deceleration signal	G120	○	○
*-L1 to *-L8	Overtravel signal	G116	○	○
*ABSM	Manual absolute signal	G006#2	○	○
*AFV0 to *AFV7	2nd feedrate override signal	G013	○	○
*BECLP	B–axis clamp completion signal	G038#7	–	○
*BEUCP	B–axis unclamp completion signal	G038#6	–	○
*BSL	Block start interlock signal	G008#3	○	○
*CHLD	Chopping hold signal	G051#7	–	○
*CHP8 to *CHP0	Chopping feedrate override signals	G051#0 to #3	–	○
*CRTOF	Automatic erase CRT screen display cancel signal	G062#1	○	○
*CSL	Cutting block start interlock signal	G008#1	○	○
*DEC1 to *DEC8	Deceleration signal for reference position return	X009	○	○
*EAXSL	Control axis selection status signal(PMC axis control)	F129#7	○	○
*ESP	Emergency stop signal	X008#4	○	○
*ESP		G008#4	○	○
*ESPA	Emergency stop signal (serial spindle)	G071#1	○	○
*ESPB		G075#1	○	○
*ESPC		G205#1	○	○
*ESPD		G267#1	○	○
*FLWU	Follow–up signal	G007#5	○	○
*FV0 to *FV7	Feedrate override signal	G012	○	○
*FV0E to *FV7E	Feedrate override signal (PMC axis control)	G151	○	○
*FV0O to *FV7O	Software operator's panel signal(*FV0 to *FV7)	F078	○	○
*HROV0 to *HROV6	1% step rapid traverse override signal	G096#0 to #6	○	○
*IT	Interlock signal	G008#0	○	○
*IT1 to *IT8	Interlock signal for each axis	G130	○	○
*JV0 to *JV15	Manual feedrate override signal	G010,G011	○	○
*JV0O to *JV15O	Software operator's panel signal(*JV0 to *JV15)	F079,F080	○	○
*PLSST	Polygon spindle stop signal	G038#0	○	–
*SCPF	Spindle clamp completion signal	G028#5	○	–
*SP	Feed hold signal	G008#5	○	○
*SSTP	Spindle stop signal	G029#6	○	○

Symbol	Signal name	Address	T series	M series
*SSTP1	Individual spindle stop signals	G027#3	○	○
*SSTP2		G027#4	○	○
*SSTP3		G027#5	○	○
*SSTP4		G026#6	○	○
*SUCPF	Spindle unclamp completion signal	G028#4	○	–
*TLV0 to *TLV9	Tool life count override signal	G049#0 to G050#1	–	○
*TSB	Tailstock barrier select signal	G060#7	○	–
+EXL1 to +EXL8	Axis direction dependent stored stroke limit switch signal	G104	○	○
+J1 to +J8	Feed axis and direction selection signal	G100	○	○
+J1O to +J4O	Software operator's panel signal(+J1 to +J4)	F081#0,#2,#4,#6	○	○
+Jg, –Jg, +Ja, –Ja	Feed axis and direction selection signals	G086#0 to #3	○	○
+LM1 to +LM8	Stroke limit external setting signal	G110	–	○
+MIT1,+MIT2	Manual feed interlock signal for each axis	X004#2,#4	○	–
+MIT1,+MIT2	Tool offset write signal	X004#2,#4	○	–
+MIT1 to +MIT4	Interlock signal for each axis and direction	G132#0 to #3	–	○
+OT1 to +OT8	Stroke limit reached signals	F124	–	○
–EXL1 to –EXL8	Axis direction dependent stored stroke limit switch signal	G105	○	○
–J1 to -J8	Feed axis and direction selection signal	G102	○	○
–J1O to –J4O	Software operator's panel signal(–J1 to –J4)	F081#1,#3,#5,#7	○	○
–LM1 to –LM8	Stroke limit external setting signal	G112	–	○
–MIT1,–MIT2	Manual feed interlock signal for each axis	X004#3,#5	○	–
–MIT1,–MIT2	Tool offset write signal	X004#3,#5	○	–
–MIT1 to –MIT4	Interlock signal for each axis and direction	G134#0 to #3	–	○
–OT1 to –OT8	Stroke limit reached signals	F126	–	○
ABTQSV	Servo axis abnormal load detected signal	F090#0	○	○
ABTSP1	First–spindle abnormal load detected signal	F090#1	○	○
ABTSP2	Second–spindle abnormal load detected signal	F090#2	○	○
ABTSP3	Third–spindle abnormal load detected signal	F090#3	○	○
AFL	Miscellaneous function lock signal	G005#6	○	○
AICC	AI contour control, AI nano contour control, or AI advanced control mode signal	F062#0	–	○
AL	Alarm signal	F001#0	○	○
ALMA	Alarm signal (serial spindle)	F045#0	○	○
ALMB		F049#0	○	○
ALMC		F168#0	○	○
ALMD		F266#1	○	○
ALNGH	Tool axis direction handle feed mode signal	G023#7	–	○
AR0 to AR15	Actual spindle speed signal	F040,F041	○	–

Symbol	Signal name	Address	T series	M series
ARSTA	Alarm reset signal (serial spindle)	G071#0	○	○
ARSTB		G075#0	○	○
ARSTC		G205#0	○	○
ARSTD		G267#0	○	○
B00 to B31	2nd auxiliary function code signal	F030 to F033	○	○
BAL	Battery alarm signal	F001#2	○	○
BCLP	B–axis clamp signal	F061#1	–	○
BDT1,BDT2 to BDT9	Optional block skip signal	G044#0,G045	○	○
BDTO	Software operator's panel signal(BDT)	F075#2	○	○
BF	2nd auxiliary function strobe signal	F007#4	○	–
BF		F007#7	–	○
BFIN	2nd auxiliary function completion signal	G005#4	○	–
BFIN		G005#7	–	○
BGEACT	Background busy signal	F053#4	○	○
BGEN	Power Mate background busy signal	G092#4	○	○
BGIALM	Power Mate read/write alarm signal	G092#3	○	○
BGION	Power Mate read/write inprogress signal	G092#2	○	○
BUCLP	B–axis unclamp signal	F061#0	–	○
CDZ	Chamferring signal	G053#7	○	–
CFINA	Spindle switch completion signal (serial spindle)	F046#1	○	○
CFINB		F050#1	○	○
CFINC		F169#1	○	○
CFIND		F267#1	○	○
CHPA	Power line switch signal (serial spindle)	F046#0	○	○
CHPB		F050#0	○	○
CHPC		F169#0	○	○
CHPD		F267#0	○	○
CHPCYL	Chopping cycle signal	F039#3	–	○
CHPMD	Chopping–in–progresssignal	F039#2	–	○
CHPST	Chopping start signal	G051#6	–	○
CLRCH1 to CLRCH8	Torque limit reach signals for butt–type reference position setting	F180	○	○
CON	Cs contour control change signal	G027#7	○	○
COSP	Spindle command signal	F064#5	●	–
CSS	Constant surface speed signal	F002#2	○	○
CTH1A,CTH2A	Clutch/gear signal (serial spindle)	G070#3,#2	○	○
CTH1B,CTH2B		G074#3,#2	○	○
CTH1C,CTH2C		G204#3,#2	○	○
CTH1D,CTH2D		G266#3,#2	○	○
CUT	Cutting feed signal	F002#6	○	○

Symbol	Signal name	Address	T series	M series
DEFMDA	Differential mode command signal (serial spindle)	G072#3	○	○
DEFMDB		G076#3	○	○
DEFMDC		G206#3	○	○
DEFMDD		G268#3	○	○
DEN	Distribution end signal	F001#3	○	○
DM00	Decode M signal	F009#7	○	○
DM01		F009#6	○	○
DM02		F009#5	○	○
DM30		F009#4	○	○
DMMC	Direct operation select signal	G042#7	○	○
DNCI	DNC operation select signal	G043#5	○	○
DRN	Dry run signal	G046#7	○	○
DRNE	Dry run signal (PMC axis control)	G150#7	○	○
DRNO	Software operator's panel signal(DRN)	F075#5	○	○
DSCNA	Disconnection detection disbale signal (serial spindle)	G073#4	○	○
DSCNB		G077#4	○	○
DSCNC		G207#4	○	○
DSCND		G269#4	○	○
DSP1, DSP2, DSP3	Spindle motor speed detection signals	Y(n+1)#0 to #2	○	○
DSV1 to DSV8	Servo motor speed detection signals	Y(n+0)	○	○
DTCH1 to DTCH8	Controlled axis detach signal	G124	○	○
EA0 to EA6	Address signal for external data input	G002#0 to #6	○	○
EABUFA	Buffer full signal (PMC axis control)	F131#1	○	○
EABUFB		F134#1	○	○
EABUFC		F137#1	○	○
EABUFD		F140#1	○	○
EACNT1 to EACNT8	Controlling signal (PMC axis control)	F182	○	○
EADEN1 to EADEN8	Distribution completion signal(PMC axis control)	F112	○	○
EAX1 to EAX8	Control axis select signal (PMC axis control)	G136	○	○
EASIP1 to EASIP8	Axis control superimposed command signal	G200	○	○
EBSYA	Axis control command read completion signal (PMC axis control)	F130#7	○	○
EBSYB		F133#7	○	○
EBSYC		F136#7	○	○
EBSYD		F139#7	○	○
EBUFA	Axis control command read signal(PMC axis control)	G142#7	○	○
EBUFB		G154#7	○	○
EBUFC		G166#7	○	○
EBUFD		G178#7	○	○

Symbol	Signal name	Address	T series	M series
EC0A to EC6A	Axis control command signal (PMC axis control)	G143#0 to #6	○	○
EC0B to EC6B		G155#0 to #6	○	○
EC0C to EC6C		G167#0 to #6	○	○
EC0D to EC6D		G179#0 to #6	○	○
ECKZA	Following zero checking signal (PMC axis control)	F130#1	○	○
ECKZB		F133#1	○	○
ECKZC		F136#1	○	○
ECKZD		F139#1	○	○
ECLRA	Reset signal (PMC axis control)	G142#6	○	○
ECLRB		G154#6	○	○
ECLRC		G166#6	○	○
ECLRD		G178#6	○	○
ED0 to ED15	Data signal for external data input	G000,G001	○	○
EDENA	Auxiliary function executing signal (PMC axis control)	F130#3	○	○
EDENB		F133#3	○	○
EDENC		F136#3	○	○
EDEND		F139#3	○	○
EDGN	Slave diagnosis selection signal	F177#7	○	○
EF	External operation signal	F008#0	–	○
EFD	External operation signal for high–speed interface	F007#1	–	○
EFIN	External operation function completion signal	G005#1	–	○
EFINA	Auxiliary function completion signal (PMC axis control)	G142#0	○	○
EFINB		G154#0	○	○
EFINC		G166#0	○	○
EFIND		G178#0	○	○
EGBM1 to EGBM8	EGB mode confirmation signal	F208	–	○
EGENA	Axis moving signal (PMC axis control)	F130#4	○	○
EGENB		F133#4	○	○
EGENC		F136#4	○	○
EGEND		F139#4	○	○
EIALA	Alarm signal (PMC axis control)	F130#2	○	○
EIALB		F133#2	○	○
EIALC		F136#2	○	○
EIALD		F139#2	○	○
EID0A to EID31A	Axis control data signal (PMC axis control)	G146 to G149	○	○
EID0B to EID31B		G158 to G161	○	○
EID0C to EID31C		G170 to G173	○	○
EID0D to EID31D		G182 to G185	○	○

Symbol	Signal name	Address	T series	M series
EIF0A to EIF15A	Axis control feedrate signal (PMC axis control)	G144,G145	○	○
EIF0B to EIF15B		G156,G157	○	○
EIF0C to EIF15C		G168,G169	○	○
EIF0D to EIF15D		G180,G181	○	○
EINPA	In−position signal (PMC axis control)	F130#0	○	○
EINPB		F133#0	○	○
EINPC		F136#0	○	○
EINPD		F139#0	○	○
EKC0 to EKC7	Key code signal	G098	○	○
EKENB	Key code read completion signal	F053#7	○	○
EKSET	key code read signal	G066#7	○	○
ELCKZA	Accumulated zero check signal	G142#1	○	○
ELCKZB		G154#1	○	○
ELCKZC		G166#1	○	○
ELCKZD		G178#1	○	○
EM11A to EM48A	Auxiliary function code signal (PMC axis control)	F132,F142	○	○
EM11B to EM48B		F135,F145	○	○
EM11C to EM48C		F138,F148	○	○
EM11D to EM48D		F141,F151	○	○
EMBUFA	Buffering disable signal (PMC axis control)	G142#2	○	○
EMBUFB		G154#2	○	○
EMBUFC		G166#2	○	○
EMBUFD		G178#2	○	○
EMFA	Auxiliary function strobe signal (PMC axis control)	F131#0	○	○
EMFB		F134#0	○	○
EMFC		F137#0	○	○
EMFD		F140#0	○	○
EMSBKA	Block stop disable signal (PMC axis control)	G143#7	○	○
EMSBKB		G155#7	○	○
EMSBKC		G167#7	○	○
EMSBKD		G179#7	○	○
ENB	Spindle enable signal	F001#4	○	○
ENB2		F038#2	○	–
ENB3		F038#3	○	–
ENB4		F039#1	○	–
ENBKY	External key input mode selection signal	G066#1	○	○

Symbol	Signal name	Address	T series	M series
EOTNA	Negative−direction overtravel signal (PMC axis control)	F130#6	○	○
EOTNB		F133#6	○	○
EOTNC		F136#6	○	○
EOTND		F139#6	○	○
EOTPA	Positive−direction overtravel signal (PMC axis control)	F130#5	○	○
EOTPB		F133#5	○	○
EOTPC		F136#5	○	○
EOTPD		F139#5	○	○
EOV0	Override 0% signal (PMC axis control)	F129#5	○	○
EPARM	Slave parameter selection signal	F177#6	○	○
EPN0 to EPN13	Expanded workpiece number search signals	G024#0 to G025#5	○	○
EPNS	Expanded workpiece number search start signal	G025#7	○	○
EPRG	Slave program selection signal	F177#4	○	○
ERDIO	Slave external read start signal	F177#1	○	○
EREND	Read completion signal for external data input	F060#0	○	○
ERS	External reset signal	G008#7	○	○
ESBKA	Block stop signal (PMC axis control)	G142#3	○	○
ESBKB		G154#3	○	○
ESBKC		G166#3	○	○
ESBKD		G178#3	○	○
ESEND	Search completion signal for external data input	F060#1	○	○
ESKIP	Skip signal (PMC axis control)	X004#6	○	○
ESOFA	Servo off signal (PMC axis control)	G142#4	○	○
ESOFB		G154#4	○	○
ESOFC		G166#4	○	○
ESOFD		G178#4	○	○
ESRSYC	Simple spindle synchronous control signal	G064#6	○	○
ESTB	Read signal for external data input	G002#7	○	○
ESCAN	Search cancel signal for external data input	F060#2	○	○
ESTPA	Axis control temporary stop signal (PMC axis control)	G142#5	○	○
ESTPB		G154#5	○	○
ESTPC		G166#5	○	○
ESTPD		G178#5	○	○
ESTPIO	Slave read/write stop signal	F177#2	○	○
EVAR	Slave macro variable selection signal	F177#5	○	○
EWTIO	Slave external write start signal	F177#3	○	○
EXHPCC	HPCC operation signal	F066#7	–	○
EXLM	Stored stroke limit select signal	G007#6	○	○

Symbol	Signal name	Address	T series	M series
EXOFA	Motor activation off status signal (serial spindle)	F047#4	○	○
EXOFB		F051#4	○	○
EXOFC		F170#4	○	○
EXOFD		F268#4	○	○
EXRD	External read start signal	G058#1	○	○
EXSTP	External read/punch stop signal	G058#2	○	○
EXWT	External punch start signal	G058#3	○	○
F1D	F1–digit feed select signal	G016#7	–	○
FIN	Completion signal	G004#3	○	○
FRP1 to FRP8	Floating reference position return end signal	F116	○	○
FSCSL	Cs contour control change completion signal	F044#1	○	○
FSPPH	Spindle phase synchronous control completion signal	F044#3	○	○
FSPSY	Spindle synchronous speed control completion signal	F044#2	○	○
FTCAL	Statistical calculation start signal	G203#1	○	○
FTCLR	Store counter clear signal	G203#2	○	○
FTCMD	Torque sensing command signal	G203#0	○	○
G08MD	Advanced preview control mode signal	F066#0	–	○
G2RVX	Tool offset direction signal	G090#0	○	–
G2RVY		G090#2	○	–
G2RVZ		G090#1	○	–
G2SLC	Second figure tool offset signal	G090#7	○	–
G2X	Second figure tool offset axis select signal	G090#4	○	–
G2Y		G090#6	○	–
G2Z		G090#5	○	–
GOQSM	Tool offset value write mode select signal	G039#7	○	–
GR1,GR2	Gear selection signal (input)	G028#1,#2	○	○
GR1O,GR2O,GR3O	Gear selection signal (output)	F034#0 to #2	–	○
GR21	Gear selection signal (input)	G029#0	○	○
GR31		G029#2	○	○
GR41		G031#4	○	○
HCAB2	Hard copy stop request acceptance flag	F061#2	○	○
HCABT	Hard copy stop request signal	G067#6	○	○
HCEXE	Hard copy in–progress signal	F061#3	○	○
HCREQ	Hard copy request signal	G067#7	○	○
HCSKP1 to HCSKP4	Skip signals for high–speed cycle machining	G065#4 to 7	○	○
HDO0 to HDO7	High–speed skip status signal	F122	○	○
HEAD	Path selection signal (Tool post selection signal)	G063#0	●	●
HOBCAN	Cancel–sync–with–C–axissignal	G066#2	○	○
HOBSYN	Sync–with–C–axissignal	F065#7	○	○

Symbol	Signal name	Address	T series	M series
HROV	1% step rapid traverse override select signal	G096#7	○	○
HS1A to HS1D	Manual handle feed axis selection signal	G018#0 to #3	○	○
HS1AO	Software operator's panel signal(HS1A)	F077#0	○	○
HS1BO	Software operator's panel signal(HS1B)	F077#1	○	○
HS1CO	Software operator's panel signal(HS1C)	F077#2	○	○
HS1DO	Software operator's panel signal(HS1D)	F077#3	○	○
HS1IA to HS1ID	Manual handle interruption axis select signal	G041#0 to #3	○	○
HS2A to HS2D	Manual handle feed axis selection signal	G018#4 to #7	○	○
HS2IA to HS2ID	Manual handle interruption axis select signal	G041#4 to #7	○	○
HS3A to HS3D	Manual handle feed axis selection signal	G019#0 to #3	○	○
HS3IA to HS3ID	Manual handle interruption axis select signal	G042#0 to #3	○	○
IGNVRY	All−axis VRDY OFF alarm ignore signal	G066#0	○	○
IGVRY1 to IGVRY8	Each−axis VRDY OFF alarm ignore signal	G192	○	○
INCH	Inch input signal	F002#0	○	○
INCMDA	Incremental command external setting type orientation signal (serial spindle)	G072#5	○	○
INCMDB		G076#5	○	○
INCMDC		G206#5	○	○
INCMDD		G268#5	○	○
INCSTA	Incremental method orientation signal (serial spindle)	F047#1	○	○
INCSTB		F051#1	○	○
INCSTC		F170#1	○	○
INCSTD		F268#1	○	○
INDXA	Orientation stop position change signal (serial spindle)	G072#0	○	○
INDXB		G076#0	○	○
INDXC		G206#0	○	○
INDXD		G268#0	○	○
INHKY	Key input disable signal	F053#0	○	○
INP1 to INP8	In−position signal	F104	○	○
INTGA	Signal for controlling velocity integration (serial spindle)	G071#5	○	○
INTGB		G075#5	○	○
INTGC		G205#5	○	○
INTGD		G267#5	○	○
IOLACK	I/O Link confirmation signal	G092#0	○	○
IOLBH2	Manual handle feed generator selection signals	G199#0	○	○
IOLBH3		G199#1	○	○
IOLNK	Slave I/O Link selection signal	F177#0	○	○
IOLS	I/O Link specification signal	G092#1	○	○
ITCD	Rotation area interference check disable signal	G292#7	○	○
IUDD1 to IUDD8	Abnormal load detection ignore signal	G125	○	○

Symbol	Signal name	Address	T series	M series
KEY1 to KEY4	Memory protect signal	G046#3 to #6	○	○
KEYO	Software operator's panel signal(KEY1 to KEY4)	F075#6	○	○
LDT1A	Load detection signal 1 (serial spindle)	F045#4	○	○
LDT1B		F049#4	○	○
LDT1C		F168#4	○	○
LDT1D		F266#4	○	○
LDT2A	Load detection signal 2 (serial spindle)	F045#5	○	○
LDT2B		F049#5	○	○
LDT2C		F168#5	○	○
LDT2D		F266#5	○	○
M00 to M31	Miscellaneous function code signal	F010 to F013	○	○
M200 to M215	2nd M function code signal	F014 to F015	○	○
M300 to M315	3rd M function code signal	F016 to F017	○	○
MA	CNC ready signal	F001#7	○	○
MABSM	Manual absolute check signal	F004#2	○	○
MAFL	Miscellaneous function lock check signal	F004#4	○	○
MBDT1,MBDT2 to MBDT9	Optional block skip check signal	F004#0,F005	○	○
MCFNA	Power line switch completion signal (serial spindle)	G071#3	○	○
MCFNB		G075#3	○	○
MCFNC		G205#3	○	○
MCFND		G267#3	○	○
MCHK	Check mode handle valid signal	G067#3	○	–
MD1,MD2,MD4	Mode selection signal	G043#0 to #2	○	○
MD1O	Software operator's panel signal(MD1)	F073#0	○	○
MD2O	Software operator's panel signal(MD2)	F073#1	○	○
MD4O	Software operator's panel signal(MD4)	F073#2	○	○
MDRN	Dry run check signal	F002#7	○	○
MDTCH1 to MDTCH8	Controlled axis detach status signal	F110	○	○
MEDT	Memory edit select check signal	F003#6	○	○
MF	Auxiliary function strobe signal	F007#0	○	○
MF2	2nd M function strobe signal	F008#4	○	○
MF3	3rd M function strobe signal	F008#5	○	○
MFIN	Auxiliary function completion signal	G005#0	○	○
MFIN2	2nd M function completion signal	G004#4	○	○
MFIN3	3rd M function completion signal	G004#5	○	○
MFNHGA	Main spindle MCC status signal while changing spindles signal (serial spindle)	G072#6	○	○
MFNHGB		G076#6	○	○
MFNHGC		G206#6	○	○
MFNHGD		G268#6	○	○

Symbol	Signal name	Address	T series	M series
MFSYNA to MFSYND	Flexible synchronization control mode select signal switching accepted signals	F197#0 to #3	–	○
MH	Manual handle feed select check signal	F003#1	○	○
MHPCC	HPCC mode signal	F066#6	–	○
MI1 to MI8	Mirror image signal	G106	○	○
MINC	Incremental feed select check signal	F003#0	○	○
MINP	External program input start signal	G058#0	○	○
MIX1 to MIX7	Composite control axis selection signals	G128#0 to #6	●	–
MJ	JOG feed select check signal	F003#2	○	○
MLK	All−axis machine lock signal	G044#1	○	○
MLK1 to MLK8	Each−axis machine lock signal	G108	○	○
MLKO	Software operator's panel signal(MLK)	F075#4	○	○
MMDI	Manual data input select check signal	F003#3	○	○
MMEM	Automatic operation select check signal	F003#5	○	○
MMI1 to MMI8	Mirror image check signal	F108	○	○
MMLK	All−axis machine lock check signal	F004#1	○	○
MMOD	Check mode signal	G067#2	○	–
MNCHG	Inversion inhibition signal	F091#1	○	–
MORA1A	Signal for completion of spindle orientation with a magnetic sensor (serial spindle)	F046#6	○	○
MORA1B		F050#6	○	○
MORA1C		F169#6	○	○
MORA1D		F267#6	○	○
MORA2A	Signal for approximate spindle orientation with a magnetic sensor (serial spindle)	F046#7	○	○
MORA2B		F050#7	○	○
MORA2C		F169#7	○	○
MORA2D		F267#7	○	○
MORCMA	Command for spindle orientaion with a magnetic sensor (serial spindle)	G073#0	○	○
MORCMB		G077#0	○	○
MORCMC		G207#0	○	○
MORCMD		G269#0	○	○
MP1,MP2	Manual handle feed amount selection signal (incremental feed signal)	G019#4,#5	○	○
MP1O	Software operator's panel signal(MP1)	F076#0	○	○
MP2O	Software operator's panel signal(MP2)	F076#1	○	○
MPOFA	Motor power stop signal (serial spindle)	G073#2	○	○
MPOFB		G077#2	○	○
MPOFC		G207#2	○	○
MPOFD		G269#2	○	○

Symbol	Signal name	Address	T series	M series
MRDYA	Machine ready signal (serial spindle)	G070#7	○	○
MRDYB		G074#7	○	○
MRDYC		G204#7	○	○
MRDYD		G266#7	○	○
MREF	Manual reference position return selection check signal	F004#5	○	○
MRMT	DNC operation select check signal	F003#4	○	○
MRVM	Check mode backward movement inhibition signal	G067#1	○	–
MRVMD	Check mode backward movement signal	F091#0	○	–
MRVSP	Backward movement inhibition signal	F091#2	○	–
MSBK	Single block check signal	F004#3	○	○
MSDFON	Motor speed detection function enable signal	G016#0	○	○
MSPC	One–rotation position manual set signal	G066#5	○	○
MSPCF	One–rotation position setting completed signal	F065#5	○	○
MTA to MTD	Flexible synchronization control mode select signals	G197#0 to #3	–	○
MTCHIN	TEACH IN select check signal	F003#7	○	○
MV1 to MV8	Axis moving signal	F102	○	○
MVD1 to MVD8	Axis moving direction signal	F106	○	○
NOWT	No–wait signal	G063#1	●	●
NOZAGC	Perpendicular/angular axis control disable signal	G063#5	○	○
NPOS1 to NPOS8	Position display neglect signal	G198	○	○
NRROA	Short–distant movement command while changing the orientation stop position signal (serial spindle)	G072#2	○	○
NRROB		G076#2	○	○
NRROC		G206#2	○	○
NRROD		G268#2	○	○
OFN0 to OFN5,OFN6	Tool offset number select signal	G039#0 to #5,G040#0	○	–
OP	Automatic operation signal	F000#7	○	○
ORARA	Orientation completion signal (serial spindle)	F045#7	○	○
ORARB		F049#7	○	○
ORARC		F168#7	○	○
ORARD		F266#7	○	○
ORCMA	Orientation command signal (serial spindle)	G070#6	○	○
ORCMB		G074#6	○	○
ORCMC		G204#6	○	○
ORCMD		G266#6	○	○
OUT0 to OUT7	Software operator's panel general–purpose switch signal	F072	○	○
OVC	Override cancel signal	G006#4	○	○
OVCE	Override cancellation signal (PMC axis control)	G150#5	○	○
OVLS1 to OVLS7	Superimposed control axis selection signals	G190#0 to #6	●	–

Symbol	Signal name	Address	T series	M series
OVRA	Analog override command signal (serial spindle)	G072#4	○	○
OVRB		G076#4	○	○
OVRC		G206#4	○	○
OVRD		G268#4	○	○
PBATL	Absolute position detector battery voltage low alarm signal	F172#7	○	○
PBATZ	Absolute position detector battery voltage zero alarm signal	F172#6	○	○
PC1DEA	Signal indicating the status of the detected one–rotation position coder signal (serial spindle)	F047#0	○	○
PC1DEB		F051#0	○	○
PC1DEC		F170#0	○	○
PC1DED		F268#0	○	○
PC2SLC	2nd position coder selection signal	G028#7	○	–
PC3SLC	3rd position coder selection signal	G026#0	○	○
PC4SLC	4th position coder selection signal	G026#1	○	○
PDT1	Conversation mode selection signal	G062#4	○	–
PDT2	Restart operation notification signal	G062#5	○	–
PECK2	Small–diameter peck drilling in progress signal	F066#5	–	○
PK1 to PK8	Parking signals	G122	○	–
PK1 to PK7	Parking signals	G122#0 to #6	●	–
PKESS1	First spindle synchronous control signal	G122#6 (G031#6)	○	○
PKESS2	Second spindle synchronous control signal	G122#7 (G031#7)	○	○
PN1,PN2,PN4,PN8, PN16	Workpiece number search signal	G009#0 to 4	○	○
PORA2A	Signal for approximate spindle orientation with a position coder (serial spindle)	F046#5	○	○
PORA2B		F050#5	○	○
PORA2C		F169#5	○	○
PORA2D		F267#5	○	○
PRC	Position record signal	G040#6	○	–
PRGDPL	program screen display mode signal	F053#1	○	○
PRTSF	Target parts count reached signal	F062#7	○	○
PSAR	Spindle polygon speed arrival signal	F063#2	○	–
PSE1	Master axis not arrival signal	F063#0	○	–
PSE2	Polygon synchronous axis not arrival signal	F063#1	○	–
PSW01 to PSW16	Position switch signal	F070#0 to F071#7	○	○
PSYN	Polygon synchronization under way signal	F063#7	○	–
R01I to R12I	Spindle motor speed command signal	G032#0 to G033#3	○	○
R01I2 to R12I2		G034#0 to G035#3	○	○
R01I3 to R12I3		G036#0 to G037#3	○	○
R01I4 to R12I4		G272#0 to G273#3	○	○
R01O to R12O	S12–bit code signal	F036#0 to F037#3	○	○

Symbol	Signal name	Address	T series	M series
RCFNA	Output switch completion signal (serial spindle)	F046#3	○	○
RCFNB		F050#3	○	○
RCFNC		F169#3	○	○
RCFND		F1267#3	○	○
RCHA	Power line status check signal (serial spindle)	G071#7	○	○
RCHB		G075#7	○	○
RCHC		G205#7	○	○
RCHD		G267#7	○	○
RCHHGA	High–output MCC status signal while a magnetic sensor (serial spindle)	G072#7	○	○
RCHHGB		G076#7	○	○
RCHHGC		G206#7	○	○
RCHHGD		G268#7	○	○
RCHPA	Output switch signal (serial spindle)	F046#2	○	○
RCHPB		F050#2	○	○
RCHPC		F169#2	○	○
RCHPD		F267#2	○	○
RGHTH	Tool axis perpendicular direction handle feed mode signal	G023#6	–	○
RGSPM	Spindle rotation direction signal	F065#1	–	○
RGSPP		F065#0	–	○
RGTAP	Rigid tapping signal	G061#0	○	○
RGTSP1,RGTSP2	Rigid tapping spindle selection signal	G061#4,#5	○	–
RLSOT	Stroke check release signal	F007#7	–	○
RLSOT3	Stroke check 3 release signal	G007#4	○	○
RMTDI0 to RMTDI7	Input signal for remote buffer	G052	○	○
RMTDO0 to RMTDO7	Output signal for remote buffer	F069	○	○
ROTAA	Rotation direction command while changing the orientation stop position signal (serial spindle)	G072#1	○	○
ROTAB		G076#1	○	○
ROTAC		G206#1	○	○
ROTAD		G268#1	○	○
ROV1,ROV2	Rapid traverse override signal	G014#0,#1	○	○
ROV1E,ROV2E	Rapid traverse override signal(PMC axis control)	G150#0,#1	○	○
ROV1O	Software operator's panel signal(ROV1)	F076#4	○	○
ROV2O	Software operator's panel signal(ROV2)	F076#5	○	○
RPALM	Read/punch alarm signal	F053#3	○	○
RPBSY	Read/punch in–progress signal	F053#2	○	○
RPDO	Rapid traversing signal	F002#1	○	○
RRW	Reset&rewind signal	G008#6	○	○

Symbol	Signal name	Address	T series	M series
RSLA	Output switch request signal (serial spindle)	G071#6	○	○
RSLB		G075#6	○	○
RSLC		G205#6	○	○
RSLD		G267#6	○	○
RST	Reset signal	F001#1	○	○
RT	Manual rapid traverse selection signal	G019#7	○	○
RTAP	Rigid tapping in–progress signal	F076#3	○	○
RTE	Manual rapid traverse selection signal (PMC axis control)	G150#6	○	○
RTO	Software operator's panel signal(RT)	F077#6	○	○
RTNT	Rigid tapping retraction start signal	G062#6	–	○
RTPT	Rigid tapping retraction completiont signal	F066#1	–	○
RTRCT	Retract signal	G066#4	○	○
RTRCTF	Retract completion signal	F065#4	○	○
RVS	Retrace signal	G007#0	–	○
RVSL	Retrace–in–progress signal	F082#2	–	○
RWD	Rewinding signal	F000#0	○	○
S00 to S31	Spindle speed code signal	F022 to F025	○	○
S1MES	Spindle 1 under measurement signal	F062#3	○	–
S2MES	Spindle 2 under measurement signal	F062#4	○	–
S2TLS	Spindle measurement select signal	G040#5	○	–
SA	Servo ready signal	F000#6	○	○
SAR	Spindle speed arrival signal	G029#4	○	○
SARA	Speed arrival signal (serial spindle)	F045#3	○	○
SARB		F049#3	○	○
SARC		F168#3	○	○
SARD		F266#3	○	○
SBK	Single block signal	G046#1	○	○
SBKO	Software operator's panel signal(SBK)	F075#3	○	○
SCLP	Spindle clamp signal	F038#0	○	–
SDTA	Speed detection signal (serial spindle)	F045#2	○	○
SDTB		F049#2	○	○
SDTC		F168#2	○	○
SDTD		F266#2	○	○
SF	Spindle speed strobe signal	F007#2	○	○
SFIN	Spindle function completion signal	G005#2	○	○
SFRA	CW command signal (serial spindle)	G070#5	○	○
SFRB		G074#5	○	○
SFRC		G204#5	○	○
SFRD		G266#5	○	○

Symbol	Signal name	Address	T series	M series
SGN	Spindle motor command polarity select signal	G033#5	○	○
SGN2		G035#5	○	○
SGN3		G037#5	○	○
SGN4		G273#5	○	○
SHA00 to SHA11	Spindle orientation external stop position command signal	G078#0 to G079#3	○	○
SHB00 to SHB11		G080#0 to G081#3	○	○
SHC00 to SHC11		G208#0 to G209#3	○	○
SHD00 to SHD11		G270#0 to G271#3	○	○
SIND	Spindle motor speed command select signal	G033#7	○	○
SIND2		G035#7	○	○
SIND3		G037#7	○	○
SIND4		G273#7	○	○
SKIP	Skip signal	X004#7	○	○
	Overload torque signal	X004#7	–	○
SKIP2 to SKIP6, SKIP7,SKIP8	Skip signal	X004#2 to #6, #0,#1	○	○
SKIPP	Skip signal	G006#6	○	–
SLPCA,SLPCB	Spindle return select signal	G064#2,#3	●	–
SLSPA,SLSPB	Spindle command select signal	G063#2,#3	●	–
SLVA	Slave operation command signal (serial spindle)	G073#1	○	○
SLVB		G077#1	○	○
SLVC		G207#1	○	○
SLVD		G269#1	○	○
SLVSA	Slave operation status signal (serial spindle)	F046#4	○	○
SLVSB		F050#4	○	○
SLVSC		F169#4	○	○
SLVSD		F267#4	○	○
SMZ	Error detect signal	G053#6	○	–
SOCNA	Soft start/stop cancel signal (serial spindle)	G071#4	○	○
SOCNB		G075#4	○	○
SOCNC		G205#4	○	○
SOCND		G267#4	○	○
SOR	Spindle orientation signal	G029#5	○	○
SOV0 to SOV7	Spindle speed override signal	G030	○	○
SPAL	Spindle fluctuation detection alarm signal	F035#0	○	○
SPL	Feed hold lamp signal	F000#4	○	○
SPO	Software operator's panel signal(*SP)	F075#7	○	○
SPPHS	Spindle phase synchronous control signal	G038#3	○	○

Symbol	Signal name	Address	T series	M series
SPSLA	Spindle select signal (serial spindle)	G071#2	○	○
SPSLB		G075#2	○	○
SPSLC		G205#2	○	○
SPSLD		G267#2	○	○
SPSTP	Spindle stop complete signal	G028#6	○	–
SPSYC	Spindle synchronous control signal	G038#2	○	○
SPWRN1 to SPWRN9	Spindle warning detail signals	F264#0 to F265#0	○	○
SRLNI0 to SRLNI3	Group number specification signals	G091#0 to #3	○	○
SRLNO0 to SRLNO3	Group number output signals	F178#0 to #3	○	○
SRN	Program restart signal	G006#0	○	○
SRNMV	Program restart under way signal	F002#4	○	○
SRVA	CCW command signal (serial spindle)	G070#4	○	○
SRVB		G074#4	○	○
SRVC		G204#4	○	○
SRVD		G266#4	○	○
SSIN	Spindle motor command polarity select signal	G033#6	○	○
SSIN2		G035#6	○	○
SSIN3		G037#6	○	○
SSIN4		G273#6	○	○
SSTA	Speed zero signal (serial spindle)	F045#1	○	○
SSTB		F049#1	○	○
SSTC		F168#1	○	○
SSTD		F266#1	○	○
ST	Cycle start lamp signal	G007#2	○	○
STL	Cycle start signal	F000#5	○	○
STLK	Start lock signal	G007#1	○	–
STRD	Input and run simultaneous mode select signal	G058#5	–	○
STWD	Output and run simultaneous mode select signal	G058#6	–	○
SUCLP	Spindle unclamp signal	F038#1	○	–
SVF1 to SVF8	Servo off signal	G126	○	○
SWS1	Spindle selection signals	G027#0	○	○
SWS2		G027#1	○	○
SWS3		G027#2	○	○
SWS4		G026#3	○	○
SYCAL	Phase error monitor signal	F044#4	○	○
SYN1O to SYN8O	Synchronous control under way signals	F118	○	–
SYN1O to SYN7O	Synchronous/composite/superimposed control under way signals	F118#0 to #6	●	–
SYNC1 to SYNC8	Simple synchronous axis select signal	G138	○	○

Symbol	Signal name	Address	T series	M series
SYNC to SYNC8	Synchronous control axis selection signals	G138	○	–
SYNC to SYNC7		G138#0 to #6	●	–
SYNCJ1 to SYNCJ8	Simple synchronous manual feed axis select signal	G140	–	○
SYNMOD	EGB mode signal	F065#6		○
T00 to T31	Tool function code signal	F026 to F029	○	○
TAP	Tapping signal	F001#5	○	○
TF	Tool function strobe signal	F007#3	○	○
TFIN	Tool function completion signal	G005#3	○	○
THRD	Thread cutting signal	F002#3	○	○
TIALM	Tool post interference alarm signal	F064#7	●	–
TICHK	Tool post interference check signal	F064#6	●	–
TL01 to TL64	Tool group number select signal	G047#0 to #6	○	–
TL01 to TL256		G047#0 to G048#0	–	○
TLCH	Tool change signal	F064#0	○	○
TLCHB	Tool life arrival notice signal	F064#3	–	○
TLCHI	Individual tool change signal	F064#2	–	○
TLMA	Torque limit signal (serial spindle)	F045#6	○	○
TLMB		F049#6	○	○
TLMC		F168#6	○	○
TLMD		F266#6	○	○
TLMHA	Torque limit command HIGH signal (serial spindle)	G070#1	○	○
TLMHB		G074#1	○	○
TLMHC		G204#1	○	○
TLMHD		G266#1	○	○
TLMLA	Torque limit command LOW signal (serial spindle)	G070#0	○	○
TLMLB		G074#0	○	○
TLMLC		G204#0	○	○
TLMLD		G266#0	○	○
TLNW	New tool select signal	F064#1	○	○
TLRST	Tool change reset signal	G048#7	○	○
TLRSTI	Individual tool change reset signal	G048#6	–	○
TLSKP	Tool skip signal	G048#5	○	○
TMRON	General–purpose integrating meter start signal	G053#0	○	○
TRACT	Tool retraction mode signal	F092#3	○	○
TRESC	Tool retraction signal	G059#0	○	○
TRQL1 to TRQL8	Torque limit reached signal	F114	○	–
TRRTN	Tool return signal	G059#1	○	○
TRSPS	Tool return completion signal	F092#5	○	○
UI000 to UI015	Input signal for custom macro	G054,G055	○	○

Symbol	Signal name	Address	T series	M series
UINT	Interrupt signal for custom macro	G053#3	○	○
UO000 to UO015	Output signal for custom macro	F054,F055	○	○
UO100 to UO131		F056 to F059	○	○
WATO	Waiting signal	F063#6	●	●
WOQSM	Workpiece coordinate system shift value write mode select signal	G039#6	○	–
WOSET	Workpiece coordinate system shift value write signal	G040#7	○	–
XAE	Measuring position reached signal	X004#0	○	○
YAE		X004#1	–	○
ZAE		X004#1	○	–
ZAE		X004#2	–	○
ZP1 to ZP8	Reference position return end signal	F094	○	○
ZP21 to ZP28	2nd reference position return end signal	F096	○	○
ZP31 to ZP38	3rd reference position return end signal	F098	○	○
ZP41 to ZP48	4th reference position return end signal	F100	○	○
ZRF1 to ZRF8	Reference position establishment signal	F120	○	○
ZRN	Manual reference position return selection signal	G043#7	○	○
ZRNO	Software operator's panel signal(ZRN)	F073#4	○	○

7.6 LIST OF ADDRESSES

- **Address list (1–path control)**

For a signal that is common to the M series and T series, and is usable for only one of the two series, hatching is provided on the upper part (the T series) or lower part (M series) for which the signal is not usable, as shown below.

[Example 1] EXLM and ST are signals common to the T series and M series. STLK is a signal usable only for the T series. RLSOT and RVS are signals usable only for the M series.

	#7	#6		#2	#1	#0	
G007	RLSOT	EXLM		ST	STLK	RVS	T series M series

MT → PMC

Address	Bit number #7	#6	#5	#4	#3	#2	#1	#0	
X000									
X001									
X002									
X003									
X004	SKIP	ESKIP SKIP6	–MIT2 SKIP5	+MIT2 SKIP4	–MIT1 SKIP3	+MIT1 SKIP2	ZAE SKIP8	XAE SKIP7	(T series)
	SKIP	ESKIP SKIP6	SKIP5	SKIP4	SKIP3	ZAE SKIP2	YAE SKIP8	XAE SKIP7	(M series)
X005									
X006									
X007									
X008				*ESP					
X009	*DEC8	*DEC7	*DEC6	*DEC5	*DEC4	*DEC3	*DEC2	*DEC1	
X010									
X011									
X012									

PMC → CNC

Address	Bit number							
	#7	#6	#5	#4	#3	#2	#1	#0
G000	ED7	ED6	ED5	ED4	ED3	ED2	ED1	ED0
G001	ED15	ED14	ED13	ED12	ED11	ED10	ED9	ED8
G002	ESTB	EA6	EA5	EA4	EA3	EA2	EA1	EA0
G003								
G004			MFIN3	MFIN2	FIN			
G005	BFIN	AFL		BFIN	TFIN	SFIN	EFIN	MFIN
G006		SKIPP		OVC		*ABSM		SRN
G007	RLSOT	EXLM	*FLWU	RLSOT3		ST	STLK	RVS
G008	ERS	RRW	*SP	*ESP	*BSL		*CSL	*IT
G009				PN16	PN8	PN4	PN2	PN1
G010	*JV7	*JV6	*JV5	*JV4	*JV3	*JV2	*JV1	*JV0
G011	*JV15	*JV14	*JV13	*JV12	*JV11	*JV10	*JV9	*JV8
G012	*FV7	*FV6	*FV5	*FV4	*FV3	*FV2	*FV1	*FV0
G013	*AFV7	*AFV6	*AFV5	*AFV4	*AFV3	*AFV2	*AFV1	*AFV0
G014							ROV2	ROV1
G015								
G016	F1D							MSDFON
G017								
G018	HS2D	HS2C	HS2B	HS2A	HS1D	HS1C	HS1B	HS1A
G019	RT		MP2	MP1	HS3D	HS3C	HS3B	HS3A
G020								
G021								
G022								
G023	ALNGH	RGHTH						
G024	EPN7	EPN6	EPN5	EPN4	EPN3	EPN2	EPN1	EPN0

	#7	#6	#5	#4	#3	#2	#1	#0
G025	EPNS		EPN13	EPN12	EPN11	EPN10	EPN9	EPN8
G026		*SSTP4			SWS4		PC4SLC	PC3SLC
G027	CON		*SSTP3	*SSTP2	*SSTP1	SWS3	SWS2	SWS1
G028	PC2SLC	SPSTP	*SCPF	*SUCPF		GR2	GR1	
G029		*SSTP	SOR	SAR		GR31		GR21
G030	SOV7	SOV6	SOV5	SOV4	SOV3	SOV2	SOV1	SOV0
G031	PKESS2	PKESS1		GR41				
G032	R08I	R07I	R06I	R05I	R04I	R03I	R02I	R01I
G033	SIND	SSIN	SGN		R12I	R11I	R10I	R09I
G034	R08I2	R07I2	R06I2	R05I2	R04I2	R03I2	R02I2	R01I2
G035	SIND2	SSIN2	SGN2		R12I2	R11I2	R10I2	R09I2
G036	R08I3	R07I3	R06I3	R05I3	R04I3	R03I3	R02I3	R01I3
G037	SIND3	SSIN3	SGN3		R12I3	R11I3	R10I3	R09I3
G038	*BECLP	*BEUCP			SPPHS	SPSYC		*PLSST
G039	GOQSM	WOQSM	OFN5	OFN4	OFN3	OFN2	OFN1	OFN0
G040	WOSET	PRC	S2TLS					OFN6
G041	HS2ID	HS2IC	HS2IB	HS2IA	HS1ID	HS1IC	HS1IB	HS1IA
G042	DMMC				HS3ID	HS3IC	HS3IB	HS3IA
G043	ZRN		DNCI			MD4	MD2	MD1
G044							MLK	BDT1
G045	BDT9	BDT8	BDT7	BDT6	BDT5	BDT4	BDT3	BDT2
G046	DRN	KEY4	KEY3	KEY2	KEY1		SBK	
G047	TL128	TL64	TL32	TL16	TL08	TL04	TL02	TL01
G048	TLRST	TLRSTI	TLSKP					TL256
G049	*TLV7	*TLV6	*TLV5	*TLV4	*TLV3	*TLV2	*TLV1	*TLV0

	#7	#6	#5	#4	#3	#2	#1	#0
G050							*TLV9	*TLV8
G051	*CHLD	CHPST			*CHP8	*CHP4	*CHP2	*CHP0
G052	RMTDI7	RMTDI6	RMTDI5	RMTDI4	RMTDI3	RMTDI2	RMTDI1	RMTDI0
G053	CDZ	SMZ			UINT			TMRON
G054	UI007	UI006	UI005	UI004	UI003	UI002	UI001	UI000
G055	UI015	UI014	UI013	UI012	UI011	UI010	UI009	UI008
G056								
G057								
G058		STWD	STRD		EXWT	EXSTP	EXRD	MINP
G059							TRRTN	TRESC
G060	*TSB							
G061			RGTSP2	RGTSP1				RGTAP
G062		RTNT	PDT2	PDT1			*CRTOF	
G063			NOZAGC					
G064		ESRSYC						
G065	HCSKP4	HCSKP3	HCSKP2	HCSKP1				
G066	EKSET		MSPC	RTRCT		HOBCAN	ENBKY	IGNVRY
G067					MCHK	MMOD	MRVM	
G068								
G069								
G070	MRDYA	ORCMA	SFRA	SRVA	CTH1A	CTH2A	TLMHA	TLMLA
G071	RCHA	RSLA	INTGA	SOCNA	MCFNA	SPSLA	*ESPA	ARSTA
G072	RCHHGA	MFNHGA	INCMDA	OVRA	DEFMDA	NRROA	ROTAA	INDXA
G073				DSCNA	SORSLA	MPOFA	SLVA	MORCMA
G074	MRDYB	ORCMB	SFRB	SRVB	CTH1B	CTH2B	TLMHB	TLMLB

	#7	#6	#5	#4	#3	#2	#1	#0
G075	RCHB	RSLB	INTGB	SOCNB	MCFNB	SPSLB	*ESPB	ARSTB
G076	RCHHGB	MFNHGB	INCMDB	OVRB	DEFMDB	NRROB	ROTAB	INDXB
G077				DSCNB	SORSLB	MPOFB	SLVB	MORCMB
G078	SHA07	SHA06	SHA05	SHA04	SHA03	SHA02	SHA01	SHA00
G079					SHA11	SHA10	SHA09	SHA08
G080	SHB07	SHB06	SHB05	SHB04	SHB03	SHB02	SHB01	SHB00
G081					SHB11	SHB10	SHB09	SHB08
G082	Reserve for order made macro							
G083	Reserve for order made macro							
G084								
G085								
G086					–Ja	+Ja	–Jg	+Jg
G087								
G088								
G089								
G090	G2SLC	G2Y	G2Z	G2X		G2RVY	G2RVZ	G2RVX
G091					SRLNI3	SRLNI2	SRLNI1	SRLNI0
G092				BGEN	BGIALM	BGION	IOLS	IOLACK
G093								
G094								
G095								
G096	HROV	*HROV6	*HROV5	*HROV4	*HROV3	*HROV2	*HROV1	*HROV0
G097								
G098	EKC7	EKC6	EKC5	EKC4	EKC3	EKC2	EKC1	EKC0
G099								

	#7	#6	#5	#4	#3	#2	#1	#0	
G100	+J8	+J7	+J6	+J5	+J4	+J3	+J2	+J1	
G101									
G102	–J8	–J7	–J6	–J5	–J4	–J3	–J2	–J1	
G103									
G104	+EXL8	+EXL7	+EXL6	+EXL5	+EXL4	+EXL3	+EXL2	+EXL1	
G105	–EXL8	–EXL7	–EXL6	–EXL5	–EXL4	–EXL3	–EXL2	–EXL1	
G106	MI8	MI7	MI6	MI5	MI4	MI3	MI2	MI1	
G107									
G108	MLK8	MLK7	MLK6	MLK5	MLK4	MLK3	MLK2	MLK1	
G109									
G110	+LM8	+LM7	+LM6	+LM5	+LM4	+LM3	+LM2	+LM1	
G111									
G112	–LM8	–LM7	–LM6	–LM5	–LM4	–LM3	–LM2	–LM1	
G113									
G114	*+L8	*+L7	*+L6	*+L5	*+L4	*+L3	*+L2	*+L1	
G115									
G116	*–L8	*–L7	*–L6	*–L5	*–L4	*–L3	*–L2	*–L1	
G117									
G118	*+ED8	*+ED7	*+ED6	*+ED5	*+ED4	*+ED3	*+ED2	*+ED1	
G119									
G120	*–ED8	*–ED7	*–ED6	*–ED5	*–ED4	*–ED3	*–ED2	*–ED1	
G121									
G122	PK8 PKESS2	PK7 PKESS1	PK6	PK5	PK4	PK3	PK2	PK1	(T series)
	PKESS2	PKESS1							(M series)
G123									

	#7	#6	#5	#4	#3	#2	#1	#0
G124	DTCH8	DTCH7	DTCH6	DTCH5	DTCH4	DTCH3	DTCH2	DTCH1
G125	IUDD8	IUDD7	IUDD6	IUDD5	IUDD4	IUDD3	IUDD2	IUDD1
G126	SVF8	SVF7	SVF6	SVF5	SVF4	SVF3	SVF2	SVF1
G127								
G128								
G129								
G130	*IT8	*IT7	*IT6	*IT5	*IT4	*IT3	*IT2	*IT1
G131								
G132					+MIT4	+MIT3	+MIT2	+MIT1
G133								
G134					–MIT4	–MIT3	–MIT2	–MIT1
G135								
G136	EAX8	EAX7	EAX6	EAX5	EAX4	EAX3	EAX2	EAX1
G137								
G138	SYNC8	SYNC7	SYNC6	SYNC5	SYNC4	SYNC3	SYNC2	SYNC1
G139								
G140	SYNCJ8	SYNCJ7	SYNCJ6	SYNCJ5	SYNCJ4	SYNCJ3	SYNCJ2	SYNCJ1
G141								
G142	EBUFA	ECLRA	ESTPA	ESOFA	ESBKA	EMBUFA	ELCKZA	EFINA
G143	EMSBKA	EC6A	EC5A	EC4A	EC3A	EC2A	EC1A	EC0A
G144	EIF7A	EIF6A	EIF5A	EIF4A	EIF3A	EIF2A	EIF1A	EIF0A
G145	EIF15A	EIF14A	EIF13A	EIF12A	EIF11A	EIF10A	EIF9A	EIF8A
G146	EID7A	EID6A	EID5A	EID4A	EID3A	EID2A	EID1A	EID0A
G147	EID15A	EID14A	EID13A	EID12A	EID11A	EID10A	EID9A	EID8A
G148	EID23A	EID22A	EID21A	EID20A	EID19A	EID18A	EID17A	EID16A

	#7	#6	#5	#4	#3	#2	#1	#0
G149	EID31A	EID30A	EID29A	EID28A	EID27A	EID26A	EID25A	EID24A
G150	DRNE	RTE	OVCE				ROV2E	ROV1E
G151	*FV7E	*FV6E	*FV5E	*FV4E	*FV3E	*FV2E	*FV1E	*FV0E
G152								
G153								
G154	EBUFB	ECLRB	ESTPB	ESOFB	ESBKB	EMBUFB	ELCKZB	EFINB
G155	EMSBKB	EC6B	EC5B	EC4B	EC3B	EC2B	EC1B	EC0B
G156	EIF7B	EIF6B	EIF5B	EIF4B	EIF3B	EIF2B	EIF1B	EIF0B
G157	EIF15B	EIF14B	EIF13B	EIF12B	EIF11B	EIF10B	EIF9B	EIF8B
G158	EID7B	EID6B	EID5B	EID4B	EID3B	EID2B	EID1B	EID0B
G159	EID15B	EID14B	EID13B	EID12B	EID11B	EID10B	EID9B	EID8B
G160	EID23B	EID22B	EID21B	EID20B	EID19B	EID18B	EID17B	EID16B
G161	EID31B	EID30B	EID29B	EID28B	EID27B	EID26B	EID25B	EID24B
G162								
G163								
G164								
G165								
G166	EBUFC	ECLRC	ESTPC	ESOFC	ESBKC	EMBUFC	ELCKZC	EFINC
G167	EMSBKC	EC6C	EC5C	EC4C	EC3C	EC2C	EC1C	EC0C
G168	EIF7C	EIF6C	EIF5C	EIF4C	EIF3C	EIF2C	EIF1C	EIF0C
G169	EIF15C	EIF14C	EIF13C	EIF12C	EIF11C	EIF10C	EIF9C	EIF8C
G170	EID7C	EID6C	EID5C	EID4C	EID3C	EID2C	EID1C	EID0C
G171	EID15C	EID14C	EID13C	EID12C	EID11C	EID10C	EID9C	EID8C
G172	EID23C	EID22C	EID21C	EID20C	EID19C	EID18C	EID17C	EID16C
G173	EID31C	EID30C	EID29C	EID28C	EID27C	EID26C	EID25C	EID24C

	#7	#6	#5	#4	#3	#2	#1	#0
G174								
G175								
G176								
G177								
G178	EBUFD	ECLRD	ESTPD	ESOFD	ESBKD	EMBUFD	ELCKZD	EFIND
G179	EMSBKD	EC6D	EC5D	EC4D	EC3D	EC2D	EC1D	EC0D
G180	EIF7D	EIF6D	EIF5D	EIF4D	EIF3D	EIF2D	EIF1D	EIF0D
G181	EIF15D	EIF14D	EIF13D	EIF12D	EIF11D	EIF10D	EIF9D	EIF8D
G182	EID7D	EID6D	EID5D	EID4D	EID3D	EID2D	EID1D	EID0D
G183	EID15D	EID14D	EID13D	EID12D	EID11D	EID10D	EID9D	EID8D
G184	EID23D	EID22D	EID21D	EID20D	EID19D	EID18D	EID17D	EID16D
G185	EID31D	EID30D	EID29D	EID28D	EID27D	EID26D	EID25D	EID24D
G186								
G187								
G188								
G189								
G190								
G191								
G192	IGVRY8	IGVRY7	IGVRY6	IGVRY5	IGVRY4	IGVRY3	IGVRY2	IGVRY1
G193								
G194								
G195								
G196								
G197					MTD	MTC	MTB	MTA
G198	NPOS8	NPOS7	NPOS6	NPOS5	NPOS4	NPOS3	NPOS2	NPOS1

	#7	#6	#5	#4	#3	#2	#1	#0
G199							IOLBH3	IOLBH2
G200	EASIP8	EASIP7	EASIP6	EASIP5	EASIP4	EASIP3	EASIP2	EASIP1
G201								
G202								
G203						FTCLR	FTCAL	FTCMD
G204	MRDYC	ORCML	SFRC	SRVC	CTH1C	CTH2C	TLMHC	TLMLC
G205	RCHC	RSLC	INTGC	SOCNC	MCFNC	SPSLC	*ESPC	ARSTC
G206	RCHHGC	MFNHGC	INCMDC	OVRC	DEFMDC	NRROC	ROTAC	INDXC
G207				DSCNC	SORSLC	MPOFC	SLVC	MORCMC
G208	SHC07	SHC06	SHC05	SHC04	SHC03	SHC02	SHC01	SHC00
G209					SHC11	SHC10	SHC09	SHC08
G210								
G211								
G212								
G213								
G214								
G215								
G216								
G217								
G218								
G219								
G220								
G221								
G222								
G223								

	#7	#6	#5	#4	#3	#2	#1	#0
G224								
G225								
G226								
G227								
G228								
G229								
G230								
G231								
G232								
G233								
G234								
G235								
G236								
G237								
G238								
G239								
G240								
G241								
G242								
G243								
G244								
G245								
G246								
G247								
G248								

	#7	#6	#5	#4	#3	#2	#1	#0
G249								
G250								
G251								
G252								
G253								
G254								
G255								
G256								
G257								
G258								
G259								
G260								
G261								
G262								
G263								
G264								
G265								
G266	MRDYD	ORCMD	SFRD	SRVD	CTH1D	CTH2D	TLMHD	TLMLD
G267	RCHD	RSLD	INTGD	SOCND	MCFND	SPSLD	*ESPD	ARSTD
G268	RCHHGD	MFNHGD	INCMDD	OVRD	DEFMDD	NRROD	ROTAD	INDXD
G269				DSCND	SORSLD	MPOFD	SLVD	MORCMD
G270	SHD07	SHD06	SHD05	SHD04	SHD03	SHD02	SHD01	SHD00
G271					SHD11	SHD10	SHD09	SHD08
G272	R08I4	R07I4	R06I4	R05I4	R04I4	R03I4	R02I4	R01I4
G273	SIND4	SSIN4	SGN4		R12I4	R11I4	R10I4	R09I4

	#7	#6	#5	#4	#3	#2	#1	#0
G274								
G275								
G276								
G277								
G278								
G279								
G280								
G281								
G282								
G283								
G284								
G285								
G286								
G287								
G288								
G289								
G290								
G291								
G292	ITCD							
G293								
G294								
G295								
G296								
G297								
G298								

	#7	#6	#5	#4	#3	#2	#1	#0
G299								
G300								
G301								
G302								
G303								
G304								
G305								
G306								
G307								
G308								
G309								
G310								
G311								
G312								
G313								
G314								
G315								
G316								
G317								
G318								
G319								

CNC → PMC

Address	#7	#6	#5	#4	#3	#2	#1	#0
F000	OP	SA	STL	SPL				RWD
F001	MA		TAP	ENB	DEN	BAL	RST	AL
F002	MDRN	CUT		SRNMV	THRD	CSS	RPDO	INCH
F003	MTCHIN	MEDT	MMEM	MRMT	MMDI	MJ	MH	MINC
F004			MREF	MAFL	MSBK	MABSM	MMLK	MBDT1
F005	MBDT9	MBDT8	MBDT7	MBDT6	MBDT5	MBDT4	MBDT3	MBDT2
F006								
F007	BF			BF	TF	SF	EFD	MF
F008			MF3	MF2				EF
F009	DM00	DM01	DM02	DM30				
F010	M07	M06	M05	M04	M03	M02	M01	M00
F011	M15	M14	M13	M12	M11	M10	M09	M08
F012	M23	M22	M21	M20	M19	M18	M17	M16
F013	M31	M30	M29	M28	M27	M26	M25	M24
F014	M207	M206	M205	M204	M203	M202	M201	M200
F015	M215	M214	M213	M212	M211	M210	M209	M208
F016	M307	M306	M305	M304	M303	M302	M301	M300
F017	M315	M314	M313	M312	M311	M310	M309	M308
F018								
F019								
F020								
F021								
F022	S07	S06	S05	S04	S03	S02	S01	S00
F023	S15	S14	S13	S12	S11	S10	S09	S08
F024	S23	S22	S21	S20	S19	S18	S17	S16

	#7	#6	#5	#4	#3	#2	#1	#0
F025	S31	S30	S29	S28	S27	S26	S25	S24
F026	T07	T06	T05	T04	T03	T02	T01	T00
F027	T15	T14	T13	T12	T11	T10	T09	T08
F028	T23	T22	T21	T20	T19	T18	T17	T16
F029	T31	T30	T29	T28	T27	T26	T25	T24
F030	B07	B06	B05	B04	B03	B02	B01	B00
F031	B15	B14	B13	B12	B11	B10	B09	B08
F032	B23	B22	B21	B20	B19	B18	B17	B16
F033	B31	B30	B29	B28	B27	B26	B25	B24
F034						GR3O	GR2O	GR1O
F035								SPAL
F036	R08O	R07O	R06O	R05O	R04O	R03O	R02O	R01O
F037					R12O	R11O	R10O	R09O
F038					ENB3	ENB2	SUCLP	SCLP
F039					CHPCYL	CHPMD	ENB4	
F040	AR7	AR6	AR5	AR4	AR3	AR2	AR1	AR0
F041	AR15	AR14	AR13	AR12	AR11	AR10	AR09	AR08
F042								
F043								
F044				SYCAL	FSPPH	FSPSY	FSCSL	
F045	ORARA	TLMA	LDT2A	LDT1A	SARA	SDTA	SSTA	ALMA
F046	MORA2A	MORA1A	PORA2A	SLVSA	RCFNA	RCHPA	CFINA	CHPA
F047				EXOFA	SORENA	MSOVRA	INCSTA	PC1DTA
F048								
F049	ORARB	TLMB	LDT2B	LDT1B	SARB	SDTB	SSTB	ALMB

	#7	#6	#5	#4	#3	#2	#1	#0
F050	MORA2B	MORA1B	PORA2B	SLVSB	RCFNB	RCHPB	CFINB	CHPB
F051				EXOFB	SORENB	MSOVRB	INCSTB	PC1DTB
F052								
F053	EKENB			BGEACT	RPALM	RPBSY	PRGDPL	INHKY
F054	UO007	UO006	UO005	UO004	UO003	UO002	UO001	UO000
F055	UO015	UO014	UO013	UO012	UO011	UO010	UO009	UO008
F056	UO107	UO106	UO105	UO104	UO103	UO102	UO101	UO100
F057	UO115	UO114	UO113	UO112	UO111	UO110	UO109	UO108
F058	UO123	UO122	UO121	UO120	UO119	UO118	UO117	UO116
F059	UO131	UO130	UO129	UO128	UO127	UO126	UO125	UO124
F060						ESCAN	ESEND	EREND
F061							BCLP	BUCLP
F062	PRTSF			S2MES	S1MES			
F063	PSYN					PSAR	PSE2	PSE1
F064					TLCHB	TLCHI	TLNW	TLCH
F065	HOBSYN	SYNMOD	MSPCF	RTRCTF			RGSPM	RGSPP
F066	EXHPCC	MHPCC	PECK2				RTPT	G08MD
F067								
F068								
F069	RMTDO7	RMTDO6	RMTDO5	RMTDO4	RMTDO3	RMTDO2	RMTDO1	RMTDO0
F070	PSW08	PSW07	PSW06	PSW05	PSW04	PSW03	PSW02	PSW01
F071	PSW16	PSW15	PSW14	PSW13	PSW12	PSW11	PSW10	PSW09
F072	OUT7	OUT6	OUT5	OUT4	OUT3	OUT2	OUT1	OUT0
F073				ZRNO		MD4O	MD2O	MD1O
F074								

	#7	#6	#5	#4	#3	#2	#1	#0
F075	SPO	KEYO	DRNO	MLKO	SBKO	BDTO		
F076			ROV2O	ROV1O	RTAP		MP2O	MP1O
F077		RTO			HS1DO	HS1CO	HS1BO	HS1AO
F078	*FV7O	*FV6O	*FV5O	*FV4O	*FV3O	*FV2O	*FV1O	*FV0O
F079	*JV7O	*JV6O	*JV5O	*JV4O	*JV3O	*JV2O	*JV1O	*JV0O
F080	*JV15O	*JV14O	*JV13O	*JV12O	*JV11O	*JV10O	*JV9O	*JV8O
F081	– J4O	+ J4O	– J3O	+ J3O	– J2O	+ J2O	– J1O	+ J1O
F082						RVSL		
F083								
F084								
F085								
F086								
F087								
F088								
F089								
F090					ABTSP3	ABTSP2	ABTSP1	ABTQSV
F091								
F092			TRSPS		TRACT			
F093								
F094	ZP8	ZP7	ZP6	ZP5	ZP4	ZP3	ZP2	ZP1
F095								
F096	ZP28	ZP27	ZP26	ZP25	ZP24	ZP23	ZP22	ZP21
F097								
F098	ZP38	ZP37	ZP36	ZP35	ZP34	ZP33	ZP32	ZP31
F099								

	#7	#6	#5	#4	#3	#2	#1	#0
F100	ZP48	ZP47	ZP46	ZP45	ZP44	ZP43	ZP42	ZP41
F101								
F102	MV8	MV7	MV6	MV5	MV4	MV3	MV2	MV1
F103								
F104	INP8	INP7	INP6	INP5	INP4	INP3	INP2	INP1
F105								
F106	MVD8	MVD7	MVD6	MVD5	MVD4	MVD3	MVD2	MVD1
F107								
F108	MMI8	MMI7	MMI6	MMI5	MMI4	MMI3	MMI2	MMI1
F109								
F110	MDTCH8	MDTCH7	MDTCH6	MDTCH5	MDTCH4	MDTCH3	MDTCH2	MDTCH1
F111								
F112	EADEN8	EADEN7	EADEN6	EADEN5	EADEN4	EADEN3	EADEN2	EADEN1
F113								
F114	TRQL8	TRQL7	TRQL6	TRQL5	TRQL4	TRQL3	TRQL2	TRQL1
F115								
F116	FRP8	FRP7	FRP6	FRP5	FRP4	FRP3	FRP2	FRP1
F117								
F118	SYN8O	SYN7O	SYN6O	SYN5O	SYN4O	SYN3O	SYN2O	SYN1O
F119								
F120	ZRF8	ZRF7	ZRF6	ZRF5	ZRF4	ZRF3	ZRF2	ZRF1
F121								
F122	HDO7	HDO6	HDO5	HDO4	HDO3	HDO2	HDO1	HDO0
F123								
F124	+OT8	+OT7	+OT6	+OT5	+OT4	+OT3	+OT2	+OT1

	#7	#6	#5	#4	#3	#2	#1	#0
F125								
F126	–OT8	–OT7	–OT6	–OT5	–OT4	–OT3	–OT2	–OT1
F127								
F128								
F129	*EAXSL		EOV0					
F130	EBSYA	EOTNA	EOTPA	EGENA	EDENA	EIALA	ECKZA	EINPA
F131							EABUFA	EMFA
F132	EM28A	EM24A	EM22A	EM21A	EM18A	EM14A	EM12A	EM11A
F133	EBSYB	EOTNB	EOTPB	EGENB	EDENB	EIALB	ECKZB	EINPB
F134							EABUFB	EMFB
F135	EM28B	EM24B	EM22B	EM21B	EM18B	EM14B	EM12B	EM11B
F136	EBSYC	EOTNC	EOTPC	EGENC	EDENC	EIALC	ECKZC	EINPC
F137							EABUFC	EMFC
F138	EM28C	EM24C	EM22C	EM21C	EM18C	EM14C	EM12C	EM11C
F139	EBSYD	EOTND	EOTPD	EGEND	EDEND	EIALD	ECKZD	EINPD
F140							EABUFD	EMFD
F141	EM28D	EM24D	EM22D	EM21D	EM18D	EM14D	EM12D	EM11D
F142	EM48A	EM44A	EM42A	EM41A	EM38A	EM34A	EM32A	EM31A
F143								
F144								
F145	EM48B	EM44B	EM42B	EM41B	EM38B	EM34B	EM32B	EM31B
F146								
F147								
F148	EM48C	EM44C	EM42C	EM41C	EM38C	EM34C	EM32C	EM31C
F149								

	#7	#6	#5	#4	#3	#2	#1	#0
F150								
F151	EM48D	EM44D	EM42D	EM41D	EM38D	EM34D	EM32D	EM31D
F152								
F153								
F154								
F155								
F156								
F157								
F158								
F159								
F160								
F161								
F162								
F163								
F164								
F165								
F166								
F167								
F168	ORARC	TLMC	LDT2C	LDT1C	SARC	SDTC	SSTC	ALMC
F169	MORA2C	MORA1C	PORA2C	SLVSC	RCFNC	RCHPC	CFINC	CHPC
F170				EXOFC	SORENC	MSOVRC	INCSTC	PC1DTC
F171								
F172	PBATL	PBATZ						
F173								
F174								

	#7	#6	#5	#4	#3	#2	#1	#0
F175								
F176								
F177	EDGN	EPARM	EVAR	EPRG	EWTIO	ESTPIO	ERDIO	IOLNK
F178					SRLNO3	SRLNO2	SRLNO1	SRLNO0
F179								
F180	CLRCH8	CLRCH7	CLRCH6	CLRCH5	CLRCH4	CLRCH3	CLRCH2	CLRCH1
F181								
F182	EACNT8	EACNT7	EACNT6	EACNT5	EACNT4	EACNT3	EACNT2	EACNT1
F183								
F184								
F185								
F186								
F187								
F188								
F189								
F190								
F191								
F192								
F193								
F194								
F195								
F196								
F197					MFSYND	MFSYNC	MFSYNB	MFSYNA
F198								
F199								

	#7	#6	#5	#4	#3	#2	#1	#0
F200								
F201								
F202								
F203								
F204								
F205								
F206								
F207								
F208	EGBM8	EGBM7	EGBM6	EGBM5	EGBM4	EGBM3	EGBM2	EGBM1
F209								
F210								
F211								
F212								
F213								
F214								
F215								
F216								
F217								
F218								
F219								
F220								
F221								
F222								
F223								
F224								

	#7	#6	#5	#4	#3	#2	#1	#0
F225								
F226								
F227								
F228								
F229								
F230								
F231								
F232								
F233								
F234								
F235								
F236								
F237								
F238								
F239								
F240								
F241								
F242								
F243								
F244								
F245								
F246								
F247								
F248								
F249								

	#7	#6	#5	#4	#3	#2	#1	#0
F250								
F251								
F252								
F253								
F254								
F255								
F256								
F257								
F258								
F259								
F260								
F261								
F262								
F263								
F264	SPWRN8	SPWRN7	SPWRN6	SPWRN5	SPWRN4	SPWRN3	SPWRN2	SPWRN1
F265								SPWRN9
F266	ORARD	TLMD	LDT2D	LDT1D	SARD	SDTD	SSTD	ALMD
F267	MORA2D	MORA1D	PORA2D	SLVSD	RCFND	RCHPD	CFIND	CHPD
F268				EXOFD	SOREND	MSOVRD	INCSTD	PC1DTD
F269								
F270								
F271								
F272								
F273								
F274								

	#7	#6	#5	#4	#3	#2	#1	#0
F275								
F276								
F277								
F278								
F279								
F280								
F281								
F282								
F283								
F284								
F285								
F286								
F287								
F288								
F289								
F290								
F291								
F292								
F293								
F294								
F295								
F296								
F297								
F298								
F299								

	#7	#6	#5	#4	#3	#2	#1	#0
F300								
F301								
F302								
F303								
F304								
F305								
F306								
F307								
F308								
F309								
F310								
F311								
F312								
F313								
F314								
F315								

- **Address list (2–path control)**

In general, signal addresses are assigned to each path as indicated below. However, some signals common to both paths are allocated to path 1. The table below indicates the addresses of the interface signals between the CNC and PMC. A signal marked with #1 is dedicated to path 1, and a signal marked with #2 is dedicated to path 2.

Signal address	Description
G000 to G512	Signals for path 1 (PMC→CNC)
F000 to F512	Signals for path 1 (CNC→PMC)
G1000 to G1512	Signals for path 2 (PMC→CNC)
F1000 to F1512	Signals for path 2 (CNC→PMC)

MT → PMC

Address	Bit number #7	#6	#5	#4	#3	#2	#1	#0	
X000									
X001									
X002									
X003									
X004	SKIP #1	ESKIP SKIP6 #1	–MIT2 SKIP5 #1	+MIT2 SKIP4 #1	–MIT1 SKIP3 #1	+MIT1 SKIP2 #1	ZAE SKIP8 #1	XAE SKIP7 #1	(T series)
	SKIP #1	ESKIP SKIP6 #1	SKIP5 #1	SKIP4 #1	SKIP3 #1	ZAE SKIP2 #1	YAE SKIP8 #1	XAE SKIP7 #1	(M series)
X005									
X006									
X007	*DEC8 #2	*DEC7 #2	*DEC6 #2	*DEC5 #2	*DEC4 #2	*DEC3 #2	*DEC2 #2	*DEC1 #2	
X008				*ESP					
X009	*DEC8 #1	*DEC7 #1	*DEC6 #1	*DEC5 #1	*DEC4 #1	*DEC3 #1	*DEC2 #1	*DEC1 #1	
X010									
X011									
X012									
X013	SKIP #2	SKIP6 #2	–MIT2 SKIP5 #2	+MIT2 SKIP4 #2	–MIT1 SKIP3 #2	+MIT1 SKIP2 #2	ZAE SKIP8 #2	XAE SKIP7 #2	(T series)
	SKIP #2	SKIP6 #2	SKIP5 #2	SKIP4 #2	SKIP3 #2	ZAE SKIP2 #2	YAE SKIP8 #2	XAE SKIP7 #2	(M series)

PMC → CNC Path 1

Address	Bit number							
	#7	#6	#5	#4	#3	#2	#1	#0
G000	ED7 #1	ED6 #1	ED5 #1	ED4 #1	ED3 #1	ED2 #1	ED1 #1	ED0 #1
G001	ED15 #1	ED14 #1	ED13 #1	ED12 #1	ED11 #1	ED10 #1	ED9 #1	ED8 #1
G002	ESTB #1	EA6 #1	EA5 #1	EA4 #1	EA3 #1	EA2 #1	EA1 #1	EA0 #1
G003								
G004			MFIN3#1	MFIN2#1	FIN #1			
G005	BFIN #1	AFL #1		BFIN #1	TFIN #1	SFIN #1	EFIN #1	MFIN #1
G006		SKIPP#1		OVC #1		*ABSM#1		SRN #1
G007	RLSOT #1	EXLM #1	*FLWP#1	RLSOT3 #1		ST #1	STLK #1	RVS #1
G008	ERS #1	RRW #1	*SP #1	*ESP #1	*BSL#1		*CSL#1	*IT #1
G009				PN16 #1	PN8 #1	PN4 #1	PN2 #1	PN1 #1
G010	*JV7 #1	*JV6 #1	*JV5 #1	*JV4 #1	*JV3 #1	*JV2 #1	*JV1 #1	*JV0 #1
G011	*JV15 #1	*JV14 #1	*JV13 #1	*JV12 #1	*JV11 #1	*JV10 #1	*JV9 #1	*JV8 #1
G012	*FV7 #1	*FV6 #1	*FV5 #1	*FV4 #1	*FV3 #1	*FV2 #1	*FV1 #1	*FV0 #1
G013	*AFV7#1	*AFV6#1	*AFV5#1	*AFV4#1	*AFV3#1	*AFV2#1	*AFV1#1	*AFV0#1
G014							ROV2 #1	ROV1 #1
G015								
G016	F1D #1							MSDFON#1
G017								
G018	HS2D #1	HS2C #1	HS2B #1	HS2A #1	HS1D #1	HS1C #1	HS1B #1	HS1A #1
G019	RT #1		MP2 #1	MP1 #1	HS3D #1	HS3C #1	HS3B #1	HS3A #1
G020								
G021								
G022								
G023	ALNGH #1	RGHTH#1						
G024	EPN7#1	EPN6#1	EPN5#1	EPN4#1	EPN3#1	EPN2#1	EPN1#1	EPN0#1

	#7	#6	#5	#4	#3	#2	#1	#0
G025	EPNS#1		EPN13#1	EPN12#1	EPN11#1	EPN10#1	EPN9#1	EPN8#1
G026		*SSTP4#1			SWS4#1		PC4SLC#1	PC3SLC#1
G027	CON #1		*SSTP3#1	*SSTP2#1	*SSTP1#1	SWS3 #1	SWS2 #1	SWS1 #1
G028	PC2SLC#1	SPSTP#1	*SCPF#1	*SUCPF#1		GR2 #1	GR1 #1	
G029		*SSTP#1	SOR #1	SAR #1		GR31 #1		GR21 #1
G030	SOV7 #1	SOV6 #1	SOV5 #1	SOV4 #1	SOV3 #1	SOV2 #1	SOV1 #1	SOV0 #1
G031	PKESS2#1	PKESS1#1		GR41#1				
G032	R08I #1	R07I #1	R06I #1	R05I #1	R04I #1	R03I #1	R02I #1	R01I #1
G033	SIND #1	SSIN #1	SGN #1		R12I #1	R11I #1	R10I #1	R09I #1
G034	R08I2 #1	R07I2 #1	R06I2 #1	R05I2 #1	R04I2 #1	R03I2 #1	R02I2 #1	R01I2 #1
G035	SIND2#1	SSIN2#1	SGN2#1		R12I2 #1	R11I2 #1	R10I2 #1	R09I2 #1
G036	R08I3 #1	R07I3 #1	R06I3 #1	R05I3 #1	R04I3 #1	R03I3 #1	R02I3 #1	R01I3 #1
G037	SIND3#1	SSIN3#1	SGN3#1		R12I3 #1	R11I3 #1	R10I3 #1	R09I3 #1
G038	*BECLP #1	*BEUCP #1			SPPHS / SPPHS #1	SPSYC / SPSYC #1		*PLSST#1
G039	GOQSM#1	WOQSM#1	OFN5 #1	OFN4 #1	OFN3 #1	OFN2 #1	OFN1 #1	OFN0 #1
G040	WOSET#1	PRC #1	S2TLS#1					OFN6 #1
G041	HS2ID#1	HS2IC#1	HS2IB#1	HS2IA#1	HS1ID#1	HS1IC#1	HS1IB#1	HS1IA#1
G042					HS3ID#1	HS3IC#1	HS3IB#1	HS3IA#1
G043	ZRN #1		DNCI #1			MD4 #1	MD2 #1	MD1 #1
G044							MLK #1	BDT1 #1
G045	BDT9 #1	BDT8 #1	BDT7 #1	BDT6 #1	BDT5 #1	BDT4 #1	BDT3 #1	BDT2 #1
G046	DRN #1	KEY4 #1	KEY3 #1	KEY2 #1	KEY1 #1		SBK #1	
G047	TL128 #1	TL64 #1	TL32 #1	TL16 #1	TL08 #1	TL04 #1	TL02 #1	TL01 #1
G048	TLRST#1	TLRSTI#1	TLSKP#1					TL256 #1
G049	*TLV7 #1	*TLV6 #1	*TLV5 #1	*TLV4#1	*TLV3 #1	*TLV2 #1	*TLV1 #1	*TLV0 #1

	#7	#6	#5	#4	#3	#2	#1	#0
G050							*TLV9 #1	*TLV8 #1
G051	*CHLD #1	CHPST #1			*CHP8 #1	*CHP4 #1	*CHP2 #1	*CHP0 #1
G052								
G053	CDZ #1	SMZ #1			UINT #1			TMRON#1
G054	UI007 #1	UI006 #1	UI005 #1	UI004 #1	UI003 #1	UI002 #1	UI001 #1	UI000 #1
G055	UI015 #1	UI014 #1	UI013 #1	UI012 #1	UI011 #1	UI010 #1	UI009 #1	UI008 #1
G056								
G057								
G058					EXWT #1	EXSTP #1	EXRD #1	MINP#1
G059							TRRTN #1	TRESC #1
G060	*TSB #1							
G061			RGTSP2#1	RGTSP1#1				RGTAP#1
G062		RTNT#1	PDT2#1	PDT1#1			*CRTOF#1	
G063		INFD #1	NOZAGC#1		SLSPB	SLSPA	NOWT	HEAD
G064		ESRSYC#1			SLPCB	SLPCA		
G065	HCSKP4#1	HCSKP3#1	HCSKP2#1	HCSKP1#1				
G066	EKSET		MSPC#1	RTRCT#1		HOBCAN#1	ENBKY	IGNVRY#1
G067								
G068								
G069								
G070	MRDYA#1	ORCMA#1	SFRA #1	SRVA #1	CTH1A#1	CTH2A#1	TLMHA#1	TLMLA#1
G071	RCHA #1	RSLA #1	INTGA #1	SOCNA#1	MCFNA#1	SPSLA#1	*ESPA#1	ARSTA#1
G072	RCHHGA#1	MFNHGA#1	INCMDA#1	OVRA#1	DEFMDA#1	NRROA#1	ROTAA#1	INDXA#1
G073				DSCNA#1	SORSLA#1	MPOFA#1	SLVA #1	MORCMA#1
G074	MRDYB#1	ORCMB#1	SFRB #1	SRVB #1	CTH1B#1	CTH2B#1	TLMHB#1	TLMLB#1

	#7	#6	#5	#4	#3	#2	#1	#0
G075	RCHB#1	RSLB #1	INTGB #1	SOCNB#1	MCFNB#1	SPSLB#1	*ESPB#1	ARSTB#1
G076	RCHHGB#1	MFNHGB#1	INCMDB#1	OVRB#1	DEFMDB#1	NRROB#1	ROTAB#1	INDXB#1
G077				DSCNB#1	SORSLB#1	MPOFB#1	SLVB#1	MORCMB#1
G078	SHA07#1	SHA06#1	SHA05#1	SHA04#1	SHA03#1	SHA02#1	SHA01#1	SHA00#1
G079					SHA11#1	SHA10#1	SHA09#1	SHA08#1
G080	SHB07#1	SHB06#1	SHB05#1	SHB04#1	SHB03#1	SHB02#1	SHB01#1	SHB00#1
G081					SHB11#1	SHB10#1	SHB09#1	SHB08#1
G082	Reserved for order made macro							
G083	Reserved for order made macro							
G084								
G085								
G086								
G087								
G088								
G089								
G090	G2SLC#1	G2Y#1	G2Z#1	G2X#1		G2RVY#1	G2RVZ#1	G2RVX#1
G091					SRLNI3#1	SRLNI2#1	SRLNI1#1	SRLNI0#1
G092				BGEN#1	BGIALM#1	BGION#1	IOLS#1	IOLACK#1
G093								
G094								
G095								
G096	HROV#1	*HROV6#1	*HROV5#1	*HROV4#1	*HROV3#1	*HROV2#1	*HROV1#1	*HROV0#1
G097								
G098	EKC7	EKC6	EKC5	EKC4	EKC3	EKC2	EKC1	EKC0
G099								

	#7	#6	#5	#4	3#	#2	#1	#0	
G100	+J8#1	+J7#1	+J6#1	+J5#1	+J4 #1	+J3 #1	+J2 #1	+J1 #1	
G101									
G102	–J8 #1	–J7 #1	–J6 #1	–J5 #1	–J4 #1	–J3 #1	–J2 #1	–J1 #1	
G103									
G104	+EXL8#1	+EXL7#1	+EXL6#1	+EXL5#1	+EXL4#1	+EXL3#1	+EXL2#1	+EXL1#1	
G105	–EXL8#1	–EXL7#1	–EXL6#1	–EXL5#1	–EXL4#1	–EXL3#1	–EXL2#1	–EXL1#1	
G106	MI8 #1	MI7 #1	MI6 #1	MI5 #1	MI4 #1	MI3 #1	MI2 #1	MI1 #1	
G107									
G108	MLK8 #1	MLK7 #1	MLK6 #1	MLK5 #1	MLK4 #1	MLK3 #1	MLK2 #1	MLK1 #1	
G109									
G110		+LM7 #1	+LM6 #1	+LM5 #1	+LM4 #1	+LM3 #1	+LM2 #1	+LM1 #1	
G111									
G112		–LM7 #1	–LM6 #1	–LM5 #1	–LM4 #1	–LM3 #1	–LM2 #1	–LM1 #1	
G113									
G114	*+L8 #1	*+L7 #1	*+L6 #1	*+L5 #1	*+L4 #1	*+L3 #1	*+L2 #1	*+L1 #1	
G115									
G116	*–L8 #1	*–L7 #1	*–L6 #1	*–L5 #1	*–L4 #1	*–L3 #1	*–L2 #1	*–L1 #1	
G117									
G118	*+ED8#1	*+ED7#1	*+ED6#1	*+ED5#1	*+ED4#1	*+ED3#1	*+ED2#1	*+ED1#1	
G119									
G120	*–ED8#1	*–ED7#1	*–ED6#1	*–ED5#1	*–ED4#1	*–ED3#1	*–ED2#1	*–ED1#1	
G121									
G122	PKESS2#1	PK7#1 / PKESS1#1	PK6 #1	PK5 #1	PK4 #1	PK3 #1	PK2 #1	PK1 #1	(T series)
	PKESS2#1	PKESS1#1							(M series)
G123									

	#7	#6	#5	#4	#3	#2	#1	#0
G124	DTCH8#1	DTCH7#1	DTCH6#1	DTCH5#1	DTCH4#1	DTCH3#1	DTCH2#1	DTCH1#1
G125	IUDD8#1	IUDD7#1	IUDD6#1	IUDD5#1	IUDD4#1	IUDD3#1	IUDD2#1	IUDD1#1
G126	SVF8 #1	SVF7 #1	SVF6 #1	SVF5 #1	SVF4 #1	SVF3 #1	SVF2 #1	SVF1 #1
G127								
G128	MIX8	MIX7	MIX6	MIX5	MIX4	MIX3	MIX2	MIX1
G129								
G130	*IT8 #1	*IT7 #1	*IT6 #1	*IT5 #1	*IT4 #1	*IT3 #1	*IT2 #1	*IT1 #1
G131								
G132					+MIT4 #1	+MIT3 #1	+MIT2 #1	+MIT1 #1
G133								
G134					–MIT4 #1	–MIT3 #1	–MIT2 #1	–MIT1 #1
G135								
G136	EAX8 #1	EAX7 #1	EAX6 #1	EAX5 #1	EAX4 #1	EAX3 #1	EAX2 #1	EAX1 #1
G137								
G138	SYNC8#1	SYNC7#1	SYNC6#1	SYNC5#1	SYNC4#1	SYNC3#1	SYNC2#1	SYNC1#1
G139								
G140		SYNCJ7#1	SYNCJ6#1	SYNCJ5#1	SYNCJ4#1	SYNCJ3#1	SYNCJ2#1	SYNCJ1#1
G141								
G142	EBUFA#1	ECLRA#1	ESTPA#1	ESOFA#1	ESBKA#1	EMBUFA#1	ELCKZA#1	EFINA#1
G143	EMSBKA#1	EC6A #1	EC5A #1	EC4A #1	EC3A #1	EC2A #1	EC1A #1	EC0A #1
G144	EIF7A #1	EIF6A #1	EIF5A #1	EIF4A #1	EIF3A #1	EIF2A #1	EIF1A #1	EIF0A #1
G145	EIF15A#1	EIF14A#1	EIF13A#1	EIF12A#1	EIF11A#1	EIF10A#1	EIF9A #1	EIF8A #1
G146	EID7A#1	EID6A#1	EID5A#1	EID4A#1	EID3A#1	EID2A#1	EID1A#1	EID0A#1
G147	EID15A#1	EID14A#1	EID13A#1	EID12A#1	EID11A#1	EID10A#1	EID9A#1	EID8A#1
G148	EID23A#1	EID22A#1	EID21A#1	EID20A#1	EID19A#1	EID18A#1	EID17A#1	EID16A#1

	#7	#6	#5	#4	#3	#2	#1	#0
G149	EID31A#1	EID30A#1	EID29A#1	EID28A#1	EID27A#1	EID26A#1	EID25A#1	EID24A#1
G150	DRNE#1	RTE #1	OVCE#1				ROV2E#1	ROV1E#1
G151	*FV7E#1	*FV6E#1	*FV5E#1	*FV4E#1	*FV3E#1	*FV2E#1	*FV1E#1	*FV0E#1
G152								
G153								
G154	EBUFB#1	ECLRB#1	ESTPB#1	ESOFB#1	ESBKB#1	EMBUFB#1	ELCKZB#1	EFINB#1
G155	EMSBKB#1	EC6B #1	EC5B #1	EC4B #1	EC3B #1	EC2B #1	EC1B #1	EC0B #1
G156	EIF7B#1	EIF6B#1	EIF5B#1	EIF4B#1	EIF3B#1	EIF2B#1	EIF1B#1	EIF0B#1
G157	EIF15B#1	EIF14B#1	EIF13B#1	EIF12B#1	EIF11B#1	EIF10B#1	EIF9B#1	EIF8B#1
G158	EID7B#1	EID6B#1	EID5B#1	EID4B#1	EID3B#1	EID2B#1	EID1B#1	EID0B#1
G159	EID15B#1	EID14B#1	EID13B#1	EID12B#1	EID11B#1	EID10B#1	EID9B#1	EID8B#1
G160	EID23B#1	EID22B#1	EID21B#1	EID20B#1	EID19B#1	EID18B#1	EID17B#1	EID16B#1
G161	EID31B#1	EID30B#1	EID29B#1	EID28B#1	EID27B#1	EID26B#1	EID25B#1	EID24B#1
G162								
G163								
G164								
G165								
G166	EBUFC#1	ECLRC#1	ESTPC#1	ESOFC#1	ESBKC#1	EMBUFC#1	ELCKZC#1	EFINC#1
G167	EMSBKC#1	EC6C #1	EC5C #1	EC4C #1	EC3C #1	EC2C #1	EC1C #1	EC0C #1
G168	EIF7C#1	EIF6C#1	EIF5C#1	EIF4C#1	EIF3C#1	EIF2C#1	EIF1C#1	EIF0C#1
G169	EIF15C#1	EIF14C#1	EIF13C#1	EIF12C#1	EIF11C#1	EIF10C#1	EIF9C#1	EIF8C#1
G170	EID7C#1	EID6C#1	EID5C#1	EID4C#1	EID3C#1	EID2C#1	EID1C#1	EID0C#1
G171	EID15C#1	EID14C#1	EID13C#1	EID12C#1	EID11C#1	EID10C#1	EID9C#1	EID8C#1
G172	EID23C#1	EID22C#1	EID21C#1	EID20C#1	EID19C#1	EID18C#1	EID17C#1	EID16C#1
G173	EID31C#1	EID30C#1	EID29C#1	EID28C#1	EID27C#1	EID26C#1	EID25C#1	EID24C#1

	#7	#6	#5	#4	#3	#2	#1	#0
G174								
G175								
G176								
G177								
G178	EBUFD#1	ECLRD#1	ESTPD#1	ESOFD#1	ESBKD#1	EMBUFD#1	ELCKZD#1	EFIND#1
G179	EMSBKD#1	EC6D #1	EC5D #1	EC4D #1	EC3D #1	EC2D #1	EC1D #1	EC0D #1
G180	EIF7D#1	EIF6D#1	EIF5D#1	EIF4D#1	EIF3D#1	EIF2D#1	EIF1D#1	EIF0D#1
G181	EIF15D#1	EIF14D#1	EIF13D#1	EIF12D#1	EIF11D#1	EIF10D#1	EIF9D#1	EIF8D#1
G182	EID7D#1	EID6D#1	EID5D#1	EID4D#1	EID3D#1	EID2D#1	EID1D#1	EID0D#1
G183	EID15D#1	EID14D#1	EID13D#1	EID12D#1	EID11D#1	EID10D#1	EID9D#1	EID8D#1
G184	EID23D#1	EID22D#1	EID21D#1	EID20D#1	EID19D#1	EID18D#1	EID17D#1	EID16D#1
G185	EID31D#1	EID30D#1	EID29D#1	EID28D#1	EID27D#1	EID26D#1	EID25D#1	EID24D#1
G186								
G187								
G188								
G189								
G190	OVLS8#1	OVLS7#1	OVLS6#1	OVLS5#1	OVLS4#1	OVLS3#1	OVLS2#1	OVLS1#1
G191								
G192	IGVRY8#1	IGVRY7#1	IGVRY6#1	IGVRY5#1	IGVRY4#1	IGVRY3#1	IGVRY2#1	IGVRY1#1
G193								
G194								
G195								
G196								
G197								
G198	NPOS8#1	NPOS7#1	NPOS6#1	NPOS5#1	NPOS4#1	NPOS3#1	NPOS2#1	NPOS1#1

	#7	#6	#5	#4	#3	#2	#1	#0
G199								
G200	EASIP8#1	EASIP7#1	EASIP6#1	EASIP5#1	EASIP4#1	EASIP3#1	EASIP2#1	EASIP1#1
G201								
G202								
G203								
G204	MRDYC#1	ORCMC#1	SFRC#1	SRVC#1	CTH1C#1	CTH2C#1	TLMHC#1	TLMLC#1
G205	RCHC#1	RSLC#1	INTGC#1	SOCNC#1	MCFNC#1	SPSLC#1	*ESPC#1	ARSTC#1
G206	RCHHGC#1	MFNHGC#1	INCMDC#1	OVRC#1	DEFMDC#1	NRROC#1	ROTBC#1	INDXC#1
G207				DSCNC#1	SORSLC#1	MPOFC#1	SLVC#1	MORCMC#1
G208								
G209								
G210								
G211								
G212								
G213								
G214								
G215								
G216								
G217								
G218								
G219								
G220								
G221								
G222								
G223								

	#7	#6	#5	#4	#3	#2	#1	#0
G224								
G225								
G226								
G227								
G228								
G229								
G230								
G231								
G232								
G233								
G234								
G235								
G236								
G237								
G238								
G239								
G240								
G241								
G242								
G243								
G244								
G245								
G246								
G247								
G248								

	#7	#6	#5	#4	#3	#2	#1	#0
G249								
G250								
G251								
G252								
G253								
G254								
G255								
G256								
G257								
G258								
G259								
G260								
G261								
G262								
G263								
G264								
G265								
G266	MRDYD#1	ORCMD#1	SFRD#1	SRVD#1	CTH1D#1	CTH2D#1	TLMHD#1	TLMLD#1
G267	RCHD#1	RSLD#1	INTGD#1	SOCND#1	MCFND#1	SPSLD#1	*ESPD#1	ARSTD#1
G268	RCHHGD#1	MFNHGD#1	INCMDD#1	OVRD#1	DEFMDD#1	NRROD#1	ROTBD#1	INDXD#1
G269				DSCND#1	SORSLD#1	MPOFD#1	SLVD#1	MORCMD#1
G270	SHD07#1	SHD06#1	SHD05#1	SHD04#1	SHD03#1	SHD02#1	SHD01#1	SHD00#1
G271					SHD11#1	SHD10#1	SHD09#1	SHD08#1
G272	R08I4#1	R07I4#1	R06I4#1	R05I4#1	R04I4#1	R03I4#1	R02I4#1	R01I4#1
G273	SIND4#1	SSIN4#1	SGN4#1		R12I4#1	R11I4#1	R10I4#1	R09I4#1

	#7	#6	#5	#4	#3	#2	#1	#0
G274								
G275								
G276								
G277								
G278								
G279								
G280								
G281								
G282								
G283								
G284								
G285								
G286								
G287								
G288								
G289								
G290								
G291								
G292	ITCD[#1]							
G293								
G294								
G295								
G296								
G297								
G298								

	#7	#6	#5	#4	#3	#2	#1	#0
G299								
G300								
G301								
G302								
G303								
G304								
G305								
G306								
G307								
G308								
G309								
G310								
G311								
G312								
G313								
G314								
G315								
G316								
G317								
G318								
G319								

PMC → CNC Path 2

Address	Bit number							
	#7	#6	#5	#4	#3	#2	#1	#0
G1000	ED7#2	ED6#2	ED5#2	ED4#2	ED3#2	ED2#2	ED1#2	ED0#2
G1001	ED15#2	ED14#2	ED13#2	ED12#2	ED11#2	ED10#2	ED9#2	ED8#2
G1002	ESTB#2	EA6#2	EA5#2	EA4#2	EA3#2	EA2#2	EA1#2	EA0#2
G1003								
G1004			MFIN3#2	MFIN2#2	FIN#2			
G1005	BFIN#2	AFL#2		BFIN#2	TFIN#2	SFIN#2	EFIN#2	MFIN#2
G1006		SKIPP#2		OVC#2		*ABSM#2		SRN#2
G1007	RLSOT#2	EXLM#2	*FLWP#2	RLSOT3#2		ST#2	STLK#2	RVS#2
G1008	ERS#2	RRW#2	*SP#2	*ESP#2	*BSL#2		*CSL#2	*IT#2
G1009				PN16#2	PN8#2	PN4#2	PN2#2	PN1#2
G1010	*JV7#2	*JV6#2	*JV5#2	*JV4#2	*JV3#2	*JV2#2	*JV1#2	*JV0#2
G1011	*JV15#2	*JV14#2	*JV13#2	*JV12#2	*JV11#2	*JV10#2	*JV9#2	*JV8#2
G1012	*FV7#2	*FV6#2	*FV5#2	*FV4#2	*FV3#2	*FV2#2	*FV1#2	*FV0#2
G1013	*AFV7#2	*AFV6#2	*AFV5#2	*AFV4#2	*AFV3#2	*AFV2#2	*AFV1#2	*AFV0#2
G1014							ROV2#2	ROV1#2
G1015								
G1016	F1D#2							MSDFON#2
G1017								
G1018	HS2D#2	HS2C#2	HS2B#2	HS2A#2	HS1D#2	HS1C#2	HS1B#2	HS1A#2
G1019	RT#2		MP2#2	MP1#2	HS3D#2	HS3C#2	HS3B#2	HS3A#2
G1020								
G1021								
G1022								
G1023	ALNGH#2	RGHTH#2						
G1024	EPN7#2	EPN6#2	EPN5#2	EPN4#2	EPN3#2	EPN2#2	EPN1#2	EPN0#2

	#7	#6	#5	#4	#3	#2	#1	#0
G1025	EPNS#2		EPN13#2	EPN12#2	EPN11#2	EPN10#2	EPN9#2	EPN8#2
G1026		*SSTP4#2		SWS4#2			PC4SLC#2	PC3SLC#2
G1027	CON#2		*SSTP3#2	*SSTP2#2	*SSTP1#2	SWS3#2	SWS2#2	SWS1#2
G1028	PC2SLC#2	SPSTP#2	*SCPF#2	*SUCPF#2		GR2#2	GR1#2	
G1029		*SSTP#2	SOR#2	SAR#2		GR31#2		GR21#2
G1030	SOV7#2	SOV6#2	SOV5#2	SOV4#2	SOV3#2	SOV2#2	SOV1#2	SOV0#2
G1031	PKESS2#2	PKESS1#2		GR41#2				
G1032	R08I#2	R07I#2	R06I#2	R05I#2	R04I#2	R03I#2	R02I#2	R01I#2
GI033	SIND#2	SSIN#2	SGN#2		R12I#2	R11I#2	R10I#2	R09I#2
G1034	R08I2#2	R07I2#2	R06I2#2	R05I2#2	R04I2#2	R03I2#2	R02I2#2	R01I2#2
G1035	SIND2#2	SSIN2#2	SGN2#2		R12I2#2	R11I2#2	R10I2#2	R09I2#2
G1036	R08I3#2	R07I3#2	R06I3#2	R05I3#2	R04I3#2	R03I3#2	R02I3#2	R01I3#2
G1037	SIND3#2	SSIN3#2	SGN3#2		R12I3#2	R11I3#2	R10I3#2	R09I3#2
G1038	*BECLP#2	*BEUCP#2			SPPHS#2	SPSYC#2		*PLSST#2
G1039	GOQSM#2	WOQSM#2	OFN5#2	OFN4#2	OFN3#2	OFN2#2	OFN1#2	OFN0#2
G1040	WOSET#2	PRC#2	S2TLS#2					OFN6#2
G1041	HS2ID#2	HS2IC#2	HS2IB#2	HS2IA#2	HS1ID#2	HS1IC#2	HS1IB#2	HS1IA#2
G1042					HS3ID#2	HS3IC#2	HS3IB#2	HS3IA#2
G1043	ZRN#2		DNCI#2			MD4#2	MD2#2	MD1#2
G1044							MLK#2	BDT1#2
G1045	BDT9#2	BDT8#2	BDT7#2	BDT6#2	BDT5#2	BDT4#2	BDT3#2	BDT2#2
G1046	DRN#2	KEY4#2	KEY3#2	KEY2#2	KEY1#2		SBK#2	
G1047	TL128#2	TL64#2	TL32#2	TL16#2	TL08#2	TL04#2	TL02#2	TL01#2
G1048	TLRST#2	TLRSTI#2	TLSKP#2					TL256#2
G1049	*TLV7#2	*TLV6#2	*TLV5#2	*TLV4#2	*TLV3#2	*TLV2#2	*TLV1#2	*TLV0#2

	#7	#6	#5	#4	#3	#2	#1	#0
G1050							*TLV9 #2	*TLV8 #2
G1051	*CHLD #2	CHPST #2			*CHP8 #2	*CHP4 #2	*CHP2 #2	*CHP0 #2
G1052								
G1053	CDZ#2	SMZ#2			UINT#2			TMRON#2
G1054	UI007#2	UI006#2	UI005#2	UI004#2	UI003#2	UI002#2	UI001#2	UI000#2
G1055	UI015#2	UI014#2	UI013#2	UI012#2	UI011#2	UI010#2	UI009#2	UI008#2
G1056								
G1057								
G1058					EXWT#2	EXSTP#2	EXRD#2	MINP#2
G1059							TRRTN#2	TRESC#2
G1060	*TSB#2							
G1061			RGTSP2#2	RGTSP1#2				RGTAP#2
G1062		RTNT#2	PDT2#2	PDT1#2			*CRTOF#2	
G1063		INFD#2	NOZAGC#2					
G1064		ESRSYC#2						
G1065	HCSKP4#2	HCSKP3#2	HCSKP2#2	HCSKP1#2				
G1066			MSPC#2	RTRCT#2		HOBCAN#2		IGNVRY#2
G1067								
G1068								
G1069								
G1070	MRDYA#2	ORCMA#2	SFRA#2	SRVA#2	CTH1A#2	CTH2A#2	TLMHA#2	TLMLA#2
G1071	RCHA#2	RSLA#2	INTGA #2	SOCNA#2	MCFNA#2	SPSLA#2	*ESPA#2	ARSTA#2
G1072	RCHHGA#2	MFNHGA#2	INCMDA#2	OVRA#2	DEFMDA#2	NRROA#2	ROTAA#2	INDXA#2
G1073				DSCNA#2	SORSLA#2	MPOFA#2	SLVA #2	MORCMA#2
G1074	MRDYB#2	ORCMB#2	SFRB#2	SRVB#2	CTH1B#2	CTH2B#2	TLMHB#2	TLMLB#2

	#7	#6	#5	#4	#3	#2	#1	#0
G1075	RCHB#2	RSLB#2	INTGB #2	SOCNB#2	MCFNB#2	SPSLB#2	*ESPB#2	ARSTB#2
G1076	RCHHGB#2	MFNHGB#2	INCMDB#2	OVRB#2	DEFMDB#2	NRROB#2	ROTAB#2	INDXB#2
G1077				DSCNB#2	SORSLB#2	MPOFB#2	SLVB#2	MORCMB#2
G1078	SHA07#2	SHA06#2	SHA05#2	SHA04#2	SHA03#2	SHA02#2	SHA01#2	SHA00#2
G1079					SHA11#2	SHA10#2	SHA09#2	SHA08#2
G1080	SHB07#2	SHB06#2	SHB05#2	SHB04#2	SHB03#2	SHB02#2	SHB01#2	SHB00#2
G1081					SHB11#2	SHB10#2	SHB09#2	SHB08#2
G1082	Reserved for order made macro							
G1083	Reserved for order made macro							
G1084								
G1085								
G1086								
G1087								
G1088								
G1089								
G1090	G2SLC#2	G2Y#2	G2Z#2	G2X#2		G2RVY#2	G2RVZ#2	G2RVX#2
G1091					SRLNI3#2	SRLNI2#2	SRLNI1#2	SRLNI0#2
G1092				BGEN#2	BGIALM#2	BGION#2	IOLS#2	IOLACK#2
G1093								
G1094								
G1095								
G1096	HROV#2	*HROV6#2	*HROV5#2	*HROV4#2	*HROV3#2	*HROV2#2	*HROV1#2	*HROV0#2
G1097								
G1098								
G1099								

	#7	#6	#5	#4	#3	#2	#1	#0	
G1100	+J8#2	+J7#2	+J6#2	+J5#2	+J4#2	+J3#2	+J2#2	+J1#2	
G1101									
G1102	–J8#2	–J7#2	–J6#2	–J5#2	–J4#2	–J3#2	–J2#2	–J1#2	
G1103									
G1104	+EXL8#2	+EXL7#2	+EXL6#2	+EXL5#2	+EXL4#2	+EXL3#2	+EXL2#2	+EXL1#2	
G1105	–EXL8#2	–EXL7#2	–EXL6#2	–EXL5#2	–EXL4#2	–EXL3#2	–EXL2#2	–EXL1#2	
G1106	MI8#2	MI7#2	MI6#2	MI5#2	MI4#2	MI3#2	MI2#2	MI1#2	
G1107									
G1108	MLK8#2	MLK7#2	MLK6#2	MLK5#2	MLK4#2	MLK3#2	MLK2#2	MLK1#2	
G1109									
G1110		+LM7 #2	+LM6 #2	+LM5 #2	+LM4 #2	+LM3 #2	+LM2 #2	+LM1 #2	
G1111									
G1112		–LM7 #2	–LM6 #2	–LM5 #2	–LM4 #2	–LM3 #2	–LM2 #2	–LM1 #2	
G1113									
G1114	*+L8#2	*+L7#2	*+L6#2	*+L5#2	*+L4#2	*+L3#2	*+L2#2	*+L1#2	
G1115									
G1116	*–L8#2	*–L7#2	*–L6#2	*–L5#2	*–L4#2	*–L3#2	*–L2#2	*–L1#2	
G1117									
G1118	*+ED8#2	*+ED7#2	*+ED6#2	*+ED5#2	*+ED4#2	*+ED3#2	*+ED2#2	*+ED1#2	
G1119									
G1120	*–ED8#2	*–ED7#2	*–ED6#2	*–ED5#2	*–ED4#2	*–ED3#2	*–ED2#2	*–ED1#2	
G1121									
G1122	PKESS2#2	PK7#2 / PKESS1#2	PK6 #2	PK5 #2	PK4 #2	PK3 #2	PK2 #2	PK1 #2	(T series)
	PKESS2#2	PKESS1#2							(M series)
G1123									

	#7	#6	#5	#4	#3	#2	#1	#0
G1124	DTCH8#2	DTCH7#2	DTCH6#2	DTCH5#2	DTCH4#2	DTCH3#2	DTCH2#2	DTCH1#2
G1125	IUDD8#2	IUDD7#2	IUDD6#2	IUDD5#2	IUDD4#2	IUDD3#2	IUDD2#2	IUDD1#2
G1126	SVF8#2	SVF7#2	SVF6#2	SVF5#2	SVF4#2	SVF3#2	SVF2#2	SVF1#2
G1127								
G1128								
G1129								
G1130	*IT8#2	*IT7#2	*IT6#2	*IT5#2	*IT4#2	*IT3#2	*IT2#2	*IT1#2
G1131								
G1132					+MIT4 #2	+MIT3#2	+MIT2 #2	+MIT1 #2
G1133								
G1134					–MIT4 #2	–MIT3 #2	–MIT2 #2	–MIT1 #2
G1135								
G1136	EAX8#2	EAX7#2	EAX6#2	EAX5#2	EAX4#2	EAX3#2	EAX2#2	EAX1#2
G1137								
G1138	SYNC8#2	SYNC7#2	SYNC6#2	SYNC5#2	SYNC4#2	SYNC3#2	SYNC2#2	SYNC1#2
G1139								
G1140		SYNCJ7#2	SYNCJ6#2	SYNCJ5#2	SYNCJ4#2	SYNCJ3#2	SYNCJ2#2	SYNCJ1#2
G1141								
G1142	EBUFA#2	ECLRA#2	ESTPA#2	ESOFA#2	ESBKA#2	EMBUFA#2	ELCKZA#2	EFINA#2
G1143	EMSBKA#2	EC6A#2	EC5A#2	EC4A#2	EC3A#2	EC2A#2	EC1A#2	EC0A#2
G1144	EIF7A#2	EIF6A#2	EIF5A#2	EIF4A#2	EIF3A#2	EIF2A#2	EIF1A#2	EIF0A#2
G1145	EIF15A#2	EIF14A#2	EIF13A#2	EIF12A#2	EIF11A#2	EIF10A#2	EIF9A#2	EIF8A#2
G1146	EID7A#2	EID6A#2	EID5A#2	EID4A#2	EID3A#2	EID2A#2	EID1A#2	EID0A#2
G1147	EID15A#2	EID14A#2	EID13A#2	EID12A#2	EID11A#2	EID10A#2	EID9A#2	EID8A#2
G1148	EID23A#2	EID22A#2	EID21A#2	EID20A#2	EID19A#2	EID18A#2	EID17A#2	EID16A#2

	#7	#6	#5	#4	#3	#2	#1	#0
G1149	EID31A#2	EID30A#2	EID29A#2	EID28A#2	EID27A#2	EID26A#2	EID25A#2	EID24A#2
G1150	DRNE#2	RTE#2	OVCE#2				ROV2E#2	ROV1E#2
G1151	*FV7E#2	*FV6E#2	*FV5E#2	*FV4E#2	*FV3E#2	*FV2E#2	*FV1E#2	*FV0E#2
G1152								
G1153								
G1154	EBUFB#2	ECLRB#2	ESTPB#2	ESOFB#2	ESBKB#2	EMBUFB#2	ELCKZB#2	EFINB#2
G1155	EMSBKB#2	EC6B#2	EC5B#2	EC4B#2	EC3B#2	EC2B#2	EC1B#2	EC0B#2
G1156	EIF7B#2	EIF6B#2	EIF5B#2	EIF4B#2	EIF3B#2	EIF2B#2	EIF1B#2	EIF0B#2
G1157	EIF15B#2	EIF14B#2	EIF13B#2	EIF12B#2	EIF11B#2	EIF10B#2	EIF9B#2	EIF8B#2
G1158	EID7B#2	EID6B#2	EID5B#2	EID4B#2	EID3B#2	EID2B#2	EID1B#2	EID0B#2
G1159	EID15B#2	EID14B#2	EID13B#2	EID12B#2	EID11B#2	EID10B#2	EID9B#2	EID8B#2
G1160	EID23B#2	EID22B#2	EID21B#2	EID20B#2	EID19B#2	EID18B#2	EID17B#2	EID16B#2
G1161	EID31B#2	EID30B#2	EID29B#2	EID28B#2	EID27B#2	EID26B#2	EID25B#2	EID24B#2
G1162								
G1163								
G1164								
G1165								
G1166	EBUFC#2	ECLRC#2	ESTPC#2	ESOFC#2	ESBKC#2	EMBUFC#2	ELCKZC#2	EFINC#2
G1167	EMSBKC#2	EC6C#2	EC5C#2	EC4C#2	EC3C#2	EC2C#2	EC1C#2	EC0C#2
G1168	EIF7C#2	EIF6C#2	EIF5C#2	EIF4C#2	EIF3C#2	EIF2C#2	EIF1C#2	EIF0C#2
G1169	EIF15C#2	EIF14C#2	EIF13C#2	EIF12C#2	EIF11C#2	EIF10C#2	EIF9C#2	EIF8C#2
G1170	EID7C#2	EID6C#2	EID5C#2	EID4C#2	EID3C#2	EID2C#2	EID1C#2	EID0C#2
G1171	EID15C#2	EID14C#2	EID13C#2	EID12C#2	EID11C#2	EID10C#2	EID9C#2	EID8C#2
G1172	EID23C#2	EID22C#2	EID21C#2	EID20C#2	EID19C#2	EID18C#2	EID17C#2	EID16C#2
G1173	EID31C#2	EID30C#2	EID29C#2	EID28C#2	EID27C#2	EID26C#2	EID25C#2	EID24C#2

	#7	#6	#5	#4	#3	#2	#1	#0
G1174								
G1175								
G1176								
G1177								
G1178	EBUFD#2	ECLRD#2	ESTPD#2	ESOFD#2	ESBKD#2	EMBUFD#2	ELCKZD#2	EFIND#2
G1179	EMSBKD#2	EC6D#2	EC5D#2	EC4D#2	EC3D#2	EC2D#2	EC1D#2	EC0D#2
G1180	EIF7D#2	EIF6D#2	EIF5D#2	EIF4D#2	EIF3D#2	EIF2D#2	EIF1D#2	EIF0D#2
G1181	EIF15D#2	EIF14D#2	EIF13D#2	EIF12D#2	EIF11D#2	EIF10D#2	EIF9D#2	EIF8D#2
G1182	EID7D#2	EID6D#2	EID5D#2	EID4D#2	EID3D#2	EID2D#2	EID1D#2	EID0D#2
G1183	EID15D#2	EID14D#2	EID13D#2	EID12D#2	EID11D#2	EID10D#2	EID9D#2	EID8D#2
G1184	EID23D#2	EID22D#2	EID21D#2	EID20D#2	EID19D#2	EID18D#2	EID17D#2	EID16D#2
G1185	EID31D#2	EID30D#2	EID29D#2	EID28D#2	EID27D#2	EID26D#2	EID25D#2	EID24D#2
G1186								
G1187								
G1188								
G1189								
G1190	OVLS8#2	OVLS7#2	OVLS6#2	OVLS5#2	OVLS4#2	OVLS3#2	OVLS2#2	OVLS1#2
G1191								
G1192	IGVRY8#2	IGVRY7#2	IGVRY6#2	IGVRY5#2	IGVRY4#2	IGVRY3#2	IGVRY2#2	IGVRY1#2
G1193								
G1194								
G1195								
G1196								
G1197								
G1198	NPOS8#2	NPOS7#2	NPOS6#2	NPOS5#2	NPOS4#2	NPOS3#2	NPOS2#2	NPOS1#2

	#7	#6	#5	#4	#3	#2	#1	#0
G1199								
G1200	EASIP8#2	EASIP7#2	EASIP6#2	EASIP5#2	EASIP4#2	EASIP3#2	EASIP2#2	EASIP1#2
G1201								
G1202								
G1203								
G1204	MRDYC#2	ORCMC#2	SFRC#2	SRVC#2	CTH1C#2	CTH2C#2	TLMHC#2	TLMLC#2
G1205	RCHC#2	RSLC#2	INTGC#2	SOCNC#2	MCFNC#2	SPSLC#2	*ESPC#2	ARSTC#2
G1206	RCHHGC#2	MFNHGC#2	INCMDC#2	OVRC#2	DEFMDC#2	NRROC#2	ROTBC#2	INDXC#2
G1207				DSCNC#2	SORSLC#2	MPOFC#2	SLVC#2	MORCMC#2
G1208								
G1209								
G1210								
G1211								
G1212								
G1213								
G1214								
G1215								
G1216								
G1217								
G1218								
G1219								
G1220								
G1221								
G1222								
G1223								

	#7	#6	#5	#4	#3	#2	#1	#0
G1224								
G1225								
G1226								
G1227								
G1228								
G1229								
G1230								
G1231								
G1232								
G1233								
G1234								
G1235								
G1236								
G1237								
G1238								
G1239								
G1240								
G1241								
G1242								
G1243								
G1244								
G1245								
G1246								
G1247								
G1248								

	#7	#6	#5	#4	#3	#2	#1	#0
G1249								
G1250								
G1251								
G1252								
G1253								
G1254								
G1255								
G1256								
G1257								
G1258								
G1259								
G1260								
G1261								
G1262								
G1263								
G1264								
G1265								
G1266	MRDYD#2	ORCMD#2	SFRD#2	SRVD#2	CTH1D#2	CTH2D#2	TLMHD#2	TLMLD#2
G1267	RCHD#2	RSLD#2	INTGD#2	SOCND#2	MCFND#2	SPSLD#2	*ESPD#2	ARSTD#2
G1268	RCHHGD#2	MFNHGD#2	INCMDD#2	OVRD#2	DEFMDD#2	NRROD#2	ROTBD#2	INDXD#2
G1269				DSCND#2	SORSLD#2	MPOFD#2	SLVD#2	MORCMD#2
G1270	SHD07#2	SHD06#2	SHD05#2	SHD04#2	SHD03#2	SHD02#2	SHD01#2	SHD00#2
G1271					SHD11#2	SHD10#2	SHD09#2	SHD08#2
G1272	R08I4#2	R07I4#2	R06I4#2	R05I4#2	R04I4#2	R03I4#2	R02I4#2	R01I4#2
G1273	SIND4#2	SSIN4#2	SGN4#2		R12I4#2	R11I4#2	R10I4#2	R09I4#2

	#7	#6	#5	#4	#3	#2	#1	#0
G1274								
G1275								
G1276								
G1277								
G1278								
G1279								
G1280								
G1281								
G1282								
G1283								
G1284								
G1285								
G1286								
G1287								
G1288								
G1289								
G1290								
G1291								
G1292	ITCD[#2]							
G1293								
G1294								
G1295								
G1296								
G1297								
G1298								

	#7	#6	#5	#4	#3	#2	#1	#0
G1299								
G1300								
G1301								
G1302								
G1303								
G1304								
G1305								
G1306								
G1307								
G1308								
G1309								
G1310								
G1311								
G1312								
G1313								
G1314								
G1315								
G1316								
G1317								
G1318								
G1319								

CNC Path 1 → PMC

Address	Bit number							
	#7	#6	#5	#4	#3	#2	#1	#0
F000	OP#1	SA#1	STL#1	SPL#1				RWD#1
F001	MA#1		TAP#1	ENB#1	DEN#1	BAL#1	RST#1	AL#1
F002	MDRN#1	CUT#1		SRNMV#1	THRD#1	CSS#1	RPDO#1	INCH#1
F003	MTCHIN#1	MEDT#1	MMEM#1	MRMT#1	MMDI#1	MJ#1	MH#1	MINC#1
F004			MREF#1	MAFL#1	MSBK#1	MABSM#1	MMLK#1	MBDT1#1
F005	MBDT9#1	MBDT8#1	MBDT7#1	MBDT6#1	MBDT5#1	MBDT4#1	MBDT3#1	MBDT2#1
F006								
F007	BF#1			BF#1	TF#1	SF#1	EFD#1	MF#1
F008			MF3#1	MF2#1				EF#1
F009	DM00#1	DM01#1	DM02#1	DM30#1				
F010	M07#1	M06#1	M05#1	M04#1	M03#1	M02#1	M01#1	M00#1
F011	M15#1	M14#1	M13#1	M12#1	M11#1	M10#1	M09#1	M08#1
F012	M23#1	M22#1	M21#1	M20#1	M19#1	M18#1	M17#1	M16#1
F013	M31#1	M30#1	M29#1	M28#1	M27#1	M26#1	M25#1	M24#1
F014	M207#1	M206#1	M205#1	M204#1	M203#1	M202#1	M201#1	M200#1
F015	M215#1	M214#1	M213#1	M212#1	M211#1	M210#1	M209#1	M208#1
F016	M307#1	M306#1	M305#1	M304#1	M303#1	M302#1	M301#1	M300#1
F017	M315#1	M314#1	M313#1	M312#1	M311#1	M310#1	M309#1	M308#1
F018								
F019								
F020								
F021								
F022	S07#1	S06#1	S05#1	S04#1	S03#1	S02#1	S01#1	S00#1
F023	S15#1	S14#1	S13#1	S12#1	S11#1	S10#1	S09#1	S08#1
F024	S23#1	S22#1	S21#1	S20#1	S19#1	S18#1	S17#1	S16#1

	#7	#6	#5	#4	#3	#2	#1	#0
F025	S31[#1]	S30[#1]	S29[#1]	S28[#1]	S27[#1]	S26[#1]	S25[#1]	S24[#1]
F026	T07[#1]	T06[#1]	T05[#1]	T04[#1]	T03[#1]	T02[#1]	T01[#1]	T00[#1]
F027	T15[#1]	T14[#1]	T13[#1]	T12[#1]	T11[#1]	T10[#1]	T09[#1]	T08[#1]
F028	T23[#1]	T22[#1]	T21[#1]	T20[#1]	T19[#1]	T18[#1]	T17[#1]	T16[#1]
F029	T31[#1]	T30[#1]	T29[#1]	T28[#1]	T27[#1]	T26[#1]	T25[#1]	T24[#1]
F030	B07[#1]	B06[#1]	B05[#1]	B04[#1]	B03[#1]	B02[#1]	B01[#1]	B00[#1]
F031	B15[#1]	B14[#1]	B13[#1]	B12[#1]	B11[#1]	B10[#1]	B09[#1]	B08[#1]
F032	B23[#1]	B22[#1]	B21[#1]	B20[#1]	B19[#1]	B18[#1]	B17[#1]	B16[#1]
F033	B31[#1]	B30[#1]	B29[#1]	B28[#1]	B27[#1]	B26[#1]	B25[#1]	B24[#1]
F034						GR3O[#1]	GR2O[#1]	GR1O[#1]
F035								SPAL[#1]
F036	R08O[#1]	R07O[#1]	R06O[#1]	R05O[#1]	R04O[#1]	R03O[#1]	R02O[#1]	R01O[#1]
F037					R12O[#1]	R11O[#1]	R10O[#1]	R09O[#1]
F038					ENB3[#1]	ENB2[#1]	SUCLP[#1]	SCLP[#1]
F039					CHPCYL[#1]	CHPMD[#1]	ENB4[#1]	
F040	AR7[#1]	AR6[#1]	AR5[#1]	AR4[#1]	AR3[#1]	AR2[#1]	AR1[#1]	AR0[#1]
F041	AR15[#1]	AR14[#1]	AR13[#1]	AR12[#1]	AR11[#1]	AR10[#1]	AR09[#1]	AR08[#1]
F042								
F043								
F044				SYCAL / SYCAL [#1]	FSPPH / FSPPH [#1]	FSPSY / FSPSY [#1]	FSCSL[#1]	
F045	ORARA[#1]	TLMA[#1]	LDT2A[#1]	LDT1A[#1]	SARA[#1]	SDTA[#1]	SSTA[#1]	ALMA[#1]
F046	MORA2A[#1]	MORA1A[#1]	PORA2A[#1]	SLVSA[#1]	RCFNA[#1]	RCHPA[#1]	CFINA[#1]	CHPA[#1]
F047				EXOFA[#1]	SORENA[#1]	MSOVRA[#1]	INCSTA[#1]	PC1DTA[#1]
F048								
F049	ORARB[#1]	TLMB[#1]	LDT2B[#1]	LDT1B[#1]	SARB[#1]	SDTB[#1]	SSTB[#1]	ALMB[#1]

	#7	#6	#5	#4	#3	#2	#1	#0
F050	MORA2B#1	MORA1B#1	PORA2B#1	SLVSB#1	RCFNB#1	RCHPB#1	CFINB#1	CHPB#1
F051				EXOFB#1	SORENB#1	MSOVRB#1	INCSTB#1	PC1DTB#1
F052								
F053	EKENB			BGEACT#1	RPALM#1	RPBSY#1	PRGDPL	INHKY
F054	UO007#1	UO006#1	UO005#1	UO004#1	UO003#1	UO002#1	UO001#1	UO000#1
F055	UO015#1	UO014#1	UO013#1	UO012#1	UO011#1	UO010#1	UO009#1	UO008#1
F056	UO107#1	UO106#1	UO105#1	UO104#1	UO103#1	UO102#1	UO101#1	UO100#1
F057	UO115#1	UO114#1	UO11□#1	UO112#1	UO111#1	UO110#1	UO109#1	UO108#1
F058	UO123#1	UO122#1	UO121#1	UO120#1	UO119#1	UO118#1	UO117#1	UO116#1
F059	UO131#1	UO130#1	UO129#1	UO128#1	UO127#1	UO126#1	UO125#1	UO124#1
F060						ESCAN#1	ESEND#1	EREND#1
F061							BCLP#1	BUCLP#1
F062	PRTSF#1			S2MES#1	S1MES#1			
F063	PSYN#1	WATO#1				PSAR#1	PSE2#1	PSE1#1
F064	TIALM	TICHK	COSP			TLCHI#1	TLNW#1	TLCH#1
F065	HOBSYN#1	SYNMOD#1	MSPCF#1	RTRCTF#1			RGSPM#1	RGSPP#1
F066			PECK2#1				RTPT#1	G08MD#1
F067								
F068								
F069								
F070	PSW08#1	PSW07#1	PSW06#1	PSW05#1	PSW04#1	PSW03#1	PSW02#1	PSW01#1
F071	PSW16#1	PSW15#1	PSW14#1	PSW13#1	PSW12#1	PSW11#1	PSW10#1	PSW09#1
F072	OUT7#1	OUT6#1	OUT5#1	OUT4#1	OUT3#1	OUT2#1	OUT1#1	OUT0#1
F073				ZRNO#1		MD4O#1	MD2O#1	MD1O#1
F074								

	#7	#6	#5	#4	#3	#2	#1	#0
F075	SPO#1	KEYO#1	DRNO#1	MLKO#1	SBKO#1	BDTO#1		
F076			ROV2O#1	ROV1O#1	RTAP#1		MP2O#1	MP1O#1
F077		RTO#1			HS1DO#1	HS1CO#1	HS1BO#1	HS1AO#1
F078	*FV7O#1	*FV6O#1	*FV5O#1	*FV4O#1	*FV3O#1	*FV2O#1	*FV1O#1	*FV0O#1
F079	*JV7O#1	*JV6O#1	*JV5O#1	*JV4O#1	*JV3O#1	*JV2O#1	*JV1O#1	*JV0O#1
F080	*FV15O#1	*FV14O#1	*FV13O#1	*FV12O#1	*FV11O#1	*FV10O#1	*FV9O#1	*FV8O#1
F081	–J4O#1	+J4O#1	–J3O#1	+J3O#1	–J2O#1	+J2O#1	–J1O#1	+J1O#1
F082						RVSL#1		
F083								
F084								
F085								
F086								
F087								
F088								
F089								
F090						ABTSP2#1	ABTSP1#1	ABTQSV#1
F091								
F092			TRSPS#1		TRACT#1			
F093								
F094	ZP8#1	ZP7#1	ZP6#1	ZP5#1	ZP4#1	ZP3#1	ZP2#1	ZP1#1
F095								
F096	ZP28#1	ZP27#1	ZP26#1	ZP25#1	ZP24#1	ZP23#1	ZP22#1	ZP21#1
F097								
F098	ZP38#1	ZP37#1	ZP36#1	ZP35#1	ZP34#1	ZP33#1	ZP32#1	ZP31#1
F099								

	#7	#6	#5	#4	#3	#2	#1	#0
F100	ZP48#1	ZP47#1	ZP46#1	ZP45#1	ZP44#1	ZP43#1	ZP42#1	ZP41#1
F101								
F102	MV8#1	MV7#1	MV6#1	MV5#1	MV4#1	MV3#1	MV2#1	MV1#1
F103								
F104	INP8#1	INP7#1	INP6#1	INP5#1	INP4#1	INP3#1	INP2#1	INP1#1
F105								
F106	MVD8#1	MVD7#1	MVD6#1	MVD5#1	MVD4#1	MVD3#1	MVD2#1	MVD1#1
F107								
F108	MMI8#1	MMI7#1	MMI6#1	MMI5#1	MMI4#1	MMI3#1	MMI2#1	MMI1#1
F109								
F110	MDTCH8#1	MDTCH7#1	MDTCH6#1	MDTCH5#1	MDTCH4#1	MDTCH3#1	MDTCH2#1	MDTCH1#1
F111								
F112	EADEN8#1	EADEN7#1	EADEN6#1	EADEN5#1	EADEN4#1	EADEN3#1	EADEN2#1	EADEN1#1
F113								
F114	TRQL8#1	TRQL7#1	TRQL6#1	TRQL5#1	TRQL4#1	TRQL3#1	TRQL2#1	TRQL1#1
F115								
F116	FRP8#1	FRP7#1	FRP6#1	FRP5#1	FRP4#1	FRP3#1	FRP2#1	FRP1#1
F117								
F118	SYN8O#1	SYN7O#1	SYN6O#1	SYN5O#1	SYN4O#1	SYN3O#1	SYN2O#1	SYN1O#1
F119								
F120	ZRF8#1	ZRF7#1	ZRF6#1	ZRF5#1	ZRF4#1	ZRF3#1	ZRF2#1	ZRF1#1
F121								
F122	HDO7#1	HDO6#1	HDO5#1	HDO4#1	HDO3#1	HDO2#1	HDO1#1	HDO0#1
F123								
F124		+OT7#1	+OT6#1	+OT5#1	+OT4#1	+OT3#1	+OT2#1	+OT4#1

	#7	#6	#5	#4	#3	#2	#1	#0
F125								
F126		–OT7[#1]	–OT6[#1]	–OT5[#1]	–OT4[#1]	–OT3[#1]	–OT2[#1]	–OT4[#1]
F127								
F128								
F129	*EAXSL[#1]		EOV0[#1]					
F130	EBSYA[#1]	EOTNA[#1]	EOTPA[#1]	EGENA[#1]	EDENA[#1]	EIALA[#1]	ECKZA[#1]	EINPA[#1]
F131							EABUFA[#1]	EMFA[#1]
F132	EM28A[#1]	EM24A[#1]	EM22A[#1]	EM21A[#1]	EM18A[#1]	EM14A[#1]	EM12A[#1]	EM11A[#1]
F133	EBSYB[#1]	EOTNB[#1]	EOTPB[#1]	EGENB[#1]	EDENB[#1]	EIALB[#1]	ECKZB[#1]	EINPB[#1]
F134							EABUFB[#1]	EMFB[#1]
F135	EM28B[#1]	EM24B[#1]	EM22B[#1]	EM21B[#1]	EM18B[#1]	EM14B[#1]	EM12B[#1]	EM11B[#1]
F136	EBSYC[#1]	EOTNC[#1]	EOTPC[#1]	EGENC[#1]	EDENC[#1]	EIALC[#1]	ECKZC[#1]	EINPC[#1]
F137							EABUFC[#1]	EMFC[#1]
F138	EM28C[#1]	EM24C[#1]	EM22C[#1]	EM21C[#1]	EM18C[#1]	EM14C[#1]	EM12C[#1]	EM11C[#1]
F139	EBSYD[#1]	EOTND[#1]	EOTPD[#1]	EGEND[#1]	EDEND[#1]	EIALD[#1]	ECKZD[#1]	EINPD[#1]
F140							EABUFD[#1]	EMFD[#1]
F141	EM28D[#1]	EM24D[#1]	EM22D[#1]	EM21D[#1]	EM18D[#1]	EM14D[#1]	EM12D[#1]	EM11D[#1]
F142	EM48A[#1]	EM44A[#1]	EM42A[#1]	EM41A[#1]	EM38A[#1]	EM34A[#1]	EM32A[#1]	EM31A[#1]
F143								
F144								
F145	EM48B[#1]	EM44B[#1]	EM42B[#1]	EM41B[#1]	EM38B[#1]	EM34B[#1]	EM32B[#1]	EM31B[#1]
F146								
F147								
F148	EM48C[#1]	EM44C[#1]	EM42C[#1]	EM41C[#1]	EM38C[#1]	EM34C[#1]	EM32C[#1]	EM31C[#1]
F149								

	#7	#6	#5	#4	#3	#2	#1	#0
F150								
F151	EM48D#1	EM44D#1	EM42D#1	EM41D#1	EM38D#1	EM34D#1	EM32D#1	EM31D#1
F152								
F153								
F154								
F155								
F156								
F157								
F158								
F159								
F160								
F161								
F162								
F163								
F164								
F165								
F166								
F167								
F168	ORARC#1	TLMC#1	LDT2C#1	LDT1C#1	SARC#1	SDTC#1	SSTC#1	ALMC#1
F169	MORA2C#1	MORA1C#1	PORA2C#1	SLVSC#1	RCFNC#1	RCHPC#1	CFINC#1	CHPC#1
F170				EXOFC#1	SORENC#1	MSOVRC#1	INCSTC#1	PC1DTC#1
F171								
F172	PBATL#1	PBATZ#1						
F173								
F174								

	#7	#6	#5	#4	#3	#2	#1	#0
F175								
F176								
F177	EDGN#1	EPARM#1	EVAR#1	EPRG#1	EWTIO#1	ESTPIO#1	ERDIO#1	IOLNK#1
F178					SRLNO3#1	SRLNO2#1	SRLNO1#1	SRLNO0#1
F179								
F180	CLRCH8#1	CLRCH7#1	CLRCH6#1	CLRCH5#1	CLRCH4#1	CLRCH3#1	CLRCH2#1	CLRCH1#1
F181								
F182	EACNT8#1	EACNT7#1	EACNT6#1	EACNT5#1	EACNT4#1	EACNT3#1	EACNT2#1	EACNT1#1
F183								
F184								
F185								
F186								
F187								
F188								
F189								
F190								
F191								
F192								
F193								
F194								
F195								
F196								
F197								
F198								
F199								

	#7	#6	#5	#4	#3	#2	#1	#0
F200								
F201								
F202								
F203								
F204								
F205								
F206								
F207								
F208								
F209								
F210								
F211								
F212								
F213								
F214								
F215								
F216								
F217								
F218								
F219								
F220								
F221								
F222								
F223								
F224								

	#7	#6	#5	#4	#3	#2	#1	#0
F225								
F226								
F227								
F228								
F229								
F230								
F231								
F232								
F233								
F234								
F235								
F236								
F237								
F238								
F239								
F240								
F241								
F242								
F243								
F244								
F245								
F246								
F247								
F248								
F249								

	#7	#6	#5	#4	#3	#2	#1	#0
F250								
F251								
F252								
F253								
F254								
F255								
F256								
F257								
F258								
F259								
F260								
F261								
F262								
F263	SPWRN8#1	SPWRN7#1	SPWRN6#1	SPWRN5#1	SPWRN4#1	SPWRN3#1	SPWRN2#1	SPWRN1#1
F264								SPWRN9#1
F265								
F266	ORARD#1	TLMD#1	LDT2D#1	LDT1D#1	SARD#1	SDTD#1	SSTD#1	ALMD#1
F267	MORA2D#1	MORA1D#1	PORA2D#1	SLVSD#1	RCFND#1	RCHPD#1	CFIND#1	CHPD#1
F268				EXOFD#1	SOREND#1	MSOVRD#1	INCSTD#1	PC1DTD#1
F269								
F270								
F271								
F272								
F273								
F274								

	#7	#6	#5	#4	#3	#2	#1	#0
F275								
F276								
F277								
F278								
F279								
F280								
F281								
F282								
F283								
F284								
F285								
F286								
F287								
F288								
F289								
F290								
F291								
F292								
F293								
F294								
F295								
F296								
F297								
F298								
F299								

	#7	#6	#5	#4	#3	#2	#1	#0
F300								
F301								
F302								
F303								
F304								
F305								
F306								
F307								
F308								
F309								
F310								
F311								
F312								
F313								
F314								
F315								

CNC Path 2 → PMC

Address	Bit number							
	#7	#6	#5	#4	#3	#2	#1	#0
F1000	OP#2	SA#2	STL#2	SPL#2				RWD#2
F1001	MA#2		TAP#2	ENB#2	DEN#2	BAL#2	RST#2	AL#2
F1002	MDRN#2	CUT#2		SRNMV#2	THRD#2	CSS#2	RPDO#2	INCH#2
F1003	MTCHIN#2	MEDT#2	MMEM#2	MRMT#2	MMDI#2	MJ#2	MH#2	MINC#2
F1004			MREF#2	MAFL#2	MSBK#2	MABSM#1	MMLK#2	MBDT1#2
F1005	MBDT9#2	MBDT8#2	MBDT7#2	MBDT6#2	MBDT5#2	MBDT4#2	MBDT3#2	MBDT2#2
F1006								
F1007	BF#2			BF#2	TF#2	SF#2	EFD#2	MF#2
F1008			MF3#2	MF2#2				EF#2
F1009	DM00#2	DM01#2	DM02#2	DM30#2				
F010	M07#2	M06#2	M05#2	M04#2	M03#2	M02#2	M01#2	M00#2
F1011	M15#2	M14#2	M13#2	M12#2	M11#2	M10#2	M09#2	M08#2
F1012	M23#2	M22#2	M21#2	M20#2	M19#2	M18#2	M17#2	M16#2
F1013	M31#2	M30#2	M29#2	M28#2	M27#2	M26#2	M25#2	M24#2
F1014	M207#2	M206#2	M205#2	M204#2	M203#2	M202#2	M201#2	M200#2
F1015	M215#2	M214#2	M213#2	M212#2	M211#2	M210#2	M209#2	M208#2
F1016	M307#2	M306#2	M305#2	M304#2	M303#2	M302#2	M301#2	M300#2
F1017	M315#2	M314#2	M313#2	M312#2	M311#2	M310#2	M309#2	M308#2
F1018								
F1019								
F1020								
F1021								
F1022	S07#2	S06#2	S05#2	S04#2	S03#2	S02#2	S01#2	S00#2
F1023	S15#2	S14#2	S13#2	S12#2	S11#2	S10#2	S09#2	S08#2
F1024	S23#2	S22#2	S21#2	S20#2	S19#2	S18#2	S17#2	S16#2

	#7	#6	#5	#4	#3	#2	#1	#0
F1025	S31#2	S30#2	S29#2	S28#2	S27#2	S26#2	S25#2	S24#2
F1026	T07#2	T06#2	T05#2	T04#2	T03#2	T02#2	T01#2	T00#2
F1027	T15#2	T14#2	T13#2	T12#2	T11#2	T10#2	T09#2	T08#2
F1028	T23#2	T22#2	T21#2	T20#2	T19#2	T18#2	T17#2	T16#2
F1029	T31#2	T30#2	T29#2	T28#2	T27#2	T26#2	T25#2	T24#2
F1030	B07#2	B06#2	B05#2	B04#2	B03#2	B02#2	B01#2	B00#2
F1031	B15#2	B14#2	B13#2	B12#2	B11#2	B10#2	B09#2	B08#2
F1032	B23#2	B22#2	B21#2	B20#2	B19#2	B18#2	B17#2	B16#2
F1033	B31#2	B30#2	B29#2	B28#2	B27#2	B26#2	B25#2	B24#2
F1034						GR3O#2	GR2O#2	GR1O#2
F1035								SPAL#2
F1036	R08O#2	R07O#2	R06O#2	R05O#2	R04O#2	R03O#2	R02O#2	R01O#2
F1037					R12O#2	R11O#2	R10O#2	R09O#2
F1038					ENB3#2	ENB2#2	SUCLP#2	SCLP#2
F1039					CHPCYL#2	CHPMD#2	ENB4#2	
F1040	AR7#2	AR6#2	AR5#2	AR4#2	AR3#2	AR2#2	AR1#2	AR0#2
F1041	AR15#2	AR14#2	AR13#2	AR12#2	AR11#2	AR10#2	AR09#2	AR08#2
F1042								
F1043								
F1044					FSPPH#2	FSPSY#2	FSCSL#2	
F1045	ORARA#2	TLMA#2	LDT2A#2	LDT1A#2	SARA#2	SDTA#2	SSTA#2	ALMA#2
F1046	MORA2A#2	MORA1A#2	PORA2A#2	SLVSA#2	RCFNA#2	RCHPA#2	CFINA#2	CHPA#2
F1047				EXOFA#2	SORENA#2	MSOVRA#2	INCSTA#2	PC1DTA#2
F1048								
F1049	ORARB#2	TLMB#2	LDT2B#2	LDT1B#2	SARB#2	SDTB#2	SSTB#2	ALMB#2

	#7	#6	#5	#4	#3	#2	#1	#0
F1050	MORA2B#2	MORA1B#2	PORA2B#2	SLVSB#2	RCFNB#2	RCHPB#2	CFINB#2	CHPB#2
F1051				EXOFB#2	SORENB#2	MSOVRB#2	INCSTB#2	PC1DTB#2
F1052								
F1053				BGEACT#2	RPALM#2	RPBSY#2		
F1054	UO007#2	UO006#2	UO005#2	UO004#2	UO003#2	UO002#2	UO001#2	UO000#2
F1055	UO015#2	UO014#2	UO013#2	UO012#2	UO011#2	UO010#2	UO009#2	UO008#2
F1056	UO107#2	UO106#2	UO105#2	UO104#2	UO103#2	UO102#2	UO101#2	UO100#2
F1057	UO115#2	UO114#2	UO113#2	UO112#2	UO111#2	UO110#2	UO109#2	UO108#2
F1058	UO123#2	UO122#2	UO121#2	UO120#2	UO119#2	UO118#2	UO117#2	UO116#2
F1059	UO131#2	UO130#2	UO129#2	UO128#2	UO127#2	UO126#2	UO125#2	UO124#2
F1060						ESCAN#2	ESEND#2	EREND#2
F1061							BCLP#2	BUCLP#2
F1062	PRTSF#2			S2MES#2	S1MES#2			
F1063	PSYN#2	WATO#2				PSAR#2	PSE2#2	PSE1#2
F1064						TLCHI#2	TLNW#2	TLCH#2
F1065	HOBSYN#2	SYNMOD#2	MSPCF#2	RTRCTF#2			RGSPM#2	RGSPP#2
F1066			PECK2#2				RTPT#2	G08MD#2
F1067								
F1068								
F1069								
F1070	PSW08#2	PSW07#2	PSW06#2	PSW05#2	PSW04#2	PSW03#2	PSW02#2	PSW01#2
F1071	PSW16#2	PSW15#2	PSW14#2	PSW13#2	PSW12#2	PSW11#2	PSW10#2	PSW09#2
F1072	OUT7#2	OUT6#2	OUT5#2	OUT4#2	OUT3#2	OUT2#2	OUT1#2	OUT0#2
F1073				ZRNO#2		MD4O#2	MD2O#2	MD1O#2
F1074								

	#7	#6	#5	#4	#3	#2	#1	#0
F1075	SPO#2	KEYO#2	DRNO#2	MLKO#2	SBKO#2	BDTO#2		
F1076			ROV2O#2	ROV1O#2	RTAP#2		MP2O#2	MP1O#2
F1077		RTO#2			HS1DO#2	HS1CO#2	HS1BO#2	HS1AO#2
F1078	*FV7O#2	*FV6O#2	*FV5O#2	*FV4O#2	*FV3O#2	*FV2O#2	*FV1O#2	*FV0O#2
F1079	*JV7O#2	*JV6O#2	*JV5O#2	*JV4O#2	*JV3O#2	*JV2O#2	*JV1O#2	*JV0O#2
F1080	*FV15O#2	*FV14O#2	*FV13O#2	*FV12O#2	*FV11O#2	*FV10O#2	*FV09O#2	*FV08O#2
F1081	–J4O#2	+J4O#2	–J3O#2	+J3O#2	–J2O#2	+J2O#2	–J1O#2	+J1O#2
F1082						RVSL#2		
F1083								
F1084								
F1085								
F1086								
F1087								
F1088								
F1089								
F1090						ABTSP2#2	ABTSP1#2	ABTQSV#2
F1091								
F1092			TRSPS#2		TRACT#2			
F1093								
F1094	ZP8#2	ZP7#2	ZP6#2	ZP5#2	ZP4#2	ZP3#2	ZP2#2	ZP1#2
F1095								
F1096	ZP28#2	ZP27#2	ZP26#2	ZP25#2	ZP24#2	ZP23#2	ZP22#2	ZP21#2
F1097								
F1098	ZP38#2	ZP37#2	ZP36#2	ZP35#2	ZP34#2	ZP33#2	ZP32#2	ZP31#2
F1099								

	#7	#6	#5	#4	#3	#2	#1	#0
F1100	ZP48#2	ZP47#2	ZP46#2	ZP45#2	ZP44#2	ZP43#2	ZP42#2	ZP41#2
F1101								
F1102	MV8#2	MV7#2	MV6#2	MV5#2	MV4#2	MV3#2	MV2#2	MV1#2
F1103								
F1104	INP8#2	INP7#2	INP6#2	INP5#2	INP4#2	INP3#2	INP2#2	INP1#2
F1105								
F1106	MVD8#2	MVD7#2	MVD6#2	MVD5#2	MVD4#2	MVD3#2	MVD2#2	MVD1#2
F1107								
F1108	MMI8#2	MMI7#2	MMI6#2	MMI5#2	MMI4#2	MMI3#2	MMI2#2	MMI1#2
F1109								
F1110	MDTCH8#2	MDTCH7#2	MDTCH6#2	MDTCH5#2	MDTCH4#2	MDTCH3#2	MDTCH2#2	MDTCH1#2
F1111								
F1112	EADEN8#2	EADEN7#2	EADEN6#2	EADEN5#2	EADEN4#2	EADEN3#2	EADEN2#2	EADEN1#2
F1113								
F1114	TRQL8#2	TRQL7#2	TRQL6#2	TRQL5#2	TRQL4#2	TRQL3#2	TRQL2#2	TRQL1#2
F1115								
F1116	FRP8#2	FRP7#2	FRP6#2	FRP5#2	FRP4#2	FRP3#2	FRP2#2	FRP1#2
F1117								
F1118	SYN8O#2	SYN7O#2	SYN6O#2	SYN5O#2	SYN4O#2	SYN3O#2	SYN2O#2	SYN1O#2
F1119								
F1120	ZRF8#2	ZRF7#2	ZRF6#2	ZRF5#2	ZRF4#2	ZRF3#2	ZRF2#2	ZRF1#2
F1121								
F1122	HDO7#2	HDO6#2	HDO5#2	HDO4#2	HDO3#2	HDO2#2	HDO1#2	HDO0#2
F1123								
F1124		+OT7#2	+OT6#2	+OT5#2	+OT4#2	+OT3#2	+OT2#2	+OT1#2

	#7	#6	#5	#4	#3	#2	#1	#0
F1125								
F1126		–OT7#2	–OT6#2	–OT5#2	–OT4#2	–OT3#2	–OT2#2	–OT1#2
F1127								
F1128								
F1129	*EAXSL#2		EOV0#2					
F1130	EBSYA#2	EOTNA#2	EOTP#2	EGENA#2	EDENA#2	EIALA#2	ECKZA#2	EINPA#2
F1131							EABUFA#2	EMFA#2
F1132	EM28A#2	EM24A#2	EM22A#2	EM21A#2	EM18A#2	EM14A#2	EM12A#2	EM11A#2
F1133	EBSYB#2	EOTNB#2	EOTB#2	EGENB#2	EDENB#2	EIALB#2	ECKZB#2	EINPB#2
F1134							EABUFB#2	EMFB#2
F1135	EM28B#2	EM24B#2	EM22B#2	EM21B#2	EM18B#2	EM14B#2	EM12B#2	EM11B#2
F1136	EBSYC#2	EOTNC#2	EOTC#2	EGENC#2	EDENC#2	EIALC#2	ECKZC#2	EINPC#2
F1137							EABUFC#2	EMFC#2
F1138	EM28C#2	EM24C#2	EM22C#2	EM21C#2	EM18C#2	EM14C#2	EM12C#2	EM11C#2
F1139	EBSYD#2	EOTND#2	EOTD#2	EGEND#2	EDEND#2	EIALD#2	ECKZD#2	EINPD#2
F1140							EABUFD#2	EMFD#2
F1141	EM28D#2	EM24D#2	EM22D#2	EM21D#2	EM18D#2	EM14D#2	EM12D#2	EM11D#2
F1142	EM48A#2	EM44A#2	EM42A#2	EM41A#2	EM38A#2	EM34A#2	EM32A#2	EM31A#2
F1143								
F1144								
F1145	EM48B#2	EM44B#2	EM42B#2	EM41B#2	EM38B#2	EM34B#2	EM32B#2	EM31B#2
F1146								
F1147								
F1148	EM48C#2	EM44C#2	EM42C#2	EM41C#2	EM38C#2	EM34C#2	EM32C#2	EM31C#2
F1149								

	#7	#6	#5	#4	#3	#2	#1	#0
F1150								
F1151	EM48D#2	EM44D#2	EM42D#2	EM41D#2	EM38D#2	EM34D#2	EM32D#2	EM31D#2
F1152								
F1153								
F1154								
F1155								
F1156								
F1157								
F1158								
F1159								
F1160								
F1161								
F1162								
F1163								
F1164								
F1165								
F1166								
F1167								
F1168	ORARC#2	TLMC#2	LDT2C#2	LDT1C#2	SARC#2	SDTC#2	SSTC#2	ALMC#2
F1169	MORA2C#2	MORA1C#2	PORA2C#2	SLVSC#2	RCFNC#2	RCHPC#2	CFINC#2	CHPC#2
F1170				EXOFC#2	SORENC#2	MSOVRC#2	INCSTC#2	PC1DTC#2
F1171								
F1172	PBATL#2	PBATZ#2						
F1173								
F1174								

	#7	#6	#5	#4	#3	#2	#1	#0
F1175								
F1176								
F1177	EDGN#2	EPARM#2	EVAR#2	EPRG#2	EWTIO#2	ESTPIO#2	ERDIO#2	IOLNK#2
F1178					SRLNO3#2	SRLNO2#2	SRLNO1#2	SRLNO0#2
F1179								
F1180	CLRCH8#2	CLRCH7#2	CLRCH6#2	CLRCH5#2	CLRCH4#2	CLRCH3#2	CLRCH2#2	CLRCH1#2
F1181								
F1182	EACNT8#2	EACNT7#2	EACNT6#2	EACNT5#2	EACNT4#2	EACNT3#2	EACNT2#2	EACNT1#2
F1183								
F1184								
F1185								
F1186								
F1187								
F1188								
F1189								
F1190								
F1191								
F1192								
F1193								
F1194								
F1195								
F1196								
F1197								
F1198								
F1199								

	#7	#6	#5	#4	#3	#2	#1	#0
F1200								
F1201								
F1202								
F1203								
F1204								
F1205								
F1206								
F1207								
F1208								
F1209								
F1210								
F1211								
F1212								
F1213								
F1214								
F1215								
F1216								
F1217								
F1218								
F1219								
F1220								
F1221								
F1222								
F1223								
F1224								

	#7	#6	#5	#4	#3	#2	#1	#0
F1225								
F1226								
F1227								
F1228								
F1229								
F1230								
F1231								
F1232								
F1233								
F1234								
F1235								
F1236								
F1237								
F1238								
F1239								
F1240								
F1241								
F1242								
F1243								
F1244								
F1245								
F1246								
F1247								
F1248								
F1249								

	#7	#6	#5	#4	#3	#2	#1	#0
F1250								
F1251								
F1252								
F1253								
F1254								
F1255								
F1256								
F1257								
F1258								
F1259								
F1260								
F1261								
F1262								
F1263								
F1264	SPWRN8#2	SPWRN7#2	SPWRN6#2	SPWRN5#2	SPWRN4#2	SPWRN3#2	SPWRN2#2	SPWRN1#2
F1265								SPWRN9#2
F1266	ORARD#2	TLMD#2	LDT2D#2	LDT1D#2	SARD#2	SDTD#2	SSTD#2	ALMD#2
F1267	MORA2D#2	MORA1D#2	PORA2D#2	SLVSD#2	RCFND#2	RCHPD#2	CFIND#2	CHPD#2
F1268				EXOFD#2	SOREND#2	MSOVRD#2	INCSTD#2	PC1DTD#2
F1269								
F1270								
F1271								
F1272								
F1273								
F1274								

	#7	#6	#5	#4	#3	#2	#1	#0
F1275								
F1276								
F1277								
F1278								
F1279								
F1280								
F1281								
F1282								
F1283								
F1284								
F1285								
F1286								
F1287								
F1288								
F1289								
F1290								
F1291								
F1292								
F1293								
F1294								
F1295								
F1296								
F1297								
F1298								
F1299								

	#7	#6	#5	#4	#3	#2	#1	#0
F1300								
F1301								
F1302								
F1303								
F1304								
F1305								
F1306								
F1307								
F1308								
F1309								
F1310								
F1311								
F1312								
F1313								
F1314								
F1315								

8 EMBEDDED ETHERNET FUNCTION

This chapter describes the specifications of the embedded Ethernet function for Series 16*i*/18*i*/21*i*/160*i*/180*i*/210*i*/160*i*s/180*i*s/210*i*s–B.

8.1 EMBEDDED ETHERNET AND PCMCIA ETHERNET

The embedded Ethernet function can be used by selecting one of two types of devices: the embedded Ethernet port and PCMCIA Ethernet card.

The PCMCIA Ethernet card is to be inserted into the memory card slot to the left of the front LCD for temporary communication.

NOTE

1 Use the PCMCIA Ethernet card for temporary communication only. Do not use the PCMCIA Ethernet card for routine communication.
2 The PCMCIA Ethernet card is to be inserted into the memory card slot to the left of the LCD. This means that some part of the card is projected. When using the PCMCIA Ethernet card, be careful not to damage the card by hitting the card with an object.
  After using the PCMCIA Ethernet card, remove the card immediately to prevent the card from being damaged.
3 With FS21*i*–B, the embedded Ethernet port cannot be used.
4 This section assumes that the PCMCIA Ethernet card is inserted into the Series 16*i*/18*i*/21*i*–B CNC. When inserted into the Series 160*i*/180*i*/210*i*/160*is*/180*is*/210*is* CNC, the PCMCIA Ethernet card is not a embedded Ethernet card.

8.2 LIST OF FUNCTIONS

With the embedded Ethernet function, the following functions can be operated:

- FACTOLINK function
- FOCAS1/Ethernet function
- DNC1/Ethernet function
- FTP file transfer function

8.2.1 FACTOLINK Function

With the FACTOLINK function, data can be displayed on the CNC screen, and NC data can be transferred by operations on the NC.
For details, refer to “FANUC FACTOLINK Script Function OPERATOR’S MANUAL (B–75054EN)”.

NOTE
The FACTOLINK function is usable with the control software for the embedded Ethernet function series 656A edition 02 or later.

Screen display

Data created by a personal computer can be displayed on the NC screen by operations on the NC.

NC data transfer

The following NC data can be transferred by operations on the NC:

- NC program
- NC file data
  - Parameter
  - Ladder program
  - C languarge executor in executable form
  - Macro executor in executable form
  - NC system file
- PMC data
  - Addresses T, K, C, D

Logging

Machine state information can be automatically sent to the personal computer.

8.2.2 FOCAS1/Ethernet Function

The FOCAS1/Ethernet function allows a personal computer to remotely control and monitor the CNC. The FOCAS1/Ethernet function can transfer a wider range of NC data than the DNC1/Ethernet function. For details, refer to ”FANUC Open CNC FOCAS1/Ethernet CNC/PMC Data Window Library Description”.

NC data transfer

The following NC data can be transferred by operations on the personal computer:

- Data related to control axes/spindles

  - Absolute position
  - Relative position
  - Machine position
  - Remaining travel amount
  - Actual speed
- NC program
- Part program storage directory information
- NC data file
  - Parameter
  - Tool offset value
  - Custom macro variable
  - Workpiece origin offset
  - Setting data
  - P code macro variable
  - Pitch error compensation
- Tool life management data
- History data
  - Operation history data
  - Alarm history data
- Servo–/spindle–related data
- Data related to waveform diagnosis
- Modal data
- Diagnosis data
- A/D conversion data
- Alarm information
- NC system identification information
- PMC data
  - Addresses G, F, Y, X, A, R, T, K, C, D
  - Extended nonvolatile data

Remote operation

From the personal computer, the following operations can be performed:

- NC program selection
- NC program deletion
- External reset

NOTE
With the FOCAS1/Ethernet function of the embedded Ethernet function, DNC operation cannot be performed.

8.2.3 DNC1/Ethernet Function

The DNC1/Ethernet function allows a personal computer to remotely control and monitor the CNC. The DNC1/Ethernet function provides software libraries in a simpler function call format when compared with the FOCAS1/Ethernet function.
For details, refer to “FANUC Personal Computer FA System Windows NT Version OPERATOR’S MANUAL (B–75044EN)”.

NC data transfer

The following NC data can be transferred by operations on the personal computer:

- NC program
- Part program storage directory information
- NC file data
  - Parameter
  - Tool offset value
  - Custom macro variable
- Alarm information
- NC system identification information
- PMC data
  - Addresses G, F, Y, X, A, R, T, K, C, D

Remote operation

From the personal computer, the following operations can be performed:

- NC program selection
- NC program deletion
- External reset

NOTE
With the DNC1/Ethernet function of the embedded Ethernet function, DNC operation cannot be performed.

Differences between the FOCAS1/Ethernet function and DNC1/Ethernet function

Compared with the FOCAS1/Ethernet function, the DNC1/Ethernet function provides software libraries in a simpler function call format for frequently used functions.

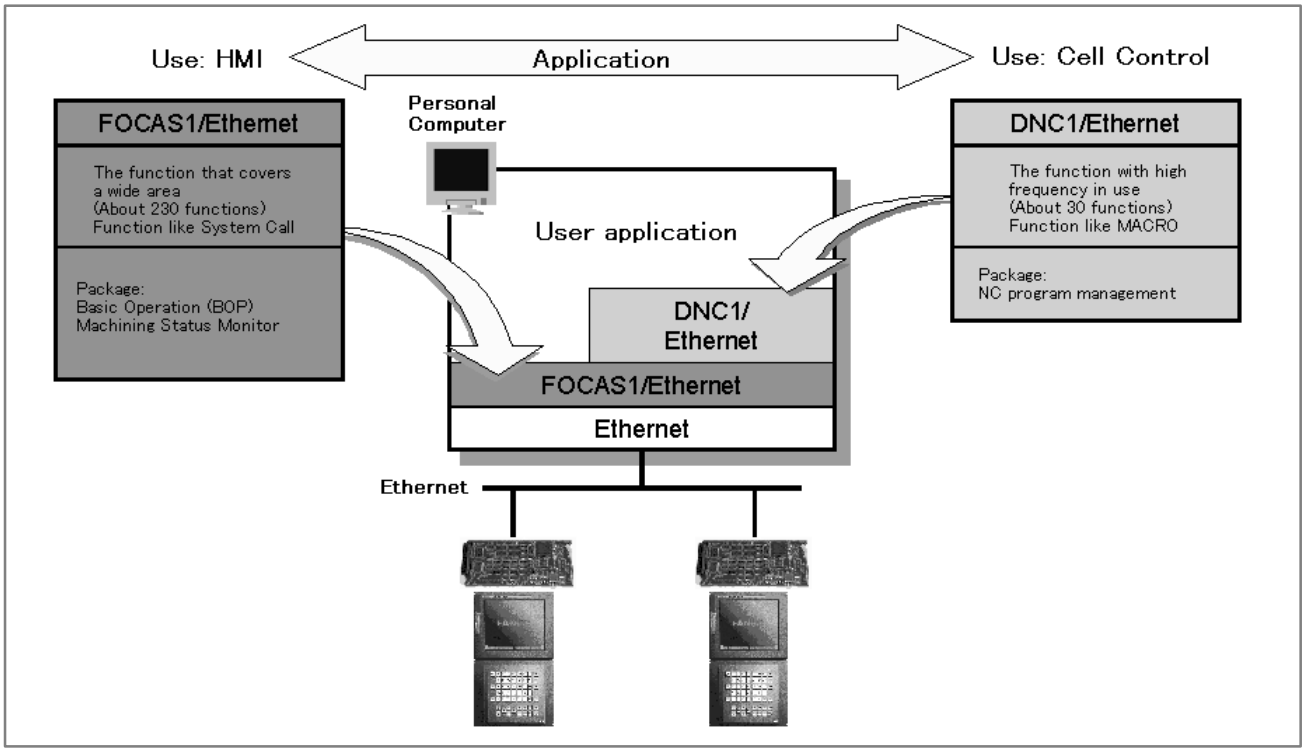

8.2.4 FTP File Transfer Function

The FTP file transfer function transfers files with FTP. The function can read and punch NC programs and various types of NC data.

NOTE
The FTP file transfer function is usable with the control software for the embedded Ethernet function series 656A edition 02 or later.

NC data transfer [Personal computer ←→ Part program storage]

The following NC data can be transferred by operations on the NC:

- NC program
- NC file data
  - Parameter
  - Tool offset value
  - Workpiece origin offset value
  - Pitch error compensation
  - M code group (Series 16*i*/18*i*/160*i*/180*i*/160*is*/180*is*–B only)
- History data
  - Operation history data

8.2.5 Functional Differences between the Embedded Ethernet Function and the Ethernet Function Based on the Option Board

The table below indicates the differences between the embedded Ethernet function and the Ethernet function based on the option board.

	Embedded Ethernet	Option board
FOCAS1/Ethernetfunction	Available	Available
CNC screen display function	Not available	Available
DNC operation	Not available	Available
Data Server function	Not available (Note 1)	Available
FACTOLINK function	Available	Available

NOTE

1 The embedded Ethernet function includes the FTP file transfer function.
This function is almost equivalent to the NC data transfer function in the FTP mode of the Data Server function of the option board.

2 Compared with the option board, the embedded Ethernet function allows a smaller number of FOCAS1/Ethernet clients to be connected simultaneously.

	Embedded Ethernet	**Ethernet board**	**Fast Ethernet board**
Number of clients that can be connected simultaneously	5 clients maximum	10 clients maximum	20 clients maximum
Number of personal computers that can be connected simultaneously	1 unit (recommended)	10 units maximum	20 units maximum

3 Communications using the embedded Ethernet function is processed by the CPU of the CNC. This means that the operation state of the CNC can affect the performance of communication based on the embedded Ethernet function, and communication based on the embedded Ethernet function can affect the processing of the CNC.
The embedded Ethernet function has lower priority than axis–by–axis processing such as automatic operation processing and manual operation. So, when automatic operation is being performed or many controlled axes are involved, communication may become slower.
On the contrary, the embedded Ethernet function has higher priority over CNC screen display processing, C language executor processing (excluding high–level tasks), and macro executor processing (excluding execution macros). So, communication based on the embedded Ethernet function can decrease the performance of such processing.

4 Note that when the embedded Ethernet function is connected to an intranet that handles large volumes of broadcast data, for example, the processing of broadcast data can take a longer time, resulting in a decrease in performance of processing such as CNC screen display processing.

8.3 SETTING THE EMBEDDED ETHERNET FUNCTION

This section describes the setting of the parameters for the embedded Ethernet function for the Series 16*i*/18*i*/21*i*/160*i*/180*i*/210*i*/160*is*/180*is*/210*is*–B.

8.3.1 Parameter Setting of the FACTOLINK Function

This subsection describes the settings required to operate the FACTOLINK function when the embedded Ethernet function for the Series 16*i*/18*i*/21*i*/160*i*/180*i*/210*i*/160*is*/180*is*/210*is*–B is used.

8.3.1.1 Notes on using the FACTOLINK function for the first time

CAUTION

When using the embedded Ethernet function for the first time, make various settings including IP address setting carefully and conduct a communication test sufficiently, consulting with your network manager.
Note that if an incorrect IP address is set, for example, the entire network may suffer from a communication error.

NOTE

1 When the FACTOLINK function is used, the optional function corresponding to a CNC used is required.

Series16*i*–TB	A02B–0281–S708
Series 16*i*–MB	A02B–0282–S708
Series 18*i*–TB	A02B–0283–S708
Series 18*i*–MB	A02B–0284–S708
Series 21*i*–TB	A02B–0285–S708
Series 21*i*–MB	A02B–0286–S708

2 With the FACTOLINK function, only one FACTOLINK server can be connected to one CNC.

8.3.1.2 FACTOLINK parameter setting screen

On the Ethernet parameter setting screen, set the parameters for operating the FACTOLINK function.

Display

Procedure

1 Place the CNC in the MDI mode.

2 Press the function key SYSTEM .

3 Press the continuous menu key at the right end of the soft key display.

4 Press the [ETHPRM] soft key. The Ethernet parameter setting screen appears. The Ethernet functions currently available are displayed.

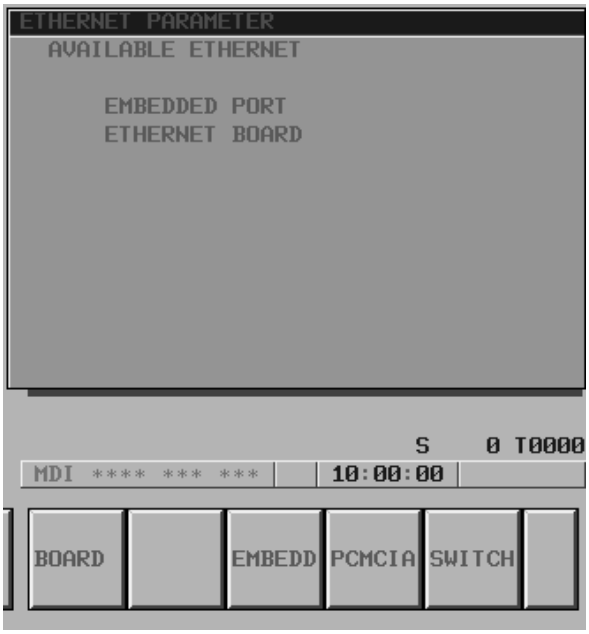

The upper row displays the usable embedded Ethernet function device.
The embedded port or PCMCIA card is displayed.
The lower row displays the usable Ethernet option boards. When no option board is installed, no information is displayed.

5 By pressing the [EMBEDD] soft key, the parameters for the embedded Ethernet port can be set.
By pressing the [PCMCIA] soft key, the parameters for the PCMCIA Ethernet card can be set.

NOTE
The parameters for the embedded Ethernet port and the parameters for the PCMCIA Ethernet card are independent of each other.

6 By using the MDI keys and soft keys, enter and update data.

7 Switch the screen display with the page keys PAGE PAGE .

If data is already registered, the data is displayed.

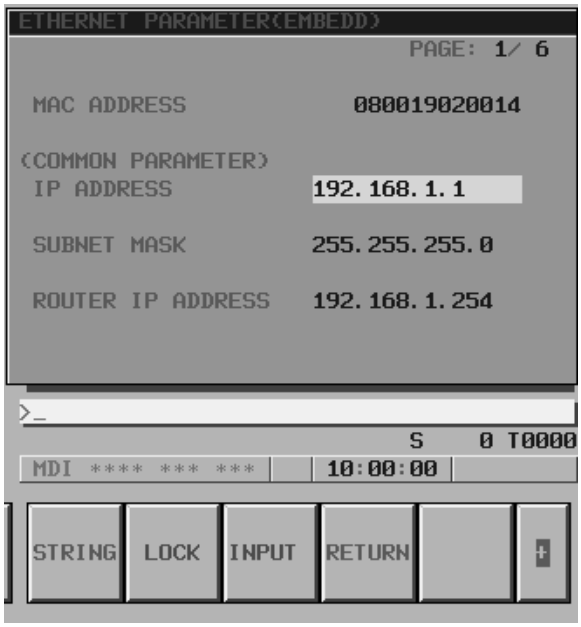

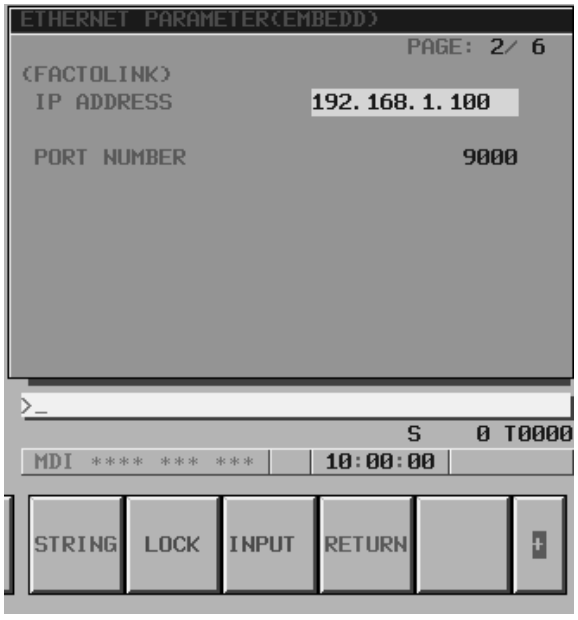

Display item and setting items

Display item related to the embedded Ethernet function

The item related to the embedded Ethernet function is displayed.

Item	Description
MAC ADDRESS	Embedded Ethernet MAC address

Embedded Ethernet TCP/IP setting items

Set the TCP/IP–related items of the embedded Ethernet.

Item	Description
IP ADDRESS	Specify the IP address of the embedded Ethernet. (Example of specification format: ”192.168.1.1”)
SUBNET MASK	Specify a mask address for the IP addresses of the network. (Example of specification format: ”255.255.255.0”)
ROUTER IP ADDRESS	Specify the IP address of the router. Specify this item when the network contains a router. (Example of specification format: ”192.168.1.254”)

FACTOLINK setting items

Set the items related to the host computer with which the FACTOLINK server operates.

Item	Description
IP ADDRESS	Specify the IP address of a personal computer to be accessed by the FACTOLINK function. (Example of specification format: ”192.168.1.100”)
PORT NUMBER	Specify a port number to be used with the FACTOLINK function. The valid input range is 5001 to 65535. A specified port number must match ”ocsnc” of the ”services” file of the personal computer. For details, refer to ” FANUC FACTOLINK Script Function OPERATOR’S MANUAL (B–75054EN)”.

8.3.1.3 Parameters

The NC parameters related to the FACTOLINK function are described below.

Parameters

0802	Communicationchannel

[Data type] Byte

[Valid data range] 21: Select the embedded Ethernet.

	#7	#6	#5	#4	#3	#2	#1	#0
0810			MONO	TIME				BGS

[Data type] Bit

BGS When the FACTOLINK screen is not displayed:
0 : Logging is performed in the background.
1 : Logging is not performed.

TIME Selects the time display format:
0 : ”97/11/12 00:00” format is used.
1 : ”Wed Nov 12 00:00:00” format is used.

MONO When the FACTOLINK screen is displayed:
0 : Two–tone monochrome display is used.
1 : Color display is used.

0811	Type of logging

[Data type] Byte

[Valid data range] 0, 1, 10, 20, 21
0 : D address area
1 : R address area
10 : Fixed data only
20 : D address area + fixed data
21 : R address area + fixed data

0812	PMC address for logging data

[Data type] Word

[Valid data range] 0 to 65535
Set a start PMC address for storing logging data.

0813	Data length of logging data

[Data type] Word

[Unit of data] Number of bytes

[Valid data range] 0 to 65535
Set the data length of logging data.

0814	Trigger PMC address for logging

[Data type] Word

[Valid data range] 0 to 65535

Set a PMC address that serves as a trigger for specifying logging data.

0815	Logging data transmission interval

[Data type] Double–word

[Unit of data] Seconds

[Valid data range] 0 to 4294967295

Set a time interval used for transmitting logging data (fixed data only). If 0 is set, logging data is transmitted at connection time only.

0820	Machine name posted to the host computer (1st byte)
0821	Machine name posted to the host computer (2nd byte)
0822	Machine name posted to the host computer (3rd byte)
0823	Machine name posted to the host computer (4th byte)
0824	Machine name posted to the host computer (5th byte)
0825	Machine name posted to the host computer (6th byte)
0826	Machine name posted to the host computer (7th byte)
0827	Machine name posted to the host computer (8th byte)
0828	Machine name posted to the host computer (9th byte)

[Data type] Byte

[Valid data range] 32 to 126

Set a machine name that is unique to each CNC and is required for the host computer to identify each CNC. Use ASCII codes in decimal for alphanumeric characters and blanks to set a machine name.

	#7	#6	#5	#4	#3	#2	#1	#0
3111	NPA							

[Data type] Bit

NPA When an alarm is issued while the FACTOLINK screen is displayed:

0 : The screen display does not switch to the alarm screen.
1 : The screen display switches to the alarm screen.

8.3.1.4 Using the FACTOLINK function on a small network

An example of minimum setting required to operate the FACTOLINK function on a small network is provided below.
In this example, one personal computer is connected to two CNCs through FACTOLINK.

- On Personal Computer 1, the server of the FACTOLINK function operates.
- On CNC 1 and CNC 2, the client of the FACTOLINK function operates.

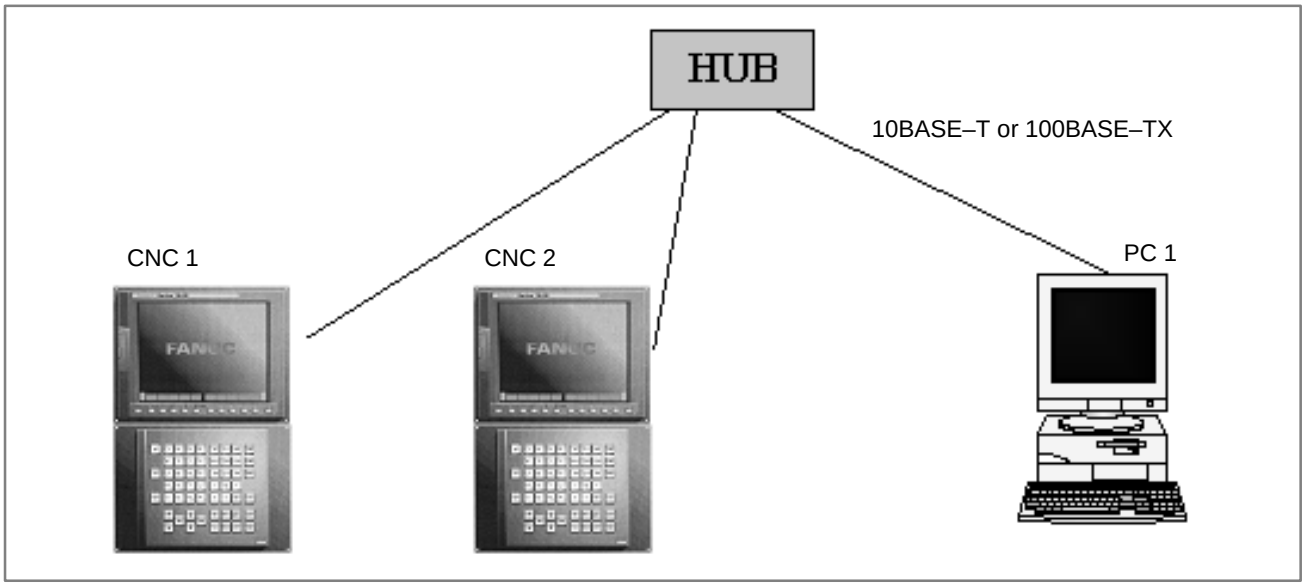

	CNC 1	CNC 2
IP address	192.168.1.1	192.168.1.2
Subnet mask	255.255.255.0	255.255.255.0
Router IP address	None	None
IP address	192.168.1.100	192.168.1.100
Port number	9000	9000
NC parameter No. 802	21	21
NC parameter No. 820	67 'C'	67 'C'
NC parameter No. 821	78 'N'	78 'N'
NC parameter No. 822	67 'C'	67 'C'
NC parameter No. 823	49 '1'	50 '2'

→ The Ethernet parameter screen is used for setting.

→ The parameter screen is used for setting.

	PC 1
IP address	192.168.0.100
Subnet mask	255.255.255.0
Default gateway	None
ocsnc	9000/TCP
ocscomm	9001/TCP
ocsapplication	9002/TCP

→ "Microsoft TCP/IP property" of the personal computer (Windows NT) is used for setting.

→ Refer to "FANUC FACTOLINK Script Function OPERATOR'S MANUAL (B–75054EN)".

8.3.1.5 Configuring a large network

When configuring a large network or expanding an existing network, consult with your network manager to set an IP address, subnet mask, and router IP address.

8.3.2 Parameter Setting of the FOCAS1/Ethernet Function

This subsection describes the settings required to operate the FOCAS1/Ethernet function (or DNC1/Ethernet function) when the embedded Ethernet function for the Series 16*i*/18*i*/21*i*/160*i*/180*i*/210*i*/160*is*/180*is*/210*is*–B is used.

8.3.2.1 Notes on using the FOCAS1/Ethernet function for the first time

CAUTION

When using the embedded Ethernet function for the first time, make various settings including IP address setting carefully and conduct a communication test sufficiently, consulting with your network manager.
Note that if an incorrect IP address is set, for example, the entire network can suffer from a communication error.

NOTE

1 The FOCAS1/Ethernet function allows up to five FOCAS1/Ethernet clients to be connected to one CNC.
2 If multiple application software products or multiple personal computers access the CNC simultaneously, the communication load on the CNC can increase, resulting in decreased communication speed and degraded CNC screen display processing.

8.3.2.2 FOCAS1/Ethernet parameter setting screen

On the Ethernet parameter setting screen, set the parameters for operating the FOCAS1/Ethernet function.

Display

Procedure

1 Place the CNC in the MDI mode.

2 Press the function key SYSTEM .

3 Press the continuous menu key at the right end of the soft key display.

4 Press the [ETHPRM] soft key. The Ethernet parameter setting screen appears. The Ethernet functions currently available are displayed

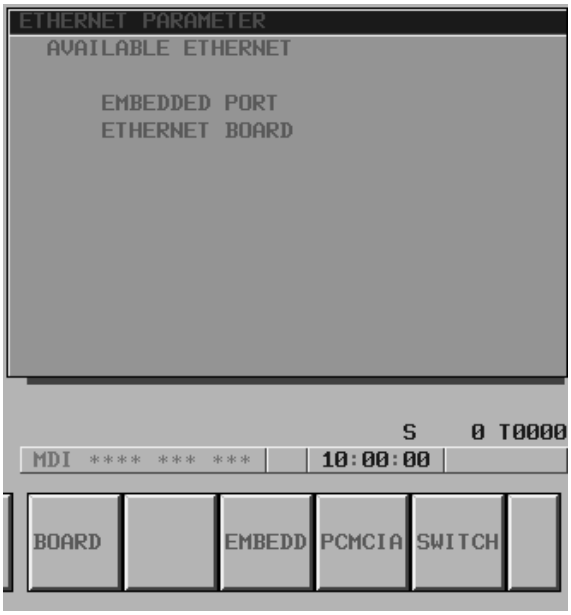

The upper row displays the usable embedded Ethernet function device.
The embedded port or PCMCIA card is displayed.
The lower row displays the usable Ethernet option boards. When no option board is installed, no information is displayed.

5 By pressing the [EMBEDD] soft key, the parameters for the embedded Ethernet port can be set.
By pressing the [PCMCIA] soft key, the parameters for the PCMCIA Ethernet card can be set.

NOTE
The parameters for the embedded Ethernet port and the parameters for the PCMCIA Ethernet card are independent of each other.

6 By using the MDI keys and soft keys, enter and update data.

7 Switch the screen display with the page keys PAGE PAGE .

If data is already registered, the data is displayed.

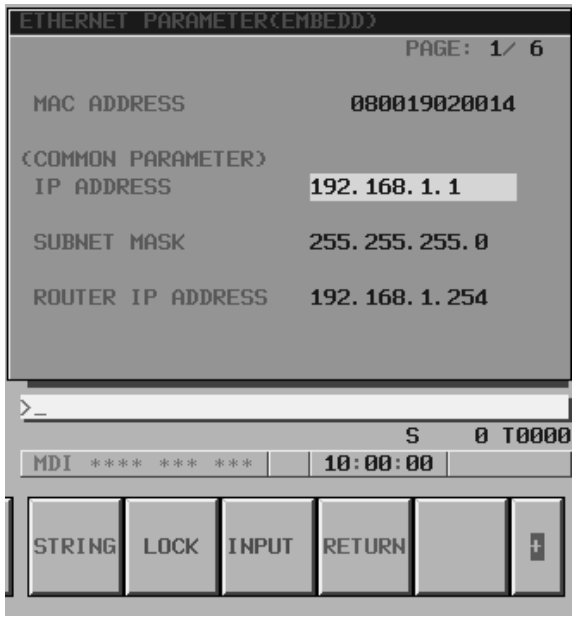

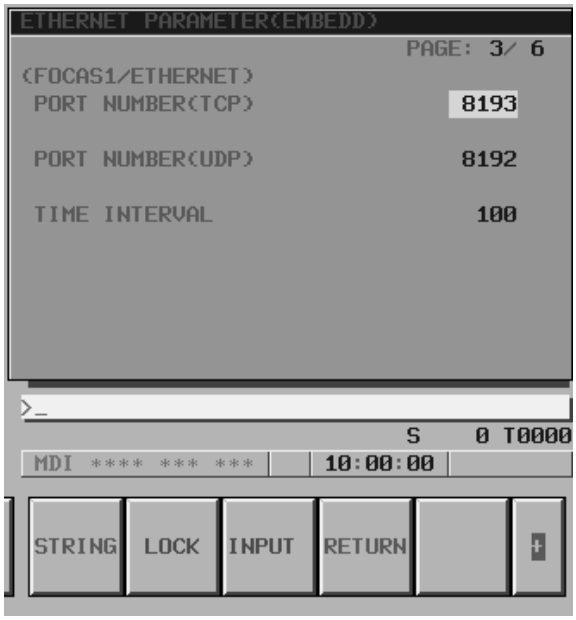

Display item and setting items

Display item related to the embedded Ethernet function

The item related to the embedded Ethernet function is displayed.

Item	Description
MAC ADDRESS	Embedded Ethernet MAC address

Embedded Ethernet TCP/IP setting items

Set the TCP/IP–related items of the embedded Ethernet.

Item	Description
IP ADDRESS	Specify the IP address of the embedded Ethernet. (Example of specification format: ”192.168.1.1”)
SUBNET MASK	Specify a mask address for the IP addresses of the network. (Example of specification format: ”255.255.255.0”)
ROUTER IP ADDRESS	Specify the IP address of the router. Specify this item when the network contains a router. (Example of specification format: ”192.168.1.254”)

FOCAS1/Ethernet setting items

Set the items related to the FOCAS1/Ethernet function.

Item	Description
PORT NUMBER (TCP)	Specify a port number to be used with the FOCAS1/Ethernet function. The valid input range is 5001 to 65535. When using a port number for the DNC1/Ethernet function, refer to ”FANUC Personal Computer FA System Windows NT Version OPERATOR’S MANUAL (B–75044EN)”.
PORT NUMBER (UDP)	Specify this item when using the DNC1/Ethernet function. Specify a UDP port number for transmitting UDP broadcast data. The valid input range is 5001 to 65535. For details, refer to ”FANUC Personal Computer FA System Windows NT Version OPERATOR’S MANUAL (B–75044EN)”. Set 0 when using the FOCAS1/Ethernet function or when transmitting no UDP broadcast data.
TIME INTERVAL (NOTE 1)	Specify this item when using the DNC1/Ethernet function. Specify a time interval at which UDP broadcast data specified above with a UDP port number is transmitted. The unit is 10 ms. The valid input range is 10 to 65535. This means that a value less than 100 ms cannot be specified. Set 0 when using the FOCAS1/Ethernet function or when transmitting no UDP broadcast data. Example) 100: Broadcast data is transmitted at intervals of one second [1000 ms] (= 100 × 10).

NOTE

1 When a small value is set for the item of time interval, communication load increases, and the performance of the network can be adversely affected.
2 The parameters for the PCMCIA Ethernet card are set to the following default values before shipment:

IP address:	192.168.1.1
Subnet mask:	255.255.255.0
Router IP address:	None
TCP port number:	8193
UDP port number:	0
Time interval:	0

8.3.2.3 Using the FOCAS1/Ethernet function on a small network

An example of minimum setting required to operate the FOCAS1/Ethernet function on a small network is provided below.
In this example, one personal computer is connected to two CNCs through FOCAS1/Ethernet.

- On Personal Computer 1, the client of the FOCAS1/Ethernet function operates.
- On CNC 1 and CNC 2, the server of the FOCAS1/Ethernet function operates

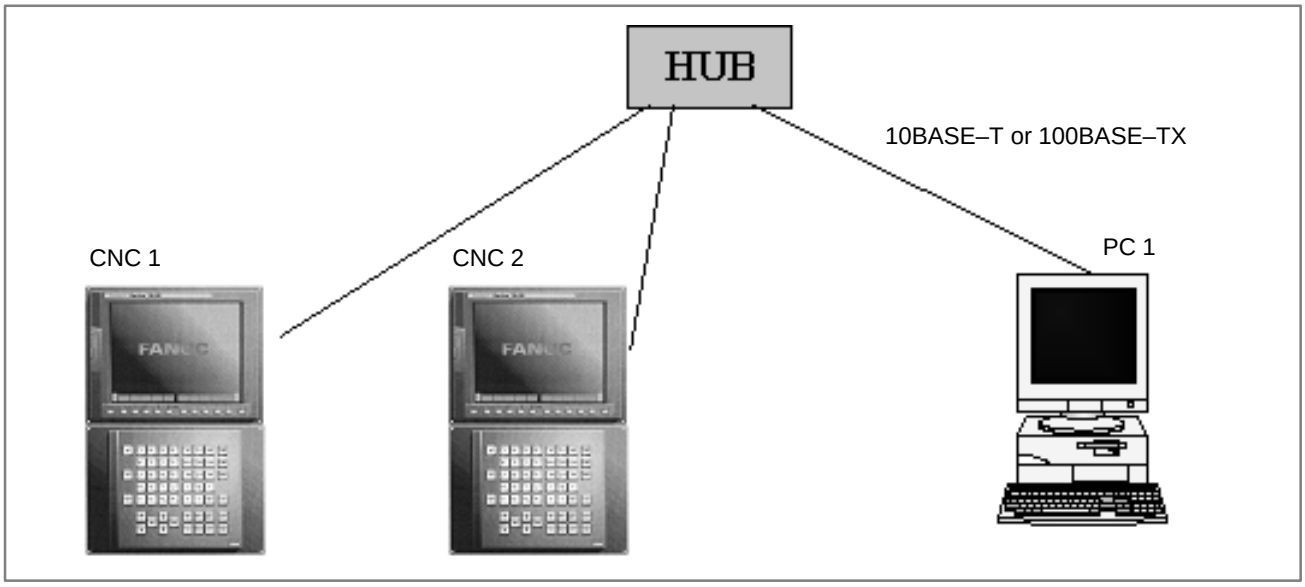

	CNC 1	CNC 2
IP address	192.168.1.1	192.168.1.2
Subnet mask	255.255.255.0	255.255.255.0
Router IP address	None	None
TCP port number	8193	8193
UDP port number	0	0
Time interval	0	0

The Ethernet parameter screen is used for setting.

		PC 1
IP address		192.168.1.101
Subnet mask		255.255.255.0
Default gateway		None
CNC 1	NC IP address	192.168.1.1
	NC TCP port number	8193
CNC 2	NC IP address	192.168.1.2
	NC TCP port number	8193

”Microsoft TCP/IP property” of the personal computer (Windows 95/98/NT/2000) is used for setting.

The arguments of the data window library function cnc_allclibhndl3 are used for setting.

8.3.2.4 Using the DNC1/Ethernet function on a small network

An example of minimum setting required to operate the DNC1/Ethernet function on a small network is provided below.
In this example, one personal computer is connected to two CNCs through DNC1/Ethernet.

- On Personal Computer 1, the client of the DNC1/Ethernet function operates.
- On CNC 1 and CNC 2, the server of the DNC1/Ethernet function operates.

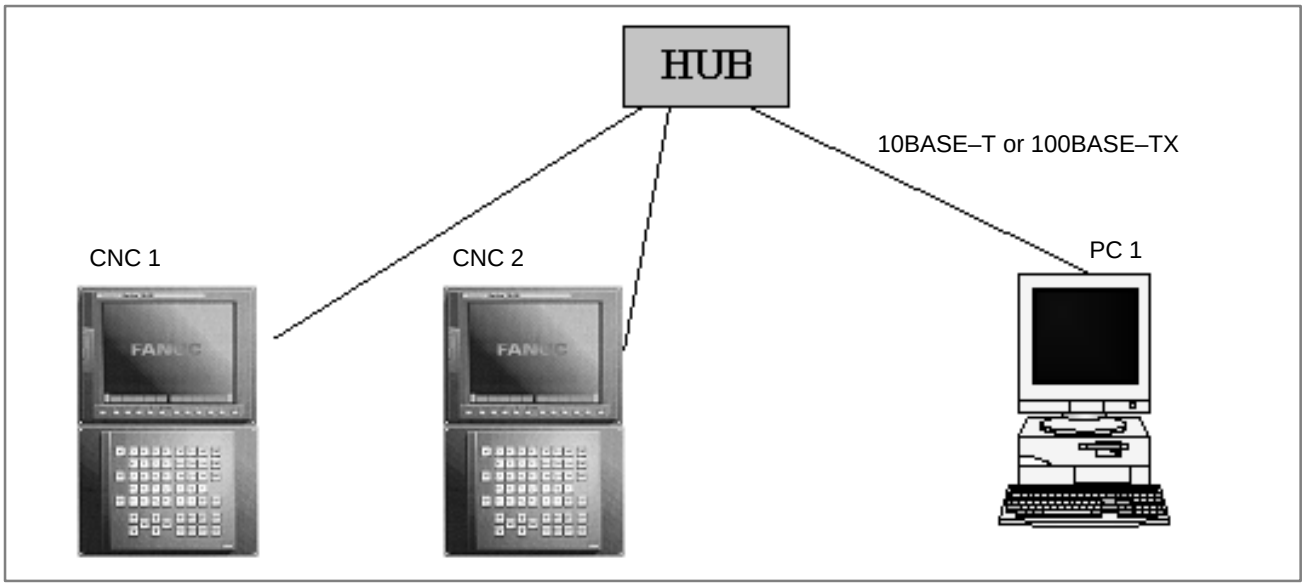

	CNC 1	CNC 2
IP address	192.168.1.1	192.168.1.2
Subnet mask	255.255.255.0	255.255.255.0
Router IP address	None	None
TCP port number	8193	8193
UDP port number	8192	8192
Time interval	100	100

The Ethernet parameter screen is used for setting.

		PC 1
IP address		192.168.1.101
Subnet mask		255.255.255.0
Default gateway		None
FANUC_C4_SERVER		8192/udp
CNC 1		Machine No. 1
	NC IP address	192.168.1.1
	NC TCP port number	8193
CNC 2		Machine No. 2
	NC IP address	192.168.1.2
	NC TCP port number	8193

”Microsoft TCP/IP property” of the personal computer (Windows NT) is used for setting.

Refer to ”FANUC Personal Computer FA System Windows NT Version OPERATOR’S MANUAL”.

8.3.2.5 Configuring a large network

When configuring a large network or expanding an existing network, consult with your network manager to set an IP address, subnet mask, and router IP address.

8.3.3 Parameter Setting of the FTP File Transfer Function

This subsection describes the settings required to operate the FTP file transfer function when the embedded Ethernet function for the Series 16*i*/18*i*/21*i*/160*i*/180*i*/210*i*/160*is*/180*is*/210*is*–B is used.

8.3.3.1 Notes on using the FTP file transfer function for the first time

CAUTION

When using the embedded Ethernet function for the first time, make various settings including IP address setting carefully and conduct a communication test sufficiently, consulting with your network manager.

Note that if an incorrect IP address is set, for example, the entire network can suffer from a communication error.

NOTE

With the FTP file transfer function, only one FTP session can be established with one CNC.

8.3.3.2 FTP file transfer parameter setting screen

On the Ethernet parameter setting screen, set the parameters for operating the FTP file transfer function.

Display

Procedure

1 Place the CNC in the MDI mode.

2 Press the function key SYSTEM .

3 Press the continuous menu key at the right end of the soft key display.

4 Press the [ETHPRM] soft key. The Ethernet parameter setting screen appears. The Ethernet functions currently available are displayed.

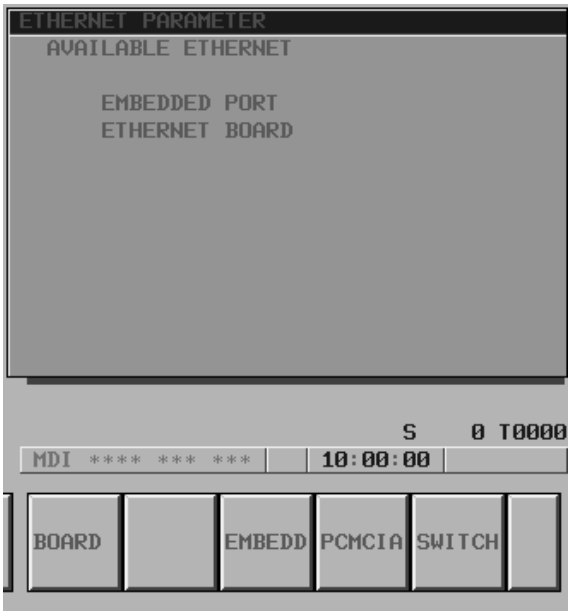

The upper row displays the usable embedded Ethernet function device.
The embedded port or PCMCIA card is displayed.
The lower row displays the usable Ethernet option boards. When no option board is installed, no information is displayed.

5 By pressing the [EMBEDD] soft key, the parameters for the embedded Ethernet port can be set.
By pressing the [PCMCIA] soft key, the parameters for the PCMCIA Ethernet card can be set.

NOTE
The parameters for the embedded Ethernet port and the parameters for the PCMCIA Ethernet card are independent of each other.

6 By using the MDI keys and soft keys, enter and update data.

7 Switch the screen display with the page keys PAGE PAGE .

If data is already registered, the data is displayed.

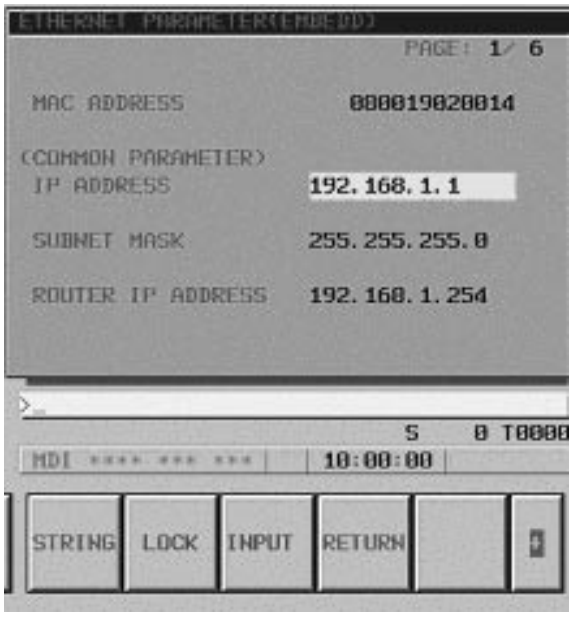

Display item and setting items

Display item related to the embedded Ethernet function

The item related to the embedded Ethernet function is displayed.

Item	Description
MAC ADDRESS	Embedded Ethernet MAC address

Embedded Ethernet TCP/IP setting items

Set the TCP/IP–related items of the embedded Ethernet.

Item	Description
IP ADDRESS	Specify the IP address of the embedded Ethernet. (Example of specification format: ”192.168.1.1”)
SUBNET MASK	Specify a mask address for the IP addresses of the network. (Example of specification format: ”255.255.255.0”)
ROUTER IP ADDRESS	Specify the IP address of the router. Specify this item when the network contains a router. (Example of specification format: ”192.168.1.254”)

FTP file transfer setting items

Make settings related to the FTP file transfer function.
Settings for up to three host computers can be made.

Item	Description
PORT NUMBER	Specify a port number to be used with the FTP file transfer function. An FTP session is used, so that ”21” is to be specified usually.
IP ADDRESS	Specify the IP address of the host computer. (Example of specification format: ”192.168.1.150”)
USERNAME	Specify a user name to be used for logging in to the host computer with FTP. (Up to 31 characters can be specified.)
PASSWORD	Specify a password for the user name specified above. Be sure to set a password. (Up to 31 characters can be specified.)
LOGIN DIR	Specify a work directory to be used when logging in to the host computer. (Up to 127 characters can be specified.)

8.3.3.3 Parameters

The NC parameters related to the FTP file transfer function are described below.

Parameters

0020	I/O CHANNEL: Input/output device selection

[Data type] Byte

[Valid data range] 9: Select the embedded Ethernet as the input/output device.

0931	Special character (No. 1)
0932	Special character (No. 2)
0933	Special character (No. 3)
0934	Special character (No. 4)
0935	Special character (No. 5)

[Data type] Byte

[Valid data range] 32 to 126

NC parameters No. 931 to No. 935 enable soft keys to substitute for characters unavailable with the MDI keys.
When a number other than 0 is set in each of these parameters, [CHAR–1] to [CHAR–5] are displayed in the input soft keys for special characters.

Example) When 33 is set in parameter No. 931, pressing the [CHAR–1] soft key enters ”!”.

8.3.3.4 Using the FTP file transfer function on a small network

An example of minimum setting required to operate the FTP file transfer function on a small network is provided below. (Windows NT 4.0 Workstation is used as the OS for the personal computer.)
In this example, one personal computer is connected to two CNCs through the FTP file transfer function.

- On Personal Computer 1, the FTP server function operates.
- On CNC 1 and CNC 2, the FTP client operates as the FTP file transfer function.

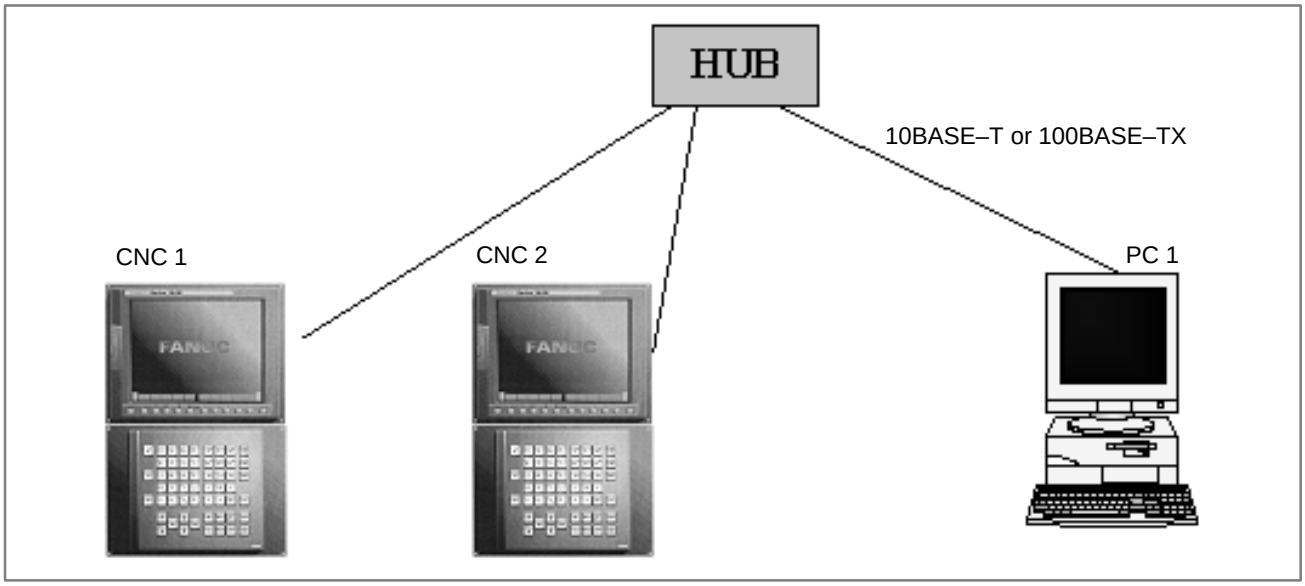

		CNC 1	CNC 2
IP address		192.168.1.1	192.168.1.2
Subnet mask		255.255.255.0	255.255.255.0
Router IP address		None	None
Connection host 1	Port number	21	21
	IP address	192.168.1.150	192.168.1.150
	User name	FANUC	FANUC
	Password	FANUC	FANUC
	Login DIR	None	None
NC parameter No. 20		9	9

The Ethernet parameter screen is used for setting.

The parameter screen is used for setting.

	PC 1
IP address	192.168.1.150
Subnet mask	255.255.255.0
Default gateway	None
User name	FANUC
Password	FANUC
Login DIR	Default

"Microsoft TCP/IP property" of the personal computer (Windows NT) is used for setting.

"User manager" of the personal computer (Windows NT) is used for setting.

"Internet service manager" of the personal computer (Windows NT) is used for setting.

8.3.3.5 Configuring a large network

When configuring a large network or expanding an existing network, consult with your network manager to set an IP address, subnet mask, and router IP address.

8.3.4 Communication Parameter Input Method

This subsection describes the method of parameter input when the embedded Ethernet function for the Series 16*i*/18*i*/21*i*/160*i*/180*i*/210*i*/160*is*/180*is*/210*is*–B is used.

Basic method of data input

The basic method of data input is described below, using an example of IP address input.

Procedure

1 Place the CNC in the MDI mode.
2 Display the Ethernet parameter screen.
3 Move the cursor to a desired input item with cursor keys.
4 Type data with MDI keys.
5 Press the [INPUT] soft key or the function key INPUT to enter the data.

NOTE
When deleting numeric data already set, enter 0. When deleting character data already set, enter SP (space).

Example) Setting 192.168.1.1 as IP address data
(a) Move the cursor to the item of IP address.

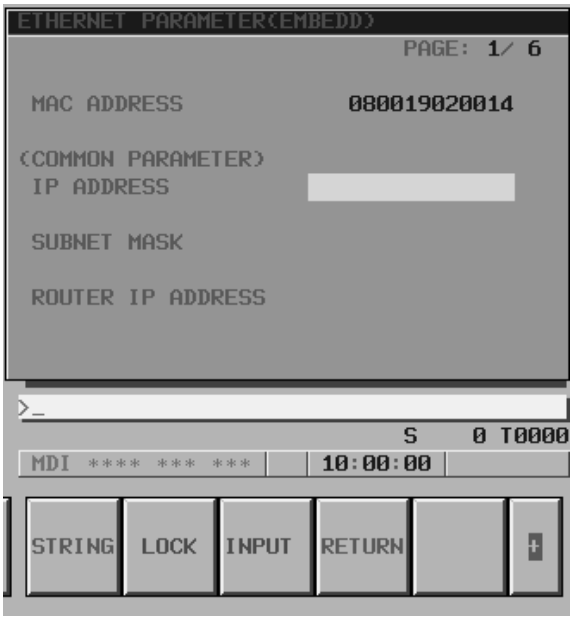

(b) Type 192.168.1.1 with the MDI keys.

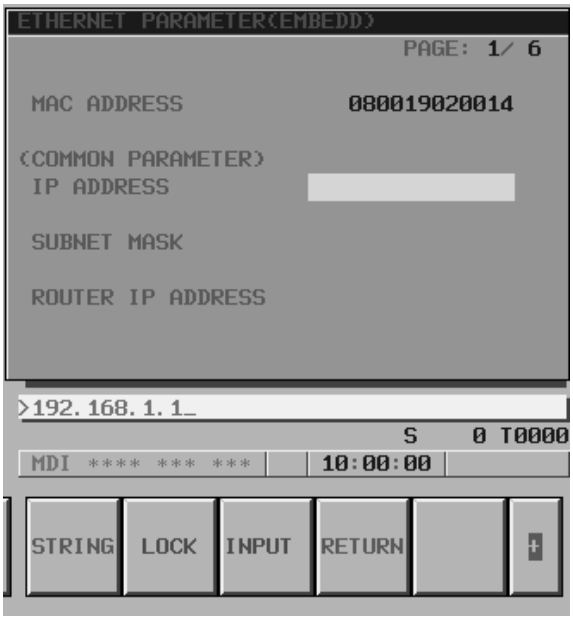

(c) Press the [INPUT] soft key or the function key INPUT to enter the data.

This stores the parameter in the nonvolatile memory of the CNC.

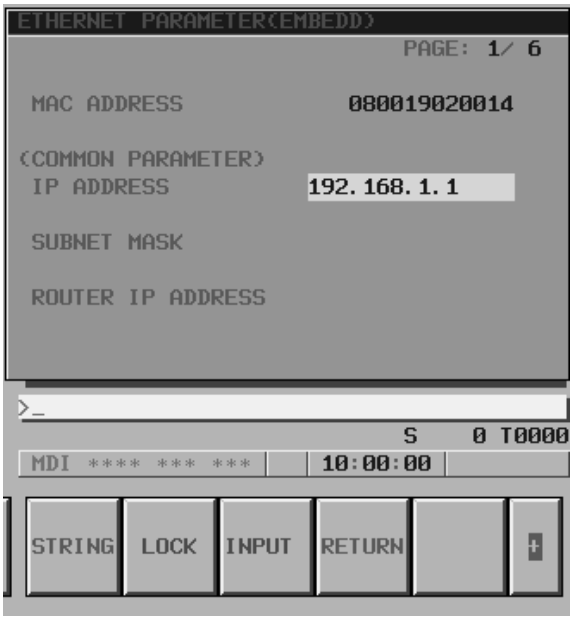

NOTE

Turn on the power again so that you should make a changed parameter effective.

Or, push soft key [RESET] on the maintenance screen of embedded Ethernet.

Method of lowercase character input

The method of entering lowercase characters when specifying a user name, password, and login DIR is described below.

Procedure

1 Place the CNC in the MDI mode.

2 Display the Ethernet parameter screen.

3 Move the cursor to a desired input item with cursor keys.

4 When the [UNLOCK] soft key is displayed, uppercase characters are actually entered through MDI keys. For lowercase character input, press the [UNLOCK] soft key. The soft key display changes from [UNLOCK] to [LOCK].

5 Then, press the MDI keys A through Z. All of these characters are entered as lowercase characters.

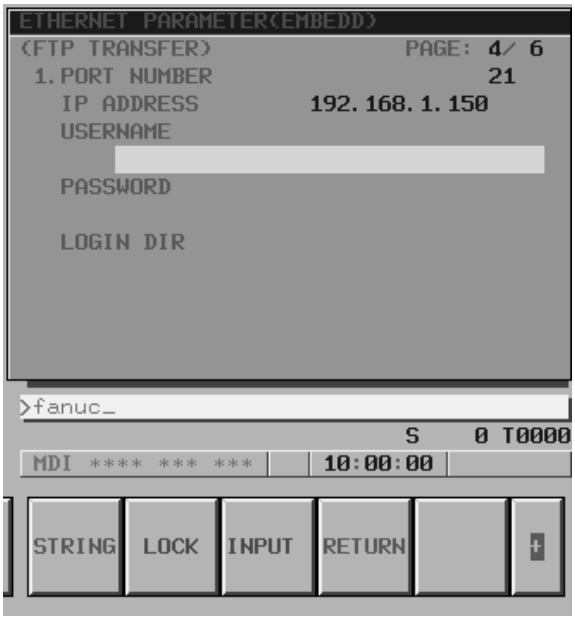

6 To enter uppercase characters, press the [LOCK] soft key.

Method of entering a long character string

The method of entering a character string longer than 32 characters for specifying a login DIR is described below.
As an example, the processing for setting the character string ”/NCDATA/NCPROGRAM/LINE001/GROUP002” is described.

Procedure

1 Place the CNC in the MDI mode.

2 Display the Ethernet parameter screen.

3 Move the cursor to LOGIN DIR with cursor keys.

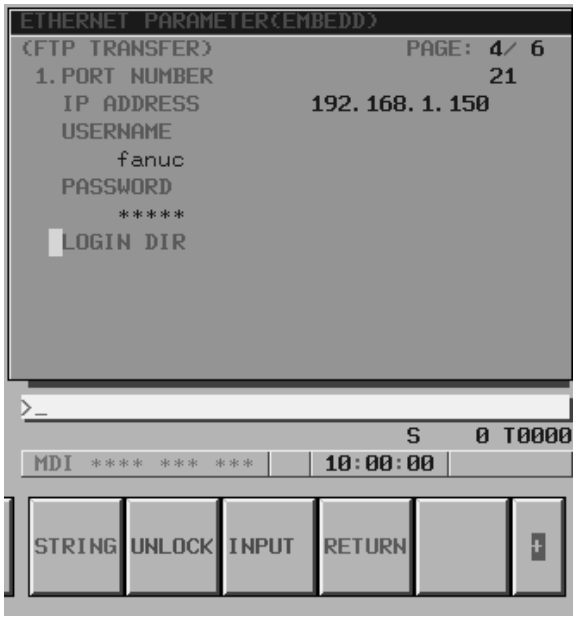

4 Press the [STRING] soft key. The cursor position and soft key display change as shown below.

5 Type ”/NCDATA/NCPROGRAM/LINE001/GROUP0” with the MDI keys, then press the [INPUT] soft key.

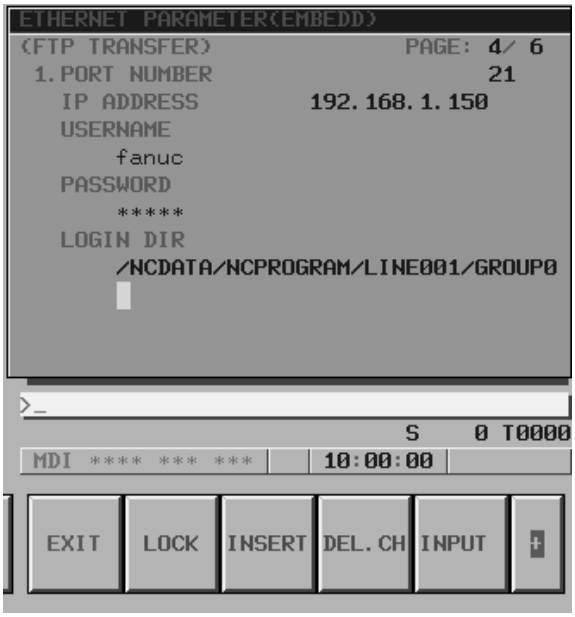

6 Next, type the remaining character string ”02” with the MDI keys, then press the [INPUT] soft key.

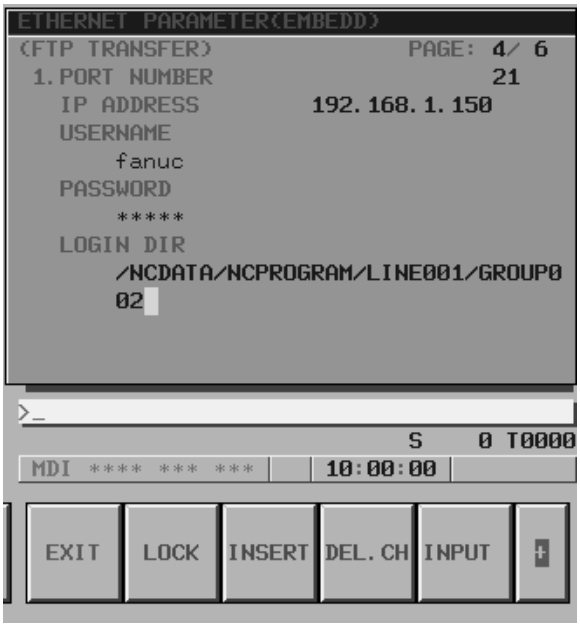

[Tip]
For example, even if the character string is divided into ”/NCDATA/NCPROGRAM” and ”/LINE001/GROUP002” for two input operations the same result can be obtained.

7 To insert ”/FACTORY0010” between ”NCPROGRAM” and ”/LINE001”, move the cursor to ”/” prefixed to ”LINE001” then type ”/FACTORY0010” with the MDI keys. Finally, press the [INSERT] soft key.

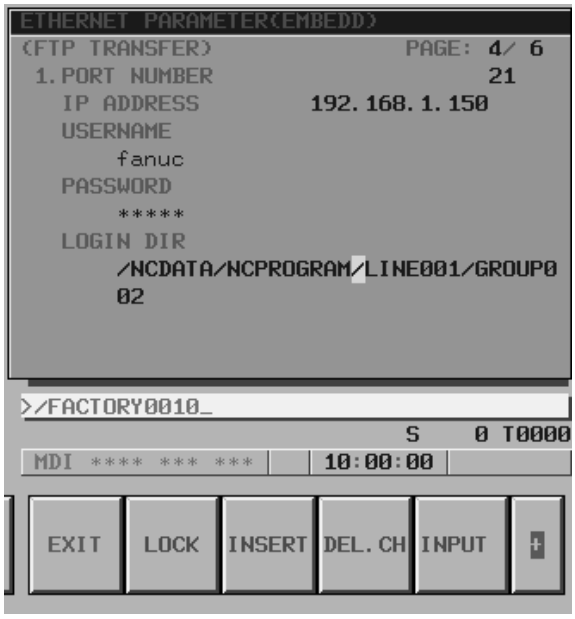

8 To delete a character, move the cursor to the character to be deleted, then press the [DEL.CH] soft key. This operation deletes a character on which the cursor is placed one at a time.

9 To overwrite a character, move the cursor to the character to be overwritten, then type a desired character with the MDI key. Finally, press the [INPUT] soft key. This operation overwrites a character on which the cursor is placed.

10 Upon completion of character string input, press the [RETURN] soft key. This operation returns the cursor position and soft key display to the state of step 1, and stores the set data in the nonvolatile memory of the CNC.

Method of entering special characters

The method of entering special characters such as ”\” unavailable with the MDI keys is described below.
As an example, the procedure for setting the character string ”PROG$” is described.

Procedure

1 Place the CNC in the MDI mode.

2 Display the Ethernet parameter screen.

3 Move the cursor to LOGIN DIR with cursor keys.

4 Type ”PROG” with the MDI keys, then press the continuous menu key at the right end of the soft key display.

NOTE

Those characters unavailable with the MDI keys that are used frequently such as :, ¥, $, and _ can be entered using soft keys. To enter a character other than these characters, set the ASCII code of the character in a parameter from parameters No. 931 through No. 935.
For details, see Subsection 17.3.3.3, ”Parameters”.

5 Press the [$] soft key.

6 Press the [INPUT] soft key.

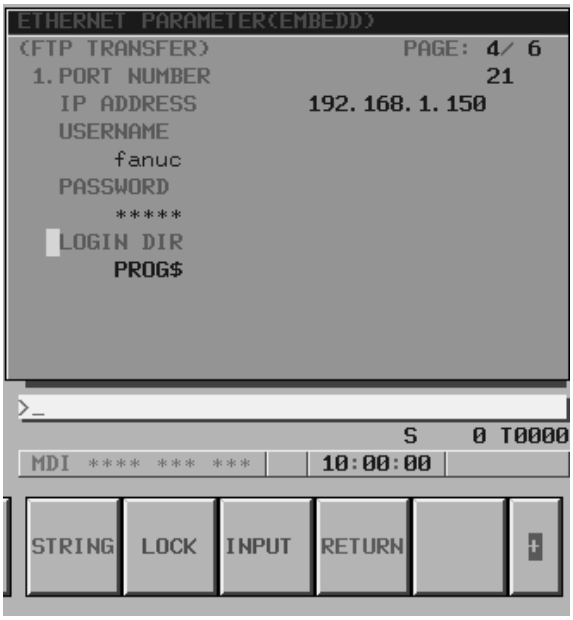

8.4 SWITCHING BETWEEN THE EMBEDDED ETHERNET DEVICES

There are two types of embedded Ethernet devices: the embedded Ethernet port and PCMCIA Ethernet card.

Screen operation is required to switch between these two types of devices.

Procedure

1 Place the CNC in the MDI mode.

2 Press the function key SYSTEM .

3 Press the continuous menu key at the right end of the soft key display.

4 Press the [ETHPRM] soft key. The Ethernet parameter setting screen appears. The Ethernet functions currently available are displayed.

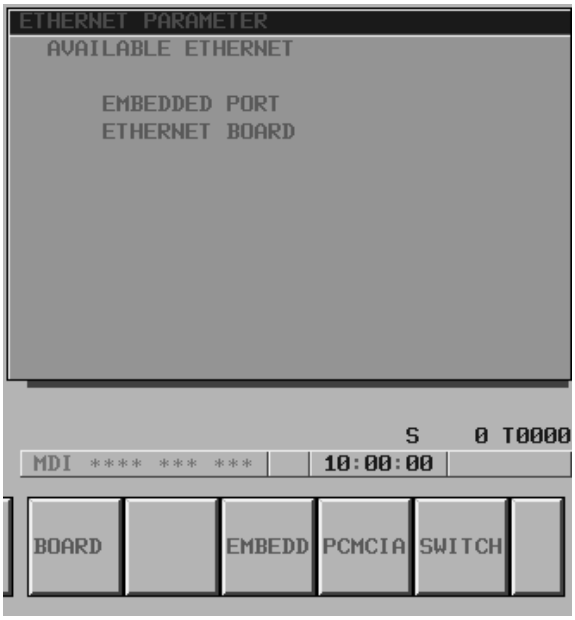

The upper row displays the usable embedded Ethernet function device.
The embedded port or PCMCIA card is displayed.
The lower row displays the usable Ethernet option boards. When no option board is installed, no information is displayed.

5 Press the [SWITCH] soft key. The screen for switching between the embedded Ethernet port and the PCMCIA Ethernet card appears.

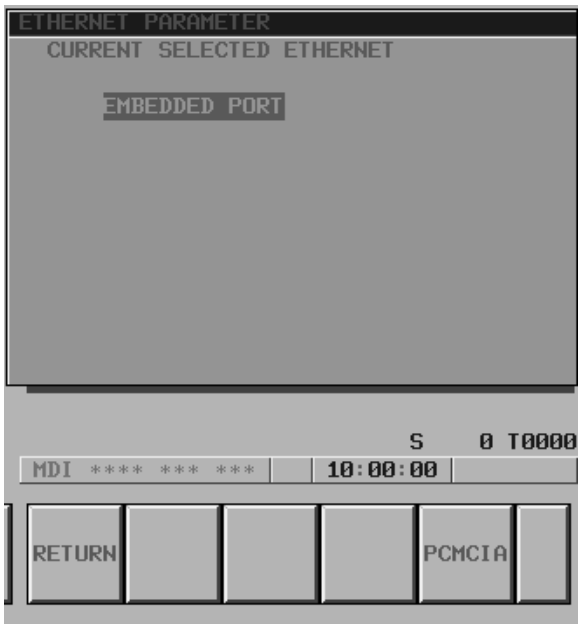

6 Press the [PCMCIA] soft key. A confirmation message appears. Press the [EXEC] soft key to switch the device.

NOTE

Information about the switched device is stored in the nonvolatile memory.

So, when you turn on the power next time, the previously selected device can be used directly.

8.5 EMBEDDED ETHERNET OPERATIONS

This section describes the operation required of each embedded Ethernet function.

8.5.1 FACTOLINK Function

The operation of the FACTOLINK function is described below.

Display

Procedure

1 Press the function key

.

2 Press the continuous menu key at the right end of the soft key display.

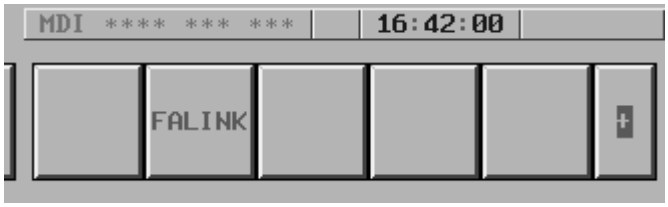

3 Press the [FALINK] soft key. The FACTOLINK screen appears. The screen shown below is a sample FACTOLINK screen.

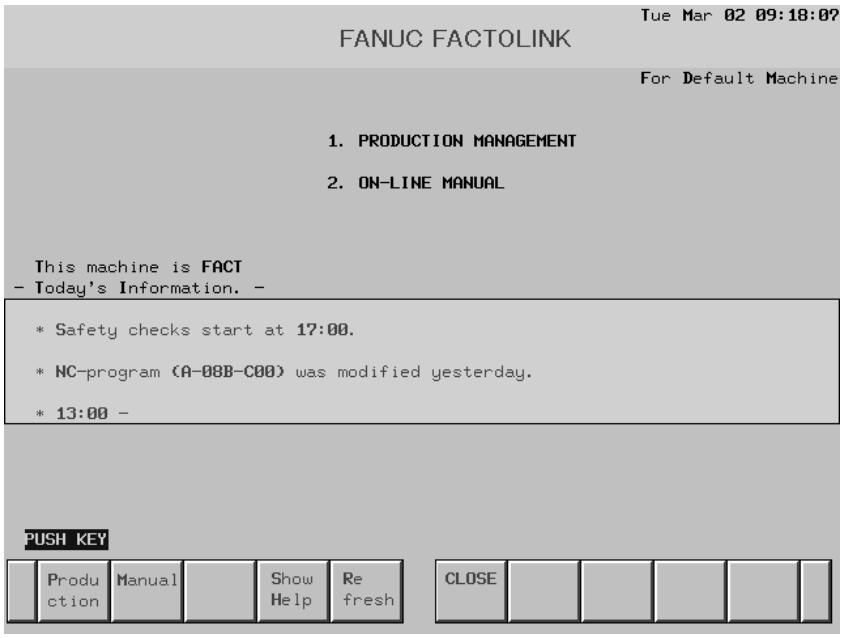

8.5.2 FTP File Transfer Function

The operation of the FTP file transfer function is described below.

8.5.2.1 Host file list display

A list of the files held on the hard disk embedded to the host computer is displayed.

Procedure

1 Press the function key PROG .

2 Press the continuous menu key at the right end of the soft key display.

3 Press the [HOST] soft key. The host file list screen appears. The Ethernet functions currently available are displayed.

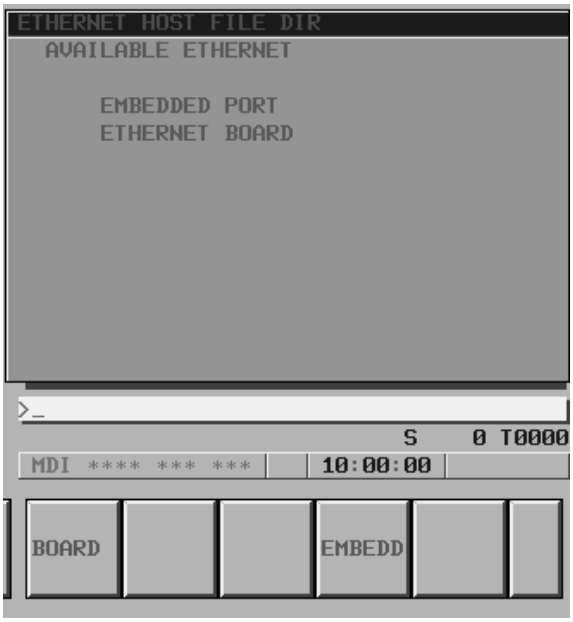

The upper row displays the usable embedded Ethernet function device.
The embedded port or PCMCIA card is displayed.
The lower row displays the usable Ethernet option boards. When no option board is installed, no information is displayed.

4 When you press the [EMBEDD] soft key, a list of the files held on the host computer specified with the embedded Ethernet port is displayed. If the usable embedded Ethernet function device is the PCMCIA card, the [PCMCIA] soft key is displayed instead of the [EMBEDD] soft key. When you press the [PCMCIA] soft key, a list of the files held on the host computer specified with the PCMCIA Ethernet card is displayed.

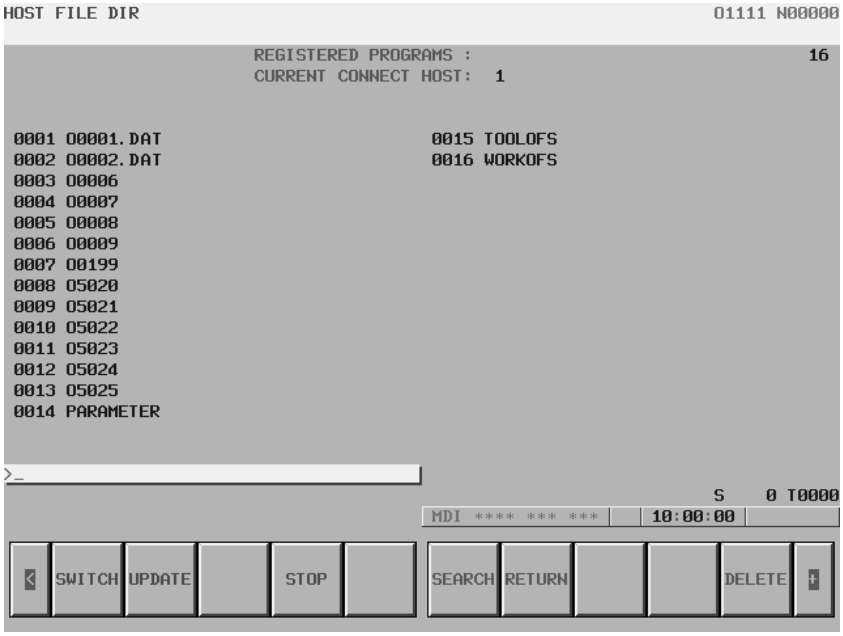

NOTE

Depending on the FTP server software, the number of displayed programs may differ between the host file list screen above and the host file list (detail) screen described below.

5 When a list of files is larger than one page, the screen display can be switched using the page keys PAGE ↑ PAGE ↓ .

6 Press the [UPDATE] soft key to update the screen display.

7 Press the [SWITCH] soft key. The host file list (detail) screen appears.

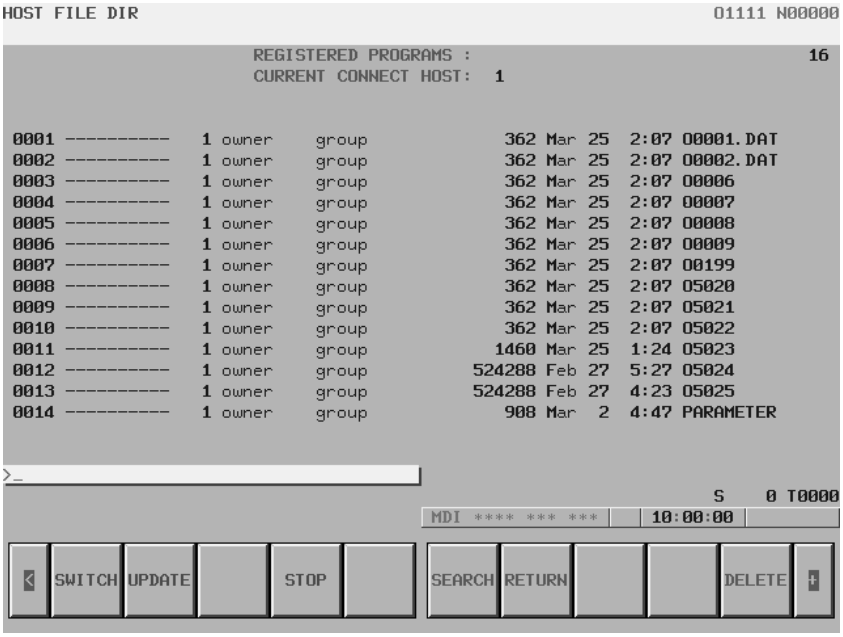

NOTE
The host file list (detail) screen shown above is an example of screen display, and information displayed may vary according to the specification of the FTP server used with the host computer.

Display items

- **Number of registered program files** — The number of files registered in the directory (folder) of the host computer currently connected is displayed.
- **Currently connected host** — The number of the host currently connected is displayed.

List of operations

- **SWITCH** — This operation switches between normal display and detail display.
- **UPDATE** — This operation updates information displayed.
- **STOP** — This operation stops [SEARCH] operation.
- **SEARCH** — This operation updates screen information so that a file specified by its file number is placed at the start of the list.
- **DELETE** — This operation deletes a file held on the hard disk embedded to the host computer.
- **READ** — This operation reads a file held on the hard disk embedded to the host computer to the CNC part program storage. This soft key is displayed only when 9 is set as the input/output device number of the CNC, and the CNC is placed in the EDIT mode.
- **PUNCH** — This operation outputs a file held in the CNC part program storage to the hard disk embedded to the host computer. This soft key is displayed only when 9 is set as the input/output device number of the CNC, and the CNC is placed in the EDIT mode.

8.5.2.2 Host file search

When a list of the files held on the hard disk embedded to the host computer is displayed, a file can be placed at the start of the list by specifying its file number.

Procedure

1 Display the host file list screen.
2 Press the [SEARCH] soft key.
3 Type the file number of a file to be displayed at the start of the list with the MDI keys.
[Input format]
<file–number>
4 Press the [EXEC] soft key.
5 During search, ”SEARCH” blinks in the lower–right corner of the screen.

8.5.2.3 Host file deletion

A file held on the hard disk embedded to the host computer can be deleted.

Procedure

1 Display the host file list screen.
2 Press the [DELETE] soft key.
3 Type the file number or file name of a file to be deleted, with the MDI keys.
[Input format]
<file–number>
or
<file–name>
4 Press the [EXEC] soft key.
5 During deletion, ”DELETE” blinks in the lower–right corner of the screen.

NOTE
1 When a file number is used for deletion, only a file displayed on the host file list screen can be deleted.
2 The information displayed at the right end of the host file list (detail) screen is recognized as a file name. So, when deleting a host file from the host file list (detail) screen by specifying its file number, check that a file name is displayed at the right end of the screen, before specifying the file number.

8.5.2.4 NC program input

A file (NC program) on the host computer can be read to the CNC memory.

For the host file list screen

Procedure

1 Place the CNC in the EDIT mode.
2 Display the host file list screen.
3 Press the [READ] soft key.
4 Type the file number or file name of an NC program to be input, with the MDI keys.
[Input format]
<file–number>
or
<file–name>
5 Press the [EXEC] soft key.
6 During input, ”INPUT” blinks in the lower–right corner of the screen.

CAUTION
1 If the CNC memory holds an NC program that has the same O number as that of an NC program to be input, the NC program in the CNC memory is overwritten when bit 2 of parameter No. 3201 is set to 1.
2 If an NC program is input when bit 0 of parameter No. 3201 is set to 1, all NC programs in the CNC memory are automatically deleted before NC program input.

[Example of use]
When a file with the file name O0001.DAT held on the hard disk embedded to the host computer is to be input to the CNC memory, enter O001.DAT. Note, however, that the O number input to the CNC memory depends on the O number described in the file named O0001.DAT.

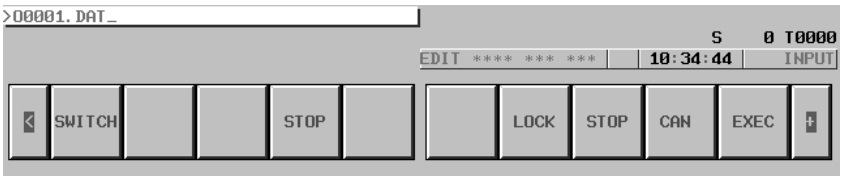

NOTE
When a file is input from this screen to the CNC memory, the O number described in the file is input.

For the program screen

Procedure

1 Place the CNC in the EDIT mode.

2 Press the function key PROG .

3 Press the continuous menu key at the right end of the soft key display.

4 Press the [PRGRM] soft key. The program screen appears.

5 Press the [(OPRT)] soft key.

6 Press the continuous menu key at the right end of the soft key display.

7 Press the [READ] soft key.

8 Type the O number of an NC program to be input, with the MDI keys.
[Input format]
<O–number>

9 Press the [EXEC] soft key.

10 During input, ”INPUT” blinks in the lower–right corner of the screen.

CAUTION
1 If the CNC memory holds an NC program that has the same O number as that of an NC program to be input, the NC program in the CNC memory is overwritten when bit 2 of parameter No. 3201 is set to 1.
2 If an NC program is input when bit 0 of parameter No. 3201 is set to 1, all NC programs in the CNC memory are automatically deleted before NC program input.

NOTE
The valid O number of a file to be input to the CNC memory is Oxxxx (with xxxx representing a number) only.

8.5.2.5 NC program output

A file (NC program) in the CNC memory can be output to the host computer.

For the host file list screen

Procedure

1 Place the CNC in the EDIT mode.

2 Display the host file list screen.

3 Press the [PUNCH] soft key.

4 Type the O number of an NC program to be output, with the MDI keys.
[Input format]
<O–number>

5 Press the [EXEC] soft key.
6 During output, ”OUTPUT” blinks in the lower–right corner of the screen.

[Example of use]
When an NC program (O0001) in the CNC memory is to be output to the hard disk embedded to the host computer, enter O0001.

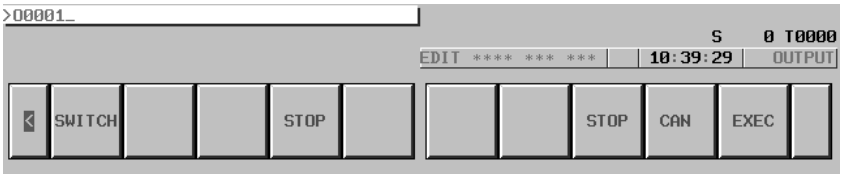

NOTE
An outputted file name is Oxxxx.

For the program screen

Procedure

1 Place the CNC in the EDIT mode.
2 Press the function key PROG .
3 Press the continuous menu key at the right end of the soft key display.
4 Press the [PRGRM] soft key. The program screen appears.
5 Press the [(OPRT)] soft key.
6 Press the continuous menu key at the right end of the soft key display.
7 Press the [PUNCH] soft key.
8 Type the O number of an NC program to be output, with the MDI keys.
[Input format]
<O–number>
9 Press the [EXEC] soft key.
10 During output, ”OUTPUT” blinks in the lower–right corner of the screen.

NOTE
An outputted file name is Oxxxx.

8.5.2.6 Input/output of various types of data

With the FTP file transfer function, the types of data listed below can be input/output. This subsection describes the input/output method.

A) NC parameter
B) Tool offset value
C) Custom macro variable
D) Workpiece offset offset value
E) Pitch error compensation data
F) M code group
G) Operation history data

Parameter input

The file (NC parameter) on the host computer can be input to the CNC memory.

Procedure

1 Place the CNC in the EDIT mode.
2 Press the function key SYSTEM .
3 Press the continuous menu key at the right end of the soft key display.
4 Press the [PARAM] soft key. The parameter screen appears.
5 Press the [(OPRT)] soft key.
6 Press the continuous menu key at the right end of the soft key display.
7 Press the [READ] soft key.
8 Press the [EXEC] soft key.
9 During input, ”INPUT” blinks in the lower–right corner of the screen.

File name

The fixed file name PRAMETER is used.

File format, restrictions

Refer to the operator’s manual of each CNC.

Parameter output

The file (NC parameter) in the CNC memory can be output to the host computer.

Procedure

1 Place the CNC in the EDIT mode.
2 Press the function key SYSTEM .
3 Press the continuous menu key at the right end of the soft key display.
4 Press the [PARAM] soft key. The parameter screen appears.
5 Press the [(OPRT)] soft key.
6 Press the continuous menu key at the right end of the soft key display.
7 Press the [PUNCH] soft key.

8 Press the [EXEC] soft key.
9 During output, ”OUTPUT” blinks in the lower–right corner of the screen.

File name

The fixed file name PRAMETER is used.

File format, restrictions

Refer to the operator’s manual of each CNC.

Tool offset value input

The file (tool offset value) on the host computer can be input to the CNC memory.

Procedure

1 Place the CNC in the EDIT mode.
2 Press the function key

.
3 Press the continuous menu key at the right end of the soft key display.
4 Press the [OFFSET] soft key. The tool compensation screen appears.
5 Press the [(OPRT)] soft key.
6 Press the continuous menu key at the right end of the soft key display.
7 Press the [READ] soft key.
8 Press the [EXEC] soft key.
9 During input, ”INPUT” blinks in the lower–right corner of the screen.

File name

The fixed file name TOOLOFS is used.

File format, restrictions

Refer to the operator’s manual of each CNC.

Tool offset value output

The file (tool offset value) in the CNC memory can be output to the host computer.

Procedure

1 Place the CNC in the EDIT mode.
2 Press the function key

.
3 Press the continuous menu key at the right end of the soft key display.
4 Press the [OFFSET] soft key. The tool compensation screen appears.
5 Press the [(OPRT)] soft key.
6 Press the continuous menu key at the right end of the soft key display.
7 Press the [PUNCH] soft key.
8 Press the [EXEC] soft key.
9 During output, ”OUTPUT” blinks in the lower–right corner of the screen.

File name The fixed file name TOOLOFS is used.

File format, restrictions Refer to the operator's manual of each CNC.

Workpiece origin offset value input

The file (workpiece origin offset value) on the host computer can be input to the CNC memory.

Procedure

1 Place the CNC in the EDIT mode.

2 Press the function key

.

3 Press the continuous menu key at the right end of the soft key display.

4 Press the [WORK] soft key. The workpiece coordinate system setting screen appears.

5 Press the [(OPRT)] soft key.

6 Press the continuous menu key at the right end of the soft key display.

7 Press the [READ] soft key.

8 Press the [EXEC] soft key.

9 During input, "INPUT" blinks in the lower–right corner of the screen.

File name The fixed file name WORKOFS is used.

File format, restrictions Refer to the operator's manual of each CNC.

Workpiece origin offset value output

The file (workpiece origin offset value) in the CNC memory can be output to the host computer.

Procedure

1 Place the CNC in the EDIT mode.

2 Press the function key

.

3 Press the continuous menu key at the right end of the soft key display.

4 Press the [WROK] soft key. The workpiece coordinate system setting screen appears.

5 Press the [(OPRT)] soft key.

6 Press the continuous menu key at the right end of the soft key display.

7 Press the [PUNCH] soft key.

8 Press the [EXEC] soft key.

9 During output, "OUTPUT" blinks in the lower–right corner of the screen.

File name The fixed file name WORKOFS is used.

File format, restrictions Refer to the operator's manual of each CNC.

Pitch error compensation input

The file (pitch error compensation) on the host computer can be input to the CNC memory.

Procedure

1 Place the CNC in the EDIT mode.
2 Press the function key SYSTEM .
3 Press the continuous menu key at the right end of the soft key display.
4 Press the [PITCH] soft key. The pitch error setting screen appears.
5 Press the [(OPRT)] soft key.
6 Press the continuous menu key at the right end of the soft key display.
7 Press the [READ] soft key.
8 Press the [EXEC] soft key.
9 During input, ”INPUT” blinks in the lower–right corner of the screen.

File name

The fixed file name PITCH is used.

File format, restrictions

Refer to the operator’s manual of each CNC.

Pitch error compensation output

The file (pitch error compensation) in the CNC memory can be output to the host computer.

Procedure

1 Place the CNC in the EDIT mode.
2 Press the function key SYSTEM .
3 Press the continuous menu key at the right end of the soft key display.
4 Press the [PITCH] soft key. The pitch error setting screen appears.
5 Press the [(OPRT)] soft key.
6 Press the continuous menu key at the right end of the soft key display.
7 Press the [PUNCH] soft key.
8 Press the [EXEC] soft key.
9 During output, ”OUTPUT” blinks in the lower–right corner of the screen.

File name

The fixed file name PITCH is used.

File format, restrictions

Refer to the operator’s manual of each CNC.

M code group input

The file (M code group) on the host computer can be input to the CNC memory.

Procedure

1 Place the CNC in the EDIT mode.

2 Press the function key SYSTEM .

3 Press the continuous menu key at the right end of the soft key display.

4 Press the [M–CODE] soft key. The M code group setting screen appears.

5 Press the [(OPRT)] soft key.

6 Press the continuous menu key at the right end of the soft key display.

7 Press the [READ] soft key.

8 Press the [EXEC] soft key.

9 During input, ”INPUT” blinks in the lower–right corner of the screen.

File name

The fixed file name M–CODE is used.

File format, restrictions

Refer to the operator’s manual of each CNC.

M code group output

The file (M code group) in the CNC memory can be output to the host computer.

Procedure

1 Place the CNC in the EDIT mode.

2 Press the function key SYSTEM .

3 Press the continuous menu key at the right end of the soft key display.

4 Press the [M–CODE] soft key. The M code group setting screen appears.

5 Press the [(OPRT)] soft key.

6 Press the continuous menu key at the right end of the soft key display.

7 Press the [PUNCH] soft key.

8 Press the [EXEC] soft key.

9 During output, ”OUTPUT” blinks in the lower–right corner of the screen.

File name

The fixed file name M–CODE is used.

File format, restrictions

Refer to the operator’s manual of each CNC.

Operation history data input

The file (operation history data) on the host computer can be input to the CNC memory.

Procedure

1 Place the CNC in the EDIT mode.

2 Press the function key SYSTEM .

3 Press the continuous menu key at the right end of the soft key display.

4 Press the [OPEHIS] soft key. The operation history screen appears.

5 Press the [(OPRT)] soft key.

6 Press the continuous menu key at the right end of the soft key display.

7 Press the [READ] soft key.

8 Press the [EXEC] soft key.

9 During input, ”INPUT” blinks in the lower–right corner of the screen.

File name

The fixed file name HISTORY is used.

File format, restrictions

Refer to the operator’s manual of each CNC.

Operation history data output

The file (operation history data) in the CNC memory can be output to the host computer.

Procedure

1 Place the CNC in the EDIT mode.

2 Press the function key SYSTEM .

3 Press the continuous menu key at the right end of the soft key display.

4 Press the [OPEHIS] soft key. The operation history screen appears.

5 Press the [(OPRT)] soft key.

6 Press the continuous menu key at the right end of the soft key display.

7 Press the [PUNCH] soft key.

8 Press the [EXEC] soft key.

9 During output, ”OUTPUT” blinks in the lower–right corner of the screen.

File name

The fixed file name HISTORY is used.

File format, restrictions

Refer to the operator’s manual of each CNC.

8.5.2.7 Checking and changing of the connection host

Procedure

The host computer to which the FTP file transfer function attempts to make a connection as the current communication destination can be checked.

1 Press the function key PROG .

2 Press the continuous menu key at the right end of the soft key display.

3 Press the [CONECT] soft key. The connection host change screen appears. The Ethernet functions currently available are displayed.

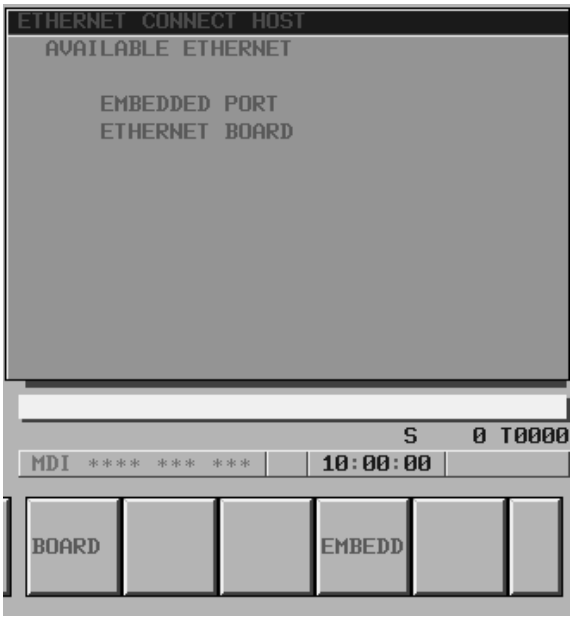

The upper row displays the usable embedded Ethernet function device.
The embedded port or PCMCIA card is displayed.
The lower row displays the usable Ethernet option boards. When no option board is installed, no information is displayed.

4 When you press the [EMBEDD] soft key, a list of the connection host computers specified with the embedded Ethernet port is displayed.
If the usable embedded Ethernet function device is the PCMCIA card, the [PCMCIA] soft key is displayed instead of the [EMBEDD] soft key. When you press the [PCMCIA] soft key, a list of the connection host computers specified with the PCMCIA Ethernet card is displayed.

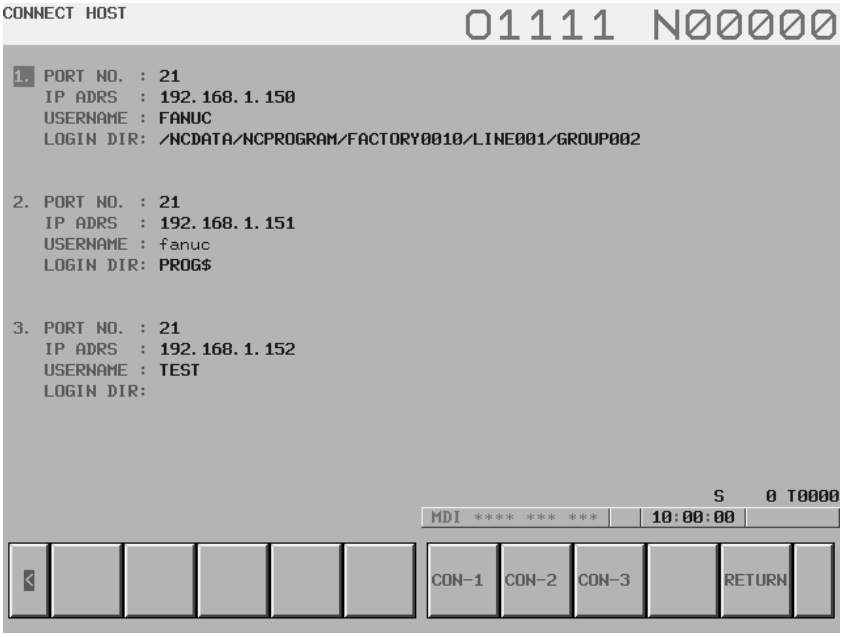

NOTE
The title of the host computer that is the current communication destination of the embedded Ethernet is displayed in reverse video.

5 The connected host can be changed by pressing the [CON–1], [CON–2], or [CON–3] soft key.

Display items

- **Port number, IP address, user name, login DIR** — Those values that are set on the Ethernet parameter setting screen are displayed.

List of operations

- **CON–1** — This operation changes the connected host to host 1.
- **CON–2** — This operation changes the connected host to host 2.
- **CON–3** — This operation changes the connected host to host 3.

8.6 EMBEDDED ETHERNET ERROR MESSAGE SCREEN

If an error occurs with each function of the embedded Ethernet function, the error message screen for the embedded Ethernet function displays an error message.

Display

Procedure

1 Press the function key MESSAGE .

2 Press the continuous menu key at the right end of the soft key display.

3 Press the [ETHLOG] soft key. The Ethernet log screen appears. The Ethernet functions currently available are displayed.

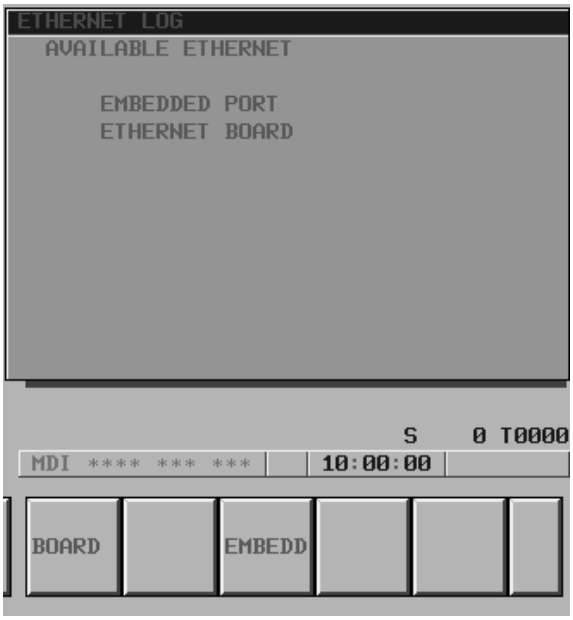

The upper row displays the usable embedded Ethernet function device.
The embedded port or PCMCIA card is displayed.
The lower row displays the usable Ethernet option boards. When no option board is installed, no information is displayed.

4 By pressing the [EMBEDD] soft key or the [PCMCIA] soft key, the error message screen for the embedded Ethernet function can be displayed.
The error message screen does not differ between the embedded Ethernet port and PCMCIA Ethernet card. The same screen is shared.

5 Switch the screen display with the page keys 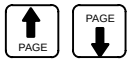 .

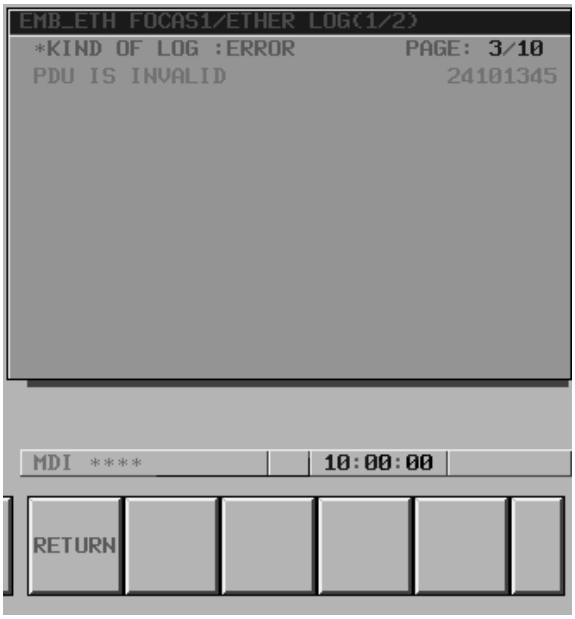

[Tip]
The latest error message is displayed at the top of the screen. To the right of an error message, the date and time data of the occurrence of the error is displayed. The format of date and time data is ddhhmmss where dd represents a day, hh represents hours, mm represents minutes, and ss represents seconds.

Configuration

The embedded Ethernet log screen consists of the screens below.

(1) EMB_ETH MASTER CTRL LOG screen (2 screens)
Log screen used to set the parameters of the embedded Ethernet function and display error messages at the time of embedded Ethernet initialization

(2) EMB_ETH FOCAS1/ETHER LOG screen (2 screens)
Log screen used to display error messages related to the FOCAS1/Ethernet function (DNC1/Ethernet function)

(3) EMB_ETH PMC LOG screen (2 screens)
Log screen used to display error messages related to the PMC online monitor functions such as FAPT LADDER–III

(4) EMB_ETH FACTOLINK LOG screen (2 screens)
Log screen used to display error messages related to the FACTOLINK function

(5) EMB_ETH FTP TRANSFER LOG screen (2 screens)
Log screen used to display error messages related to the FTP file transfer function

8.7 EMBEDDED ETHERNET MAINTENANCE SCREEN

With the embedded Ethernet function, a dedicated maintenance screen is available.
The maintenance screen enables operations to be checked when the embedded Ethernet function operates abnormally.

Display

Procedure

1 Press the function key SYSTEM .

2 Press the continuous menu key at the right end of the soft key display.

3 Press the [ETHMNT] soft key. The Ethernet maintenance screen appears. The Ethernet functions currently available are displayed.

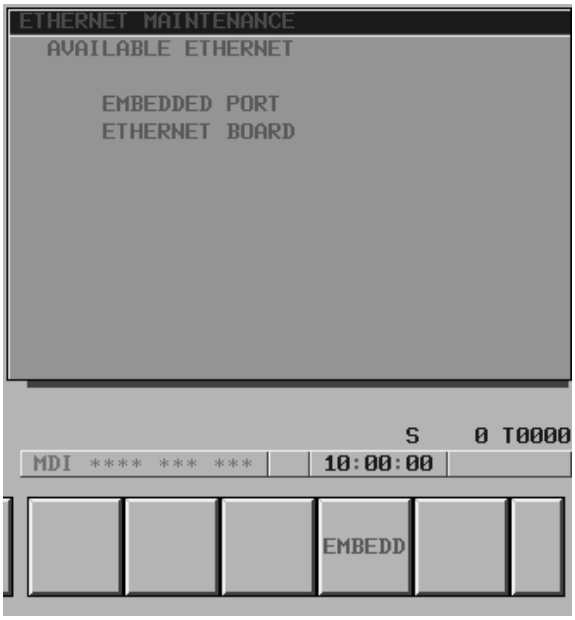

The upper row displays the usable embedded Ethernet function device.
The embedded port or PCMCIA card is displayed.
The lower row displays the usable Ethernet option boards. When no option board is installed, no information is displayed.

4 By pressing the [EMBEDD] soft key or the [PCMCIA] soft key, the maintenance screen for the embedded Ethernet function can be displayed.
The maintenance screen does not differ between the embedded Ethernet port and PCMCIA Ethernet card. The same screen is shared.

5 Switch the screen display with the page keys PAGE PAGE .

6 The screen below is used to check the state of the communication cable and whether a communication destination exists.
Enter the IP address of a communication destination through MDI keys, then press the [PING] soft key. Communication is performed three times with the specified communication destination, and the results are displayed.

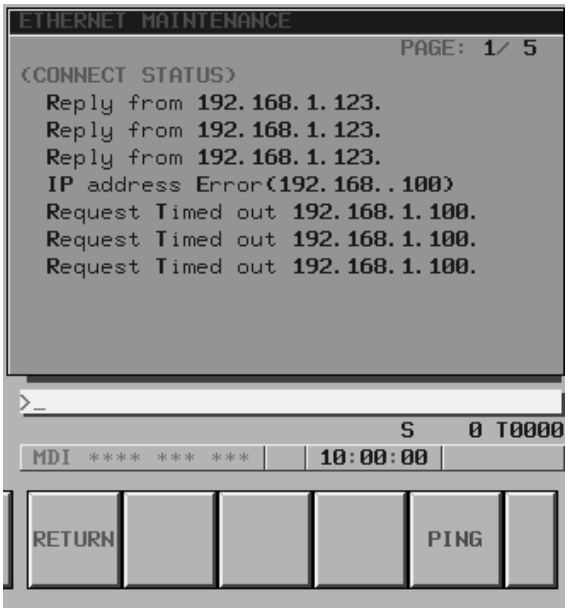

Messages displayed:

Reply from IP–address

This message indicates that a response was received from the specified communication destination and that the specified communication destination exists on the network.

Request Timed out IP–address

This message indicates that no response was received from the specified communication destination and that the specified communication destination does not exist on the network.
Check if the power to the communication destination equipment is turned on. Check also the parameter settings and network installation for errors.

IP address Error (IP–address)

The specified IP address is incorrect. Check the entered IP address.

7 The screen below is used to check the communication state of the embedded Ethernet function and the error detection count of the Ethernet controller.

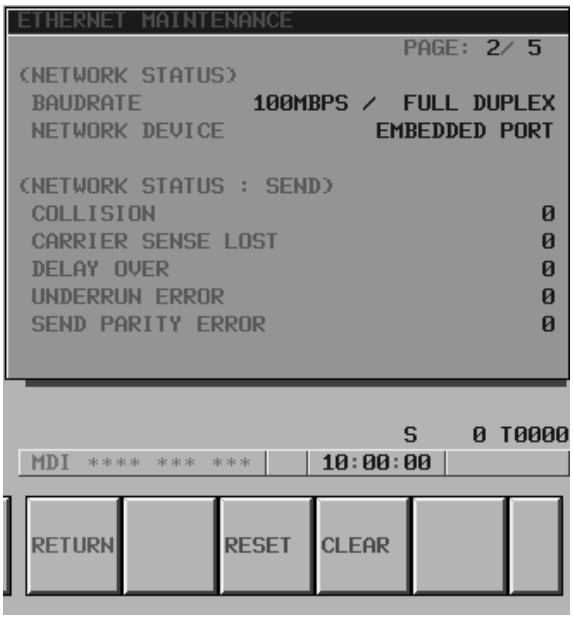

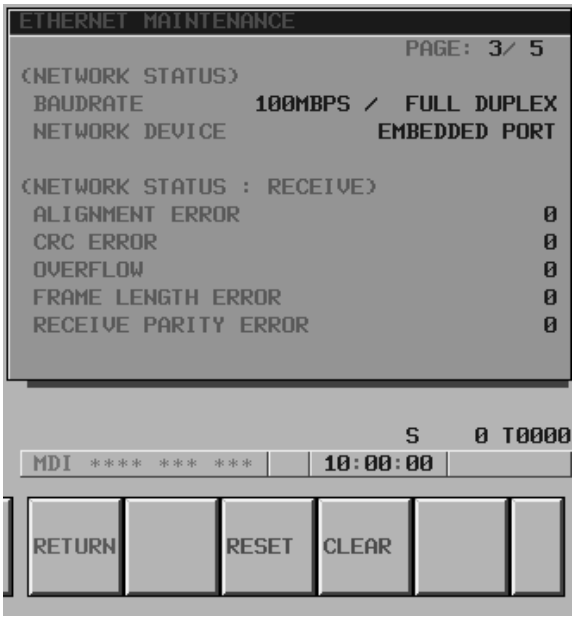

The screen consists of two pages: one page for an error detection count for transmission, and the other for an error detection count for reception.

By pressing the [CLEAR] soft key, the error detection counters for transmission and reception can be cleared to 0.

By pressing the [RESET] soft key, the current communication device can be initialized and communication can be performed from the initial state. Use this key to reset communication based on the embedded Ethernet function.

8 The screen below is used to check the state of each task of the embedded Ethernet function.

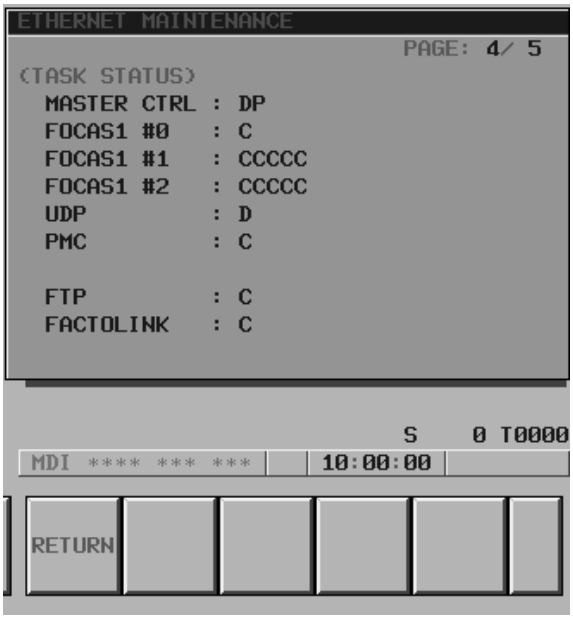

	Symbol	Meaning
MASTER CTRL	E	Ethernet controller being initialized
	D	Data being processed(NOTE)
	W	Waiting for data processing(NOTE)
	P	Waiting for parameter setting
	S	Parameters being set
FOCAS1 #0	X	Waiting for completion of Ethernet controller initialization
	E	Being activated
	C	Waiting for connection from the personal computer
	O	Connection being processed
	N	FOCAS1/Ethernet execution disabled
FOCAS1 #1,#2	X	Waiting for completion of Ethernet controller initialization
	C	Waiting for connection from the personal computer
	D	Data being processed(NOTE)
	W	Waiting for data processing(NOTE)
UDP	X	Not executed yet. Waiting for completion of Ethernet controllerinitialization.
	E	Being activated
	D	Data being processed(NOTE)
	W	Waiting for data processing(NOTE)

	Symbol	Meaning
PMC	X	Waiting for completion of Ethernet controller initialization
	D	Data being processed(NOTE)
	W	Waiting for data processing(NOTE)
FTP	X	Waiting for completion of Ethernet controller initialization
	D	Data being processed(NOTE)
	W	Waiting for data processing(NOTE)
FACTOLINK	X	Waiting for completion of Ethernet controller initialization
	D	Data being processed(NOTE)
	W	Waiting for data processing(NOTE)

NOTE
A state change occurs between the states ”Data being processed” and ”Waiting for data processing” even when communication is not performed actually.

9 Information about the interface between the FTP file transfer function and CNC is displayed.

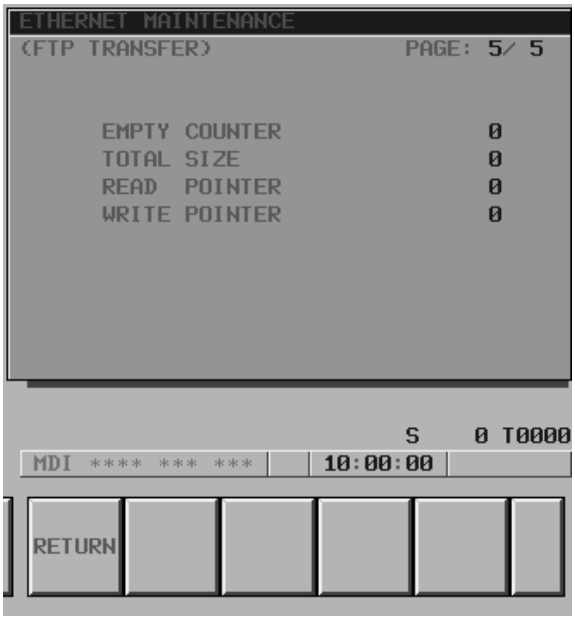

Item	Description
EMPTY COUNTER	Indicates a buffer empty count during NC program transfer from the FTP file transfer function to the CNC. This counter is initialized to 0 at power–on, then is incremented each time a certain condition is satisfied.
TOTAL SIZE	Indicates the total number of bytes transferred when one NC program is transferred using the FTP file transfer function.
READ POINTER WRITE POINTER	Indicates internal buffer management information when the FTP file transfer function is used.

8.8 TROUBLESHOOTING

This section describes troubleshooting and check items associated with the embedded Ethernet function.

8.8.1 Check Items Related to Connection with the Hub

1) Is an STP cable used for connection between the hub and embedded Ethernet?
2) Is the STP cable connected correctly?
   In general, a straight cable is used for connection between the hub and communication device.
3) Is the power to the hub turned on?
4) The PCMCIA Ethernet card is used only with 10BASE–T. Is a hub for 10BASE–T used when the PCMCIA Ethernet card is used?
5) Is the link LED turned on when the embedded Ethernet port is used?
   The link LED is not turned on when the hub is not connected or the power to the hub is not turned on.
6) Is the LED (for link display) of the connected hub turned on?
   (Some hubs are not provided with a link LED.)

   The LED is not turned on when the hub is not connected with the embedded Ethernet or the power to the CNC is not turned on.

8.8.2 Check Items Related to Connection with a Backbone

This subsection can be ignored when a network is built only with a hub to which the embedded Ethernet is connected.
The general check items are listed below. For network installation, consult with vendors specialized in this area. Install cables away from noise sources.

When a 10BASE–5 backbone is used

1) Are transceivers connected to the backbone cable correctly?
   - If the transceivers are connected correctly, the resistance between the backbone shield and central conductor is about 25 ohms (when terminating resistors are attached).
   - A special tool may be required for transceiver installation. (The special tool varies from one vendor to another. For details, refer to the relevant manual of each vendor.)
   - At a location where a transceiver was once installed, do not install a transceiver again. (The backbone cable can be damaged.)
2) Are transceivers installed at correct intervals?
   - Transceivers need to be spaced from each other by 2.5 m or more. It is recommended that transceivers be installed at intervals of an integral multiple of 2.5 m. Usually, installation locations are marked on a backbone cable.
3) Are terminating resistors attached?
   - A terminating resistor (50 ohms) needs to be attached to each end of the backbone cable.

4) Is the length of the backbone cable 500 m or less?
5) Does the cable (transceiver cable) connecting a hub to a transceiver satisfy the specified length?
   - Usually, the maximum allowable length of a transceiver cable is 50 m. However, the maximum allowable length of some thin cables may be less than 50 m. Check the specification of the cable.

When a 10BASE–2 backbone is used

1) Is the length of one cable 0.5 m or more?
   - The minimum allowable span between nodes (devices) is 0.5 m.
2) Is the length of the backbone cable (total length of the cables) 185 m or less?
3) Are terminating resistors attached?
   - A terminating resistor (50 ohms) needs to be attached to each end of the backbone cable.

8.8.3 Checking the Setting of Each Parameter

This subsection describes how to check the minimum settings required for communication.

Checking the settings on the embedded Ethernet side

1) Is the MAC address of the embedded Ethernet displayed?
   - The MAC address of a embedded Ethernet port is set for each CNC, and can be checked on the parameter setting screen.
   - A unique MAC address is assigned to each PCMCIA Ethernet card. When a PCMCIA Ethernet card is selected and inserted, MAC address display is provided.
2) Is a correct IP address set?
   - Check if an IP address already specified for another device is set.
3) Is a correct subnet mask set?
   - The subnet mask setting must match the subnet mask setting on the communication destination device.
4) Is a correct router IP address set when communication via a router is performed?

Checking the settings on the personal computer side

1) Is a correct IP address set?
   - Check if an IP address already specified for another device is set.
2) Is a correct subnet mask set?
   - The subnet mask setting must match the subnet mask setting on the communication destination device.
3) Is a correct router IP address set when communication via a router is performed?

8.8.4 Checking Communication

This subsection describes how to check the state of communication between the CNC and personal computer.

Checking the connection status and settings

If communication with the CNC is not satisfactory or fails from time to time, check the communication link by using the method described below. The ping command is used to check communication.

Checking from the embedded Ethernet side

See Item 6 of Section 3.2, ”EMBEDDED ETHERNET MAINTENANCE SCREEN”.

If no response is received from the remote device, the cause is considered to be a hardware connection error and/or software setting error. Check the hardware connection and software settings.

Checking from the personal computer side

An example where a personal computer (OS: Windows NT 4.0) is used is described below.

Method of checking:

Open the command prompt, then enter ”ping NC–IP–address”. A normal connection has been established if a response is received.
The example below supposes that the IP address of the CNC is 192.168.1.1.

1) When a response is received (normal)

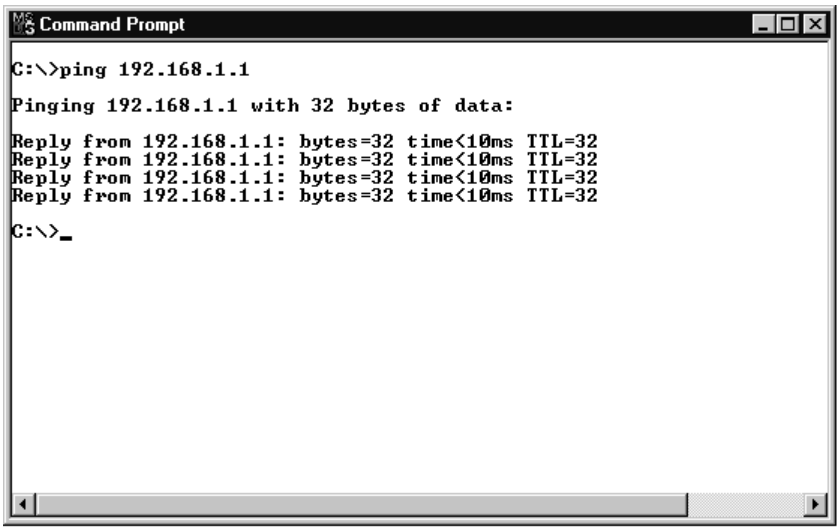

2) When no response is received (error)

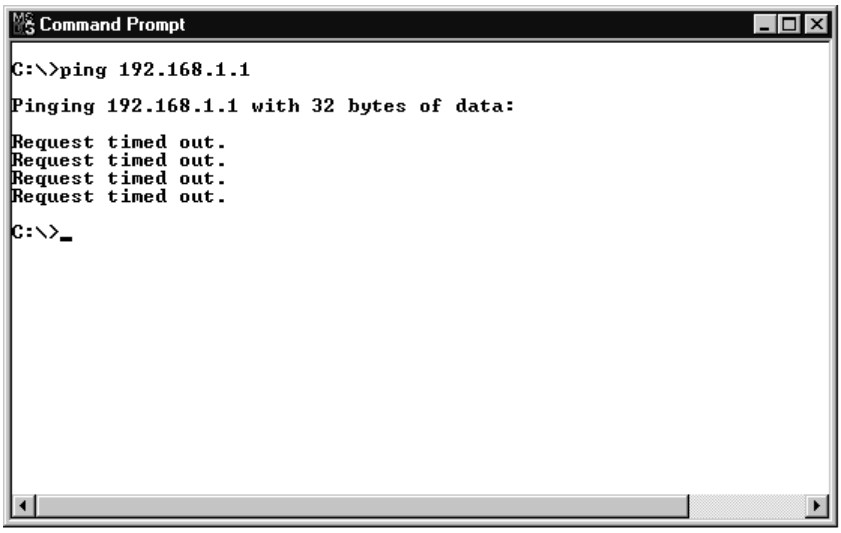

If no response is received from the CNC, the cause is considered to be a hardware connection error and/or software setting error. Check the hardware connection and software settings.

Checking the influence of noise

The method of checking communication errors caused by noise is described below.
The ping command is used for this checking as well.

The –t option of the ping command is used. Until the ”Ctrl + C” keys are pressed simultaneously, ping packets are transmitted.

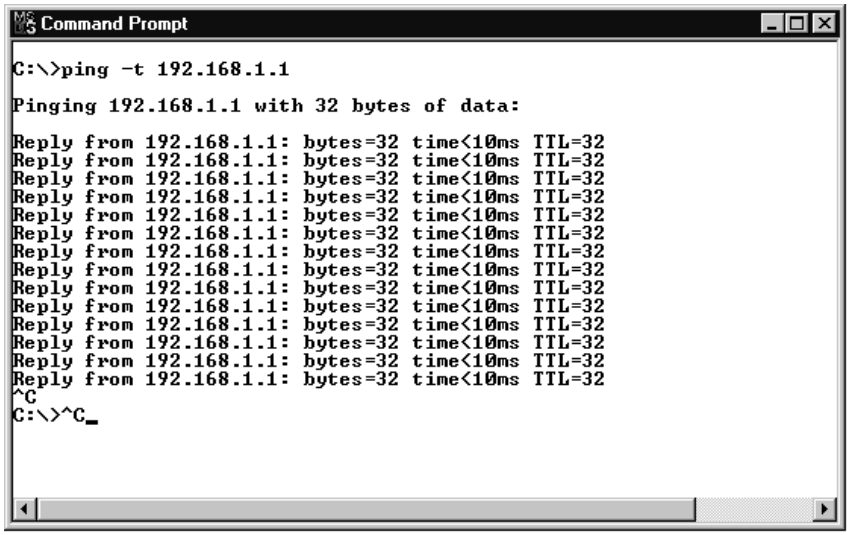

1. Influence of noise from peripheral equipment (device)

1) Turn on the power to the machine with the embedded Ethernet function for which a noise influence check is to be made, and ensure that communication is enabled.

2) Press the emergency stop button of the machine to turn off servo/spindle amplifier activation, then issue a ping command from the personal computer.
3) Count the number of lost packets (to which no response is returned).

   If lost packets occur in this state, there is probably an influence of noise from peripheral equipment.

   Action: Locate the noise source and recheck the cabling to eliminate the influence of noise.

2. Influence of noise from the installed machine

1) Next, release the emergency stop state of the machine to turn on servo/spindle amplifier activation, then issue another ping command from the personal computer.
2) Count the number of lost packets.

   If this number is greater than the number of Item 1 above, the cause is considered to be noise generated by the machine itself. In general, the grounding of the machine or the grounding of the communication destination is defective.

   Action: Check the grounding of the machine and the communication destination, and insulate the machine from the communication backbone.

8.9 ERROR MESSAGES

If an error occurs with the embedded Ethernet function, the log screen of the embedded Ethernet function displays an error message.
This section describes error messages displayed on the log screen.
The major error messages are described below.

If an error occurs, display the log screen and check the error message to identify the cause of the error.
Multiple error messages may be displayed for an error. So, check the display times of error messages.

8.9.1 EMB_ETH MASTER CTRL LOG Screen

`OWN IP ADDRESS IS NOTHING`
The IP address of the local node is not set. Set an IP address correctly.

`OWN IP ADDRESS(???) IS INVALID`
The setting (???) of the IP address of the local node is incorrect. Correct the IP address.

`SUBNET MASK IS NOTHING`
The subnet mask of the local node is not set. Set a correct subnet mask.

`SUBNET MASK(???) IS INVALID`
The setting (???) of the subnet mask of the local node is incorrect. Correct the subnet mask.

`ROUTER IP ADDRESS(???) IS INVALID`
The setting (???) of the IP address of the router is incorrect. Correct the IP address of the router.

`TCP PORT NUMBER(???) IS INVALID`
The setting (???) of the TCP port number is incorrect. Correct the TCP port number.

`UDP PORT NUMBER(???) IS INVALID`
The setting (???) of the UDP port number is incorrect. Correct the UDP port number.

`UDP INTERVAL TIME(???) IS INVALID`
The setting (???) of the time interval for UDP transmission is incorrect. Correct the time interval.

`Embedded LANC SelfTest Error [???]`
An error was detected when the LAN controller of the embedded Ethernet was initialized.
The error code is [???]. Hardware replacement is needed.

8.9.2 EMB_ETH FOCAS1/ETHER LOG Screen

`TCP PORT NUMBER(???) IS INVALID`
The setting (???) of the TCP port number is incorrect. Correct the TCP port number.

`Illegal Broadcast IP ADDRESS`
The broadcast address for UDP transmission is incorrect. Correct the subnet mask and IP address of the local node.

`Illegal Power-on Date or Time`
The current time setting of the CNC is incorrect. Correct the clock of the CNC.

`ALL TASKS(C1) ARE BUSY`
The FOCAS1/Ethernet function or DNC1/Ethernet function is already engaged in communication with five applications. Terminate unnecessary communication applications on the personal computer.
If the cable is disconnected before communication is completed, the embedded Ethernet may need to be reset and initialized.

`Err accept() [???]`
An error occurred when a connection request from the personal computer is being awaited. The error code is [???]. This error message is output, for example, when the embedded Ethernet is reset.

`Err recv() [???]`
An error occurred during data reception. The error code is [???].
This error message is output, for example, when the embedded Ethernet is reset before communication is closed.

8.9.3 EMB_ETH FTP TRANSFER LOG Screen

`Login User is invalid`
The setting of the user name or password is incorrect. Check the user name and password.

`Parameters are invalid`
The port number and IP address of the host computer set on the parameter setting screen are incorrect. Check the settings of the port number and IP address.

`(???) is not found`
The host computer with which an attempt is made to perform FTP communication cannot be found on the network. The IP address of the host computer to be connected with is indicated by (???). Check if the power to the host computer is turned on and if the host computer is connected to the network correctly.

8.9.4 EMB_ETH FACTOLINK LOG Screen

`FACTOLINK#1 IP ADDRESS(???) IS INVALID`
The setting of the IP address (???) of the FACTOLINK server is incorrect. Check the setting of the IP address.

`FACTOLINK#1 PORT NUMBER(???) IS INVALID`
The port number (???) of the FACTOLINK server is incorrect. Check the setting of the program number.

`Err ALREADY CONNECTED`
An additional request is made for connection with a port already connected.
The embedded Ethernet needs to be reset.

8.10 GLOSSARY FOR ETHERNET

This section briefly describes Ethernet–related terms.
The descriptions below provide minimum information only. For further information, refer to relevant publications available on the market.

TCP/IP

For Ethernet–based communication, the TCP/IP (Transmission Control Protocol/Internet Protocol) protocol is generally used. A protocol is a set of rules used to ensure smooth communication between communication devices connected via a transmission line. The TCP/IP protocol is a part of the hierarchical structure consisting of the protocols and services indicated below.

Hierarchy	Protocol/network service
Application layer	User services such as FTP
Transport layer	Protocols such as TCP and UDP
Network layer	Protocols such as IP and ICMP
Data link layer	Protocols such as ARP and RARP
MAC layer	
Physical layer	Hardware such as cables and devices

In general, the TCP/IP protocol is a generic term that represents the protocols installed in the transport layer and network layer.

IP address (INET address)

With TCP/IP, an address referred to as an IP address (INET address) is used to identify a specified communication device among the communication devices connected via Ethernet. So, for communication using TCP/IP, each communication device connected to Ethernet must have a unique IP address assigned.

An IP address is four octets (bytes) long. Usually, an IP address is represented by four 8–bit (octet or byte) fields separated by a period from each other. Each octet can have a value from 0 to 255.

An IP address consists of the address of the network to which the communication device is connected, and the host address of the communication device. Networks are classified into three classes by group size: class A, class B, and class C.

	First octet value	Network address section	Host address section
Class A	0 to 127	xxx.xxx.xxx.xxx	xxx.xxx.xxx.xxx
Class B	128 to 191	xxx.xxx.xxx.xxx	xxx.xxx.xxx.xxx
Class C	192 to 223	xxx.xxx.xxx.xxx	xxx.xxx.xxx.xxx

(A hatched portion indicates the section of each address.)

If a network supports no more than 255 communication devices, class C is generally used.

The IP addresses of all communication devices on one network have the same network address, and only the host address of each communication device is unique on the network.

An IP address with its network address and host address all set to 0 or 255 is unusable.

IP addresses are internationally managed systematically. This means that before an IP address can be used, the IP address must be obtained formally from the international organization.

If the network used by a user is a local network closed within the user's environment (not connected to an outside network), unique IP addresses may be set freely under the control and responsibility of the user. For a local network, the following network addresses can be used without formal registration: 1 address (10) for class A, 16 addresses (172.16 to 172.31) for class B, and 256 addresses (192.168.0 to 192.168.255) for class C. So, it is recommended that IP addresses with these network addresses be used for a local network.

Subnet mask (mask address)

Mask address for indicating the network address section of an IP address.
For a network of class A, specify 255.0.0.0.
For a network of class B, specify 255.255.0.0.
For a network of class C, specify 255.255.255.0.

MAC address (Ethernet address)

A MAC address is assigned to the Ethernet control board of each communication device, and is used to identify each communication device on the MAC layer (lower part of the data link layer). A unique address obtained from an international organization is used so that no address duplication occurs among Ethernet control board suppliers.

Port number

The port number is a 16–bit integer used to associate the transport layer (TCP or UDP) of TCP/IP and a process of the application layer. Port numbers from 0 to about 8000 are called well–known port numbers and assigned to standard applications (such as Telnet and FTP). The assignment of port numbers is described in Assigned Numbers [RFC1340].
When using the FOCAS1/Ethernet function and DNC1/Ethernet function, assign port numbers other than the well–known port numbers.

Broadcast

Transmitting a message to all nodes in the same segment

Client

Device or application that requests a service

Server

Device or application that provides a service

9 DIGITAL SERVO

This chapter describes servo tuning screen required for maintenance of digital servo and adjustment of reference position.

9.1 INITIAL SETTING SERVO PARAMETERS 670
9.2 SERVO TUNING SCREEN 684
9.3 ADJUSTING REFERENCE POSITION (DOG METHOD) 687
9.4 DOGLESS REFERENCE POSITION SETTING . . . 690
9.5 α*i* SERVO WARNING INTERFACE 692
9.6 α*i* SERVO INFORMATION SCREEN 694

9.1 INITIAL SETTING SERVO PARAMETERS

This section describes how to set initial servo parameters, which is used for field adjustment of machine tool.

1. Turn on power at the emergency stop condition.
2. Set the parameter to display the servo tuning screen.

	#7	#6	#5	#4	#3	#2	#1	#0
3111								SVS

#0 (SVS) 0 : Servo tuning screen is not displayed.
1 : Servo tuning screen is displayed.

3. Turn off the power once then turn it on again.
4. Display the servo parameter setting screen by the following operation: [SYSTEM] key [▷] [SV.PARA].
5. Input data required for initial setting using the cursor and page key.

```
SERVO SETTING
                          X-AXIS       Y-AXIS
(1)INITIAL SET BIT     00000000     00000000   ⇦ PRM 2000
(2)MOTOR ID NO.              47           47   ⇦ PRM 2020
(3)amr                 00000000     00000000   ⇦ PRM 2001
(4)cmr                        2            2   ⇦ PRM 1820
(5)FEED GEAR N                1            1   ⇦ PRM 2084
(6)        (N/M)  M         125          125   ⇦ PRM 2085
(7)DIRECTION SET            111          111   ⇦ PRM 2022
(8)VELOCITY PULSE NO.      8192         8192   ⇦ PRM 2023
(9)POSITION PULSE NO.     12500        12500   ⇦ PRM 2024
(10)REF.COUNTER            8000         8000   ⇦ PRM 1821
```

(1) Initial set bit

	#7	#6	#5	#4	#3	#2	#1	#0
2000					PRMCAL		DGPRM	PLC01

#3 (PRMCAL) 1 : Turns to 1 when the initial setting is done.
The following parameters are set automatically in accordance with the no. of pulses of pulse coder:
PRM 2043(PK1V), PRM 2044(PK2V), PRM 2047(POA1),
PRM 2053(PPMAX),PRM 2054(PDDP),
PRM 2056(EMFCMP),
PRM 2057(PVPA), PRM 2059(EMFBAS),
PRM 2074(AALPH),PRM 2076(WKAC)

#1 (DGPRM)☆ 0 : Initial setting of digital servo parameter is done.
1 : Initial setting of digital servo parameter is not done.

#0 (PLC01) 0 : Values of parameter 2023 and 2024 are used as they are:
1 : Values of parameter 2023 and 2024 are multiplied by 10.

(2) Motor ID No.

Select the motor ID No. of the servo motor to be used, according to the motor model and drawing number (the middle four digits of A06B–XXXX–BXXX) listed in the tables on subsequent pages.

NOTE

Servo axes are controlled in groups of two axes. So, for successive servo control numbers (odd number and even number), motor type number unified for servo HRV1 or for servo HRV2 or HRV3 must be specified.

(a) α*i* series servo motor

In the following tables for α*i* series servo motor, The motor type numbers not enclosed in parentheses are for servo HRV1, and the motor type numbers enclosed in parentheses are for servo HRV2 and HRV3.

❑ α*i* series servo motor

Motor model	α1/5000*i*	α2/5000*i*	α4/3000*i*	α8/3000*i*
Motor specification	0202	0205	0223	0227
Motor type No.	152(252)	155(255)	173(273)	177(377)

Motor model	α12/3000*i*	α22/3000*i*	α30/3000*i*	α40/3000*i*
Motor specification	0243	0247	0253	0257
Motor type No.	193(293)	197(297)	203(303)	207(307)

❑ αC*i* series servo motor

Motor model	αC4/3000*i*	αC8/2000*i*	αC12/2000*i*	αC22/2000*i*
Motor specification	0221	0226	0241	0246
Motor type No.	171(271)	176(276)	191(291)	196(296)

Motor model	αC30/1500*i*
Motor specification	0251
Motor type No.	201(301)

❑ αM*i* series servo motor

Motor model	αM2/5000*i*	αM3/5000*i*	αM8/4000*i*	αM12/4000*i*
Motor specification	0212	0215	0235	0238
Motor type No.	162(262)	165(265)	185(285)	188(288)

Motor model	αM22/4000*i*	αM30/4000*i*	αM40/4000*i*
Motor specification	0265	0268	0272
Motor type No.	215(315)	218(318)	222(322)

❑ Linear motor

Motor model	1500A/4	3000B/2	6000B/2	9000B/2
Motor specification	0410	0411	0412	0413
Motor type No.	90	91	92	93

Motor model	15000C/2	3000B/4	6000B/4	9000B/4
Motor specification	0414	0411–B811	0412–B811	0413–B811
Motor type No.	94	120	121	122

Motor model	15000C/3	300D/4	600D/4	900D/4
Motor specification	0414–B811	0421	0422	0423
Motor type No.	123	124	125	126

The motor type numbers are for servo HRV1.

These motor type Nos. may not be supported depending on the servo software being used.
The following lists the motor type Nos. together with the applicable servo software series and editions (A or later).

❑ α*i* series servo motor

Servo software series / Motor model and motor type number		**9060**	**90B0**
α1/5000*i*	152(252)	A	H
α2/5000*i*	155(255)	A	H
α4/4000*i*	173(273)	A	H
α8/3000*i*	177(277)	A	H
α12/3000*i*	193(293)	A	H
α22/3000*i*	197(297)	A	H
α30/3000*i*	203(303)	A	H
α40/3000*i*	207(307)	A	H

❑ α*Ci* series servo motor

Servo software series / Motor model and motor type number		**9060**	**90B0**
α*C*4/3000*i*	171(271)	A	H
α*C*8/2000*i*	176(276)	A	H
α*C*12/2000*i*	191(291)	A	H
α*C*22/2000*i*	196(296)	A	H
α*C*30/1500*i*	201(301)	A	H

❑ αM*i* series servo motor

Servo software series / Motor model and motor type number		9060	90B0
αM2/5000*i*	162(262)	A	H
αM3/5000*i*	165(265)	A	H
αM8/4000*i*	185(285)	A	H
αM12/4000*i*	188(288)	A	H
αM22/4000*i*	215(315)	A	H
αM30/4000*i*	218(318)	A	H
αM40/4000*i*	222(322)	A	H

❑ Linear motor

Servo software series / Motor model and motor type number		9060	90B0
1500A/4	90	A	A
3000B/2	91	A	A
6000B/2	92	A	A
9000B/2	93	A	A
15000C/2	94	A	A
3000B/4	120	A	A
6000B/4	121	A	A
9000B/4	122	A	A
15000C/3	123	A	A
300D/4	124	A	A
600D/4	125	A	A
900D/4	126	A	A

The motor type numbers are for servo HRV1.

(b) For α series servo motor

Model name	α 0.5	α 1/3000	α 2/2000	α 2.5/3000	α 3/3000
Drawing number	0113	0371	0372	0374	0123
Format number	13	61	46	84	15

Model name	α 6/2000	α 6/3000	α 12/2000	α 12/3000	α 22/1500
Drawing number	0127	0128	0142	0143	0146
Format number	16	17	18	19	27

Model name	α 22/2000	α 22/3000	α 30/1200	α 30/2000	α 30/3000
Drawing number	0147	0148	0151	0152	0153
Format number	20	21	28	22	23

Model name	α 40/FAN	α 40/2000	α 65	α 100	α 150
Drawing number	0158	0157	0331	0332	0333
Format number	29	30	39	40	41

For αL series servo motor

Model name	α L3/3000	α L6/2000	α L9/3000	α L25/3000	α L50/2000
Drawing number	0561	0562	0564	0571	0572
Format number	56 or 68	57 or 69	58 or 70	59	60

For αC series servo motor

Model name	α C3/2000	α C6/2000	α C12/2000	α C22/1500
Drawing number	0121	0126	0141	0145
Format number	7	8	9	10

For αHV series servo motor

Model name	α 12HV	α 22HV	α 30HV
Drawing number	0176	0177	0178
Format number	3	4	5

For αE and β series servo motor

Model name	α 0.5	β 1/3000 α E1/3000	β 2/3000 α E2/3000	β 3/3000 α E3/3000	β 6/2000 α E6/2000
Drawing number	0113	0101	0102	0105	0106
Format number	13	35	36	33	34

For αM series servo motor

Model name	α M2/3000	α M2.5/3000	α M3/3000	α M6/3000	α M9/3000
Drawing number	0376	0377	0161	0162	0163
Format number	97	98	24	25	26

Model name	α M22/3000	α M30/3000	α M50/3000
Drawing number	0165	0166	0169
Format number	100	101	108

Model name	α M6HV	α M9HV	α M22HV	α M30HV
Drawing number	0182	0183	0185	0186
Format number	104	105	106	107

For linear motor

Model name	1500A	3000B	6000B	9000B
Drawing number	0410	0411	0412	0413
Format number	90	91	92	93

(3) Arbitrary AMR function

		#7	#6	#5	#4	#3	#2	#1	#0	
PRM	2001	AMR7	AMR6	AMR5	AMR4	AMR4	AMR3	AMR2	AMR1	For each axis

NOTE
Set “00000000”.

(4) CMR

PRM	1820	Command multiply ratio

1) When CMR is 1/2 to 1/27 Set value= $\frac{1}{\text{CMR}}$ +100

2) When CMR is 0.5 to 48 Set value=2×CMR

(5) Turn off the power then back on.

(6) N/M of feed gear (F·FG)

PRM	2084	n for flexible feed gear
PRM	2085	m for flexible feed gear

Setting for the α pulse coder in the semi–closed mode

$$\frac{\text{(Note 1)}\ \text{F·FG numerator } (\leq 32767)}{\text{F·FG denominator } (\leq 32767)} = \frac{\text{Necessary position feedback pulses per motor revolution}}{1{,}000{,}000 \quad \text{(Note 2)}} \quad \text{(as irreducible fraction)}$$

NOTE
1 For both F·FG number and denominator, the maximum setting value (after reduced) is 32767.
2 α*i* pulse coders assume one million pulses per motor revolution, irrespective of resolution, for the flexible feed gear setting.
3 If the calculation of the number of pulses required per motor revolution involves π, such as when a rack and pinion are used, assume π to be approximately 355/113.

[Example]
For detection in 1 μm units, specify as follows:

Ball screw lead (mm/rev)	Number of necessary position pulses (pulses/rev)	F·FG
10	10000	1/100
20	20000	2/100 or 1/50
30	30000	3/100

[Example]
If the machine is set to detection in 1,000 degree units with a gear reduction ratio of 10:1 for the rotation axis, the table rotates by 360/10 degrees each time the motor makes one turn.
1000 position pulses are necessary for the table to rotate through one degree.
The number of position pulses necessary for the motor to make one turn is:

360/10 × 1000 = 36000 with reference counter = 36000

$$\frac{\text{F·FG numerator}}{\text{F·FG denominator}} = \frac{36000}{1{,}000{,}000} = \frac{36}{1000}$$

Setting for use of a separate detector (full–closed)

$$\frac{\text{F·FG numerator } (\leq 32767)}{\text{F·FG denominator } (\leq 32767)} = \frac{\text{Number of position pulses corresponding to a predetermined amount of travel}}{\text{Number of position pulses corresponding to a predetermined amount of travel from a separate detector}} \quad \text{(as irreducible fraction)}$$

[Example]
To detect a distance of 1–μm using a 0.5–μm scale, set the following:

$$\frac{\text{Numerator of F·FG}}{\text{Denominator of F·FG}} = \frac{L/1}{L/0.5} = \frac{1}{2}$$

<<Examples of calculation>>

	1/1000 mm	1/10000 mm
One revolution 8mm of motor 10mm 12mm	n=1/m=125 n=1/m=100 n=3/m=250	n=2/m=25 n=1/m=10 n=3/m=25

(7) Direction of travel

PRM 2022 Rotational direction of motor

111 : Normal (clockwise) –111 : Reverse (counterclockwise)

(8) Number of velocity pulses and position pulses

1) For serial α*i* pulse coder, or serial α pulse coder

	Paramter No.	Increment system : 1/1000mm		Increment system : 1/10000mm	
		Closed loop	Semi–closed loop	Closed loop	Semi–closed loop
High resolution setting	2000	xxxx xxx 0		xxxx xxx 1	
Separate detector	1815	0010 0010	0010 0000	0010 0010	0010 0000
No. of velocity feedback pulses	2023	8192		819	
No. of position feedback pulses	2024	NS	12500	NS/10	1250

NOTE
1 NS is the number of position feedback pulses per one revolution of the motor (multiplied by four)
2 Even if the system employs a closed loop, bit 3 of parameter 2002 is 1 and bit 4 is 0.

(9) Reference counter

PRM 1821 Reference counter capacity for each axis (0 – 99999999)

6. Turn off the power then back on.

(10) FSSB display and setting screen

Connecting the CNC control unit to servo amplifiers via a high–speed serial bus (FANUC Serial Servo Bus, or FSSB), which uses only one fiber optics cable, can significantly reduce the amount of cabling in machine tool electrical sections.

Axis settings are calculated automatically according to the interrelationships between axes and amplifiers entered on the FSSB setting screen. Parameter Nos. 1023, 1905, 1910 to 1919, 1936, and 1937 are specified automatically according to the results of the calculation.

- **Display**

The FSSB setting screen displays FSSB–based amplifier and axis information. This information can also be specified by the operator.

1. Press function key [SYSTEM] .
2. To display [FSSB], press continuous menu key [▷] several times.
3. Pressing soft key [FSSB] causes the AMP SET screen (or the previously selected FSSB setting screen) to appear, with the following soft keys displayed.

The FSSB setting screens include: AMP SET, AXIS SET, and AMP MAINTENANCE.

Pressing soft key **[AMP]** causes the AMP SET screen to appear.
Pressing soft key **[AXIS]** causes the AXIS SET screen to appear.
Pressing soft key **[MAINTE]** causes the AMP MAINTENANCE screen to appear.

1) Amplifier setting screen
The amplifier setting screen consists of two sections: the first section displays information about the slave, while the second section displays information about the pulse modules.

```
AMPLIFIER SETTING                    O1000 N00001
  NO.  AMP     SERIES  UNIT    CUR.   AXIS NAME
    1  A1-L      α    SVM-HV  40AL     1     X
    2  A1-M      α      SVM    12A      2     Y
    3  A2-L      β      SVM    40A      3     Z
    4  A3-L      α      SVM    20A      4     A
    5  A3-M      α      SVM    40A      5     B
    7  A4-L      α      SVU   240A      6     C


  NO.  EXTRA   TYPE   PCB ID
    6    M1      A    0000 DETECTOR(8AXES)
    8    M2      B    12AB
>_
MDI **** *** ***         13:11:56
[  AMP  ][  AXIS  ][ MAINTE ][     ][(OPRT)]
```

The amplifier setting screen consists of the following items:

- NO. (slave number)

  The numbers of up to ten slaves (up to eight amplifiers and up to two pulse modules) connected via the FSSB are displayed sequentially, with the one nearest to the CNC being number 1.

- AMP (amplifier type)

  The amplifier type display consists of the letter A, which stands for “amplifier,” a number that indicates the placing of the amplifier, as counted from that nearest to the CNC, and a letter such as L (first axis) or M (second axis) indicating the placing of the axis in the amplifier.

- AXIS NO. (controlled axis number)

  The axis number of each controlled axis specified in parameters (Nos. 1920 to 1929) is displayed. If a number specified in these parameters falls outside the range of between 1 and the maximum number of controlled axes, 0 is displayed.
- NAME (controlled axis name)

  The axis name assigned to a parameter (No. 1020) corresponding to a particular controlled axis number is displayed. If the controlled axis number is 0, – is displayed.
- The following items are displayed as amplifier information:
  · UNIT (servo amplifier unit type)
  · SERIES (servo amplifier name)
  · CURRENT (maximum rating)
- The following items are displayed as pulse module information:
  · SEPARATE

    This display consists of the letter M, which stands for “pulse module” and a number indicating the placing of the pulse module, as counted from that nearest to the CNC.
  · TYPE

    This display is a letter indicating the type of the pulse module.
  · PCB ID

    This display consists of four digits indicating the pulse module ID (hexadecimal). The pulse module ID is followed by DETECTOR (8–AXES) for the eight–axis separate detector module or DETECTOR (4–AXES) for the four–axis separate detector module.

2) Axis setting screen

The axis setting screen displays the information shown below:

```
AXIS SETTING                              O1000 N00001
  AXIS   NAME AMP      M1  M2   1-DSF  Cs   TNDM
    1      X  A1-L      0   0     0     0     1
    2      Y  A1-M      1   0     1     0     0
    3      Z  A2-L      0   0     0     1     0
    4      A  A3-L      0   0     0     0     2
    5      B  A3-M      0   0     0     0     0
    6      C  A4-L      0   0     0     0     0
>_
MDI **** *** ***         13:11:56
[  AMP  ][  AXIS  ][ MAINTE ][     ][(OPRT)]
```

This axis setting screen displays the following items:

- AXIS (controlled axis number)

  This item is the placing of the NC controlled axis.
- NAME (controlled axis name)
- AMP (type of the amplifier connected to each axis)

- M1 (connector number for pulse module 1)

  This item is the number of the connector for pulse module 1, specified in parameter No. 1931.
- M2 (connector number for pulse module 2)

  This item is the number of the connector for pulse module 2, specified in parameter No. 1932.
- 1–DSF

  This item is the value specified in bit 0 (parameter 1 DSP) of parameter No. 1904. It is 1 for an axis (such as a learning control axis, high–speed current loop axis, or high–speed interface axis) that exclusively uses a DSP, which is usually shared by two–axes.
- Cs: Cs contour controlled axis

  This item is the value specified in parameter No. 1933. It is 1 for the Cs contour controlled axis.
- TNDM (M series only)

  This item is the number specified in parameter No. 1934. Consecutive odd and even numbers are displayed for the master and slave axes for tandem control.

3) Amplifier maintenance screen

   The amplifier maintenance screen displays maintenance information for servo amplifiers. This screen consists of the following two pages, either of which can be selected by pressing the ↑ or ↓ key.

```
AMPLIFIER MAINTENANCE                    O1000 N00001
  AXIS   NAME AMP    SERIES    UNIT   AXES   CUR.
    1      X  A1-L      α     SVM-HV    2    40AL
    2      Y  A1-M      α       SVM     2     12A
    3      Z  A2-L      β       SVM     1     40A
    4      A  A3-L      α       SVM     2     20A
    5      B  A3-M      α       SVM     2     40A
    6      C  A4-L      α       SVU     1    240A




MDI **** *** ***         13:11:56
[  AMP  ][  AXIS  ][ MAINTE ][     ][     ]
```

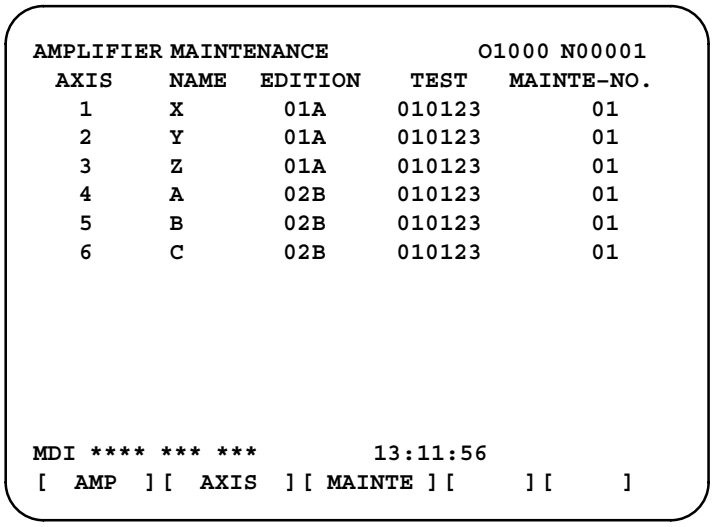

The amplifier maintenance screen displays the following items:

- AXIS (controlled axis number)
- NAME (controlled axis name)
- AMP (type of amplifier connected to each axis)
- SERIES (servo amplifier series of an amplifier connected to each axis)
- UNIT (unit type of a servo amplifier connected to each axis)
- AXES (maximum number of axes controlled by an amplifier connected to each axis)
- CUR. (maximum rating for amplifiers connected to each axis)
- EDITION (unit version number of an amplifier connected to each axis)
- TEST (date of test performed on an amplifier connected to each axis)

  Example) 010123 = January 23, 2001
- MAINTE–NO. (engineering change number for an amplifier connected to each axis)

● Setting

On an FSSB setting screen (other than the amplifier maintenance screen), pressing soft key [(OPRT)] displays the following soft keys:

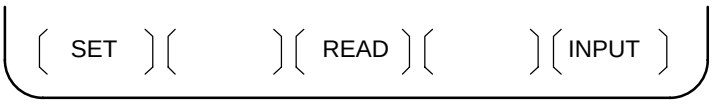

To enter data, place the machine in MDI mode or the emergency stop state, position the cursor to the point where a desired item is to be input, then enter the desired data and press soft key **[INPUT]** (or the INPUT key on the MDI panel).
When soft key **[SET]** is pressed after data has been entered, a warning message is displayed if the entered data contains an error. When the data is satisfactory, the corresponding parameter is set up.
To restore the previous value of a parameter if, for example, an entered value is incorrect, press soft key **[READ]**.
When the power is turned on, values are read from the parameters and displayed on the screen.

CAUTION
1 For the parameters to be specified on the FSSB setting screen, do not attempt to enter values on the parameter screen using the MDI or a G10 command. Use only the FSSB screen to enter values for these parameters.
2 If pressing soft key **[SET]** results in a warning message being displayed, retry data entry, or press soft key **[READ]** to clear the warning message. Note that pressing the reset key does not clear the warning message.

1) Amplifier setting screen

```
AMPLIFIER SETTING                    O1000 N00001
  NO.  AMP     SERIES  UNIT    CUR.   AXIS NAME
    1  A1-L      α    SVM-HV  40AL    1     X
    2  A1-M      α      SVM    12A     2     Y
    3  A2-L      β      SVM    40A     3     Z
    4  A3-L      α      SVM    20A     4     A
    5  A3-M      α      SVM    40A     5     B
    7  A4-L      α      SVU   240A     6     C


  NO.  EXTRA   TYPE   PCB ID
    6    M1      A    0000 DETECTOR(8AXES)
    8    M2      B    12AB
>_
MDI **** *** ***         13:11:56
 [SETTING] [       ] [ READ ] [       ] [ INPUT ]
```

The amplifier setting screen displays the following items:

- NO. (controlled axis number)

  For this item, enter a value of between 1 and the maximum number of controlled axes. If a number that falls outside this range is entered, the warning message **"INVALID FORMAT"** appears. If the entered controlled axis number is duplicate or 0, the warning message **"SPECIFIED DATA IS OUT OF RANGE"** appears when soft key **[SET]** is pressed to assert the entered value. In this case, no value can be entered for the parameter.

NOTE
When the servo of another system is controlled, FSSB cannot be set automatically.
Be careful when controlling two or three systems.
To control the servo of another system, make manual settings as described in Appendix G.

2) Axis setting screen

```
AXIS SETTING                              O1000 N00001
  AXIS   NAME AMP      M1  M2   1-DSF  Cs   TNDM
    1      X  A1-L     0   0      0     0     1
    2      Y  A1-M     1   0      1     0     0
    3      Z  A2-L     0   0      0     1     0
    4      A  A3-L     0   0      0     0     2
    5      B  A3-M     0   0      0     0     0
    6      C  A4-L     0   0      0     0     0

>_
MDI **** *** ***         13:11:56
[SETTING][       ][ READ ][       ][ INPUT ]
```

On the axis setting screen, the following items can be specified:

- M1 (connector number for pulse module 1)

  For an axis that uses pulse module 1, enter a connector number using a number in the range of between 1 and the maximum number of axes for pulse module 1. When pulse module 1 need not be used, enter 0. If a number that falls outside the valid range is entered, the warning message **“INVALID FORMAT”** is displayed.

- M2 (connector number for pulse module 2)

  For an axis that uses pulse module 2, enter a connector number using a number in the range of between 1 and the maximum number of axes for pulse module 2. When pulse module 2 need not be used, enter 0. If a number that falls outside the valid range is entered, the warning message **“INVALID FORMAT”** is displayed.

- 1–DSF

  Enter 1 for the following axes, each of which exclusively uses a DSP, which is usually shared by two–axes. If a number other than 0 or 1 is entered, the warning message **“INVALID FORMAT”** is displayed.

  · Learning control axis

  · High–speed current loop axis

  · High–speed interface axis

- Cs (Cs contour controlled axis)

  Enter 1 for the Cs contour controlled axis. If a number other than 0 or 1 is entered, the warning message **“INVALID FORMAT”** is displayed.

- TNDM

  Enter odd and even numbers for the master and slave axes for tandem control. These numbers must be consecutive and in the range of between 1 and 8. If a number that falls outside the valid range is entered, the warning message **“INVALID FORMAT”** is displayed.

When soft key **[SET]** is pressed on the axis setting screen after data entry, the warning message **“SPECIFIED DATA IS OUT OF RANGE”** is displayed if any of the following conditions is satisfied.

- Both M1 and M2 are nonzero for an axis.
- Any two of TWO–AXES, Cs, and TANDEM are nonzero for an axis.
- A duplicate value is specified for M1.
- A duplicate value is specified for M2.
- A duplicate value is specified for Cs.
- A duplicate value is specified for TANDEM.
- An invalid master/slave axis pair is specified for TANDEM.

9.2 SERVO TUNING SCREEN

9.2.1 Parameter Setting

Set a parameter to display the servo tuning screen.

	#7	#6	#5	#4	#3	#2	#1	#0
3111								SVS

#0 (SVS) 0 : Servo tuning screen is not displayed.
1 : Servo tuning screen is displayed.

9.2.2 Displaying Servo Tuning Screen

1. Press [SYSTEM] key [▷] and soft key **[SV. PARA]** in this order.
2. Press soft key **[SV.TUN]** to select the servo tuning screen.

```
SERVO TUNING                              01234 N12345
(PAMAMETER)                               (MONITOR)
(1) FUN.BIT          00000000    ALARM 1       00000000  (9)
(2) LOOP GAIN            3000    ALARM 2       00000000  (10)
(3) TURNING SET.            0    ALARM 3       10000000  (11)
(4) SET PERIOD              0    ALARM 4       00000000  (12)
(5) INT.GAIN              113    ALARM 5       00000000  (13)
(6) PROP.GAIN           -1015    LOOP GAIN         2999  (14)
(7) FILER                   0    POS ERROR          556  (15)
(8) VELOC.GAIN            125    CURRENT%            10  (16)
                                 SPEED RPM          100  (17)

[ SV SET ][ SV TUN ][      ][      ][ OPE ]
```

(1) Function bit : PRM 2003
(2) Loop gain : PRM 1825
(3) Tuning start :
(4) Set period :
(5) Integral gain : PRM 2043
(6) Proportional gain : PRM 2044
(7) Filter : PRM 2067
(8) Velocity gain $\text{Set value} = \frac{(\text{PRM } 2021)+256}{256} \times 100$
(9) Alarm 1 : DGN 200 (Details of alarm 400 and 414)
(10) Alarm 2 : DGN 201 (Details of disconnection alarm, overload)
(11) Alarm 3 : DGN 202 (Details of alarm 319)
(12) Alarm 4 : DGN 203 (Details of alarm 319)
(13) Alarm 5 : DGN 204 (Details of alarm 414)
(14) Loop gain : Actual loop gain
(15) Position error : Actual position error(DGN 300)
(16) Current(%) : Indicate current with % to the rated value.
(17) Current(A) : Indicate current with A.
(18) Speed RPM : Number of motor actual rotation

	#7	#6	#5	#4	#3	#2	#1	#0
Alarm1	OVL	LV	OVC	HCA	HVA	DCA	FBA	OFA

DGN (200) :

#7 (OVL) : Overload alarm

#6 (LV) : Insufficient voltage alarm

#5 (OVC) : Overcurrent alarm

#4 (HCA) : Abnormal current alarm

#3 (HVA) : Excessive voltage alarm

#2 (DCA) : Discharge alarm

#1 (FBA) : Disconnection alarm

#0 (OFA) : Overflow alarm

	#7	#6	#5	#4	#3	#2	#1	#0
Alarm2	ALD			EXP				

DGN (201) ⇓

Over-load alarm	0	—	—	—	Amplifier overheat
	1	—	—	—	Motor overheat
Discon-nection alarm	1	—	—	1	Separate type pulse coder disconnec-tion (Hardware)
	0	—	—	0	Pulse coder disconnection (software)

	#7	#6	#5	#4	#3	#2	#1	#0
Alarm3		CSA	BLA	PHA	RCA	BZA	CKA	SPH

DGN (202) :

#6 (CSA) : Hardware of serial pulse coder is abnormal.

#5 (BLA) : Battery voltage is in low (warning).

#4 (PHA) : Serial pulse coder or feedback cable is abnormal.
Counting the feedback signal is in error.

#3 (RCA) : Serial pulse coder is faulty.
Counting is in error.
If the RCA bit is set to 1 when both the FBA bit (bit 1 of alarm 1) and ALD bit of alarm 2 are set to 1 and the EXP bit of alarm 2 (internal hardware disconnection) is set to 1, a count miss alarm (CMAL) occurs in the α pulse coder.

#2 (BZA) : Battery voltage becomes 0.
Replace batteries and set the reference position.

#1 (CKA) : Serial pulse coder is faulty.
Internal clock has stopped.

#0 (SPH) : Serial pulse coder or feedback cable is faulty.
Counting the feedback signal is in error.

	#7	#6	#5	#4	#3	#2	#1	#0
Alarm4	DTE	CRC	STB	PRM				

DGN (203) :

#7 (DTE) : Communication error of serial pulse coder.
There is no response.
Generally, a leading cause is a break in a wire.

#6 (CRC) : Communication error of serial pulse coder.
Transmitted data is in error.

#5 (STB) : Communication error of serial pulse coder.
Transmitted data is in error.

#4 (PRM) : The alarm is detected by the digital servo, the values specified in the parameter is not correct.

	#7	#6	#5	#4	#3	#2	#1	#0
Alarm5		OFS	MCC	LDM	PMS			

DGN (204) :

#6 (OFS) : A/D conversion of current value of digital servo is abnormal.

#5 (MCC) : Contacts of electro–magnetic contactor of servo amplifier is blown

#4 (LDM) : LED of α pulse coder is abnormal.

#3 (PMS) : No. of feedback pulses are in error because α pulse coder or feedback cable is faulty.

9.3 ADJUSTING REFERENCE POSITION (DOG METHOD)

9.3.1 General

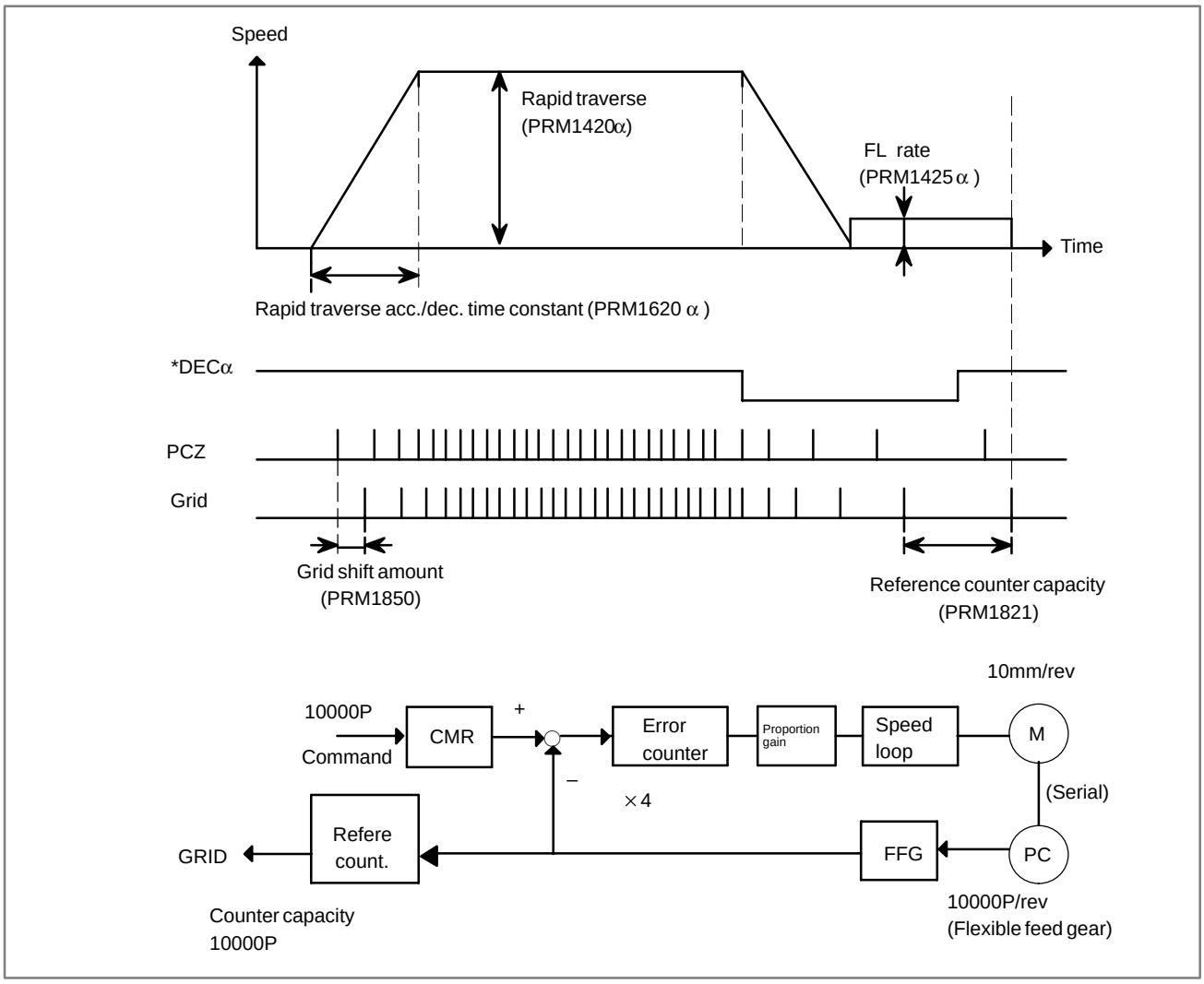

- **Parameter**

		#7	#6	#5	#4	#3	#2	#1	#0
PRM	1002							DLZ	

#1(DLZ) 0 : Reference position return method is normal (dog).

1 : Dogless reference position setting is used.

		#7	#6	#5	#4	#3	#2	#1	#0
PRM	1005							DLZ	

#1(DLZ) 0 : The normal method (dog) is used for reference position return.

1 : Reference position setting without dogs is used (axis by axis).

NOTE
A reference position can be set axis by axis by setting bit 1 of parameter No. 1002 to 0 and setting bit 1 of parameter No. 1005. Reference position setting without dogs cannot be used for a spindle positioning axis and Cs contour axis. When these axes are involved, use bit 1 of parameter No. 1005.

PRM	1821	Reference counter capacity [P]

No. of feedback pulses or its division by an integer is set.

PRM	1850	Grid shift amount per axis [P]

When the resolution is 0.0001mm, set the value in the unit ten times the detection unit.

		#7	#6	#5	#4	#3	#2	#1	#0
PRM	1815			APC	APZ			OPT	

#5(APC) 0 : Position detector is other than absolute pulse coder.

1 : Position detector is absolute pulse coder.

#4(APZ) Zero position of absolute pulse coder is :

0 : Not established

1 : Established
(Turns to 1 after establishment)
To manually change the value of the APZ bit from 0 to 1 without first returning to the reference position
when using serial pulse coder α , follow this procedure: Back up the data with the battery and give the motor one or more turns.
Turn the power off then on again, then change the APZ bit setting from 0 to 1.

#1(OPT) 0 : Position detection is performed by the pulse coder built in the motor.

1 : Separate type pulse coder or linear scale is used.

- **Separate Type Pulse Coder or Linear Scale is Used**

PRM | 1821 | Reference counter capacity per axis [P]

Normally, the number of feedback pulses per motor revolution is set to the reference counter capacity.

When plural reference marks are on a linear scale, a quotient of the distance between the reference marks divided by an interfer may be used as a reference counter capacity:

Example)

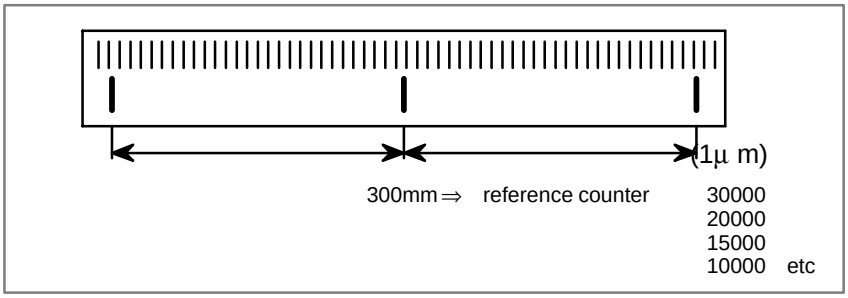

9.4 DOGLESS REFERENCE POSITION SETTING

When there are no dog nor limit switch for reference position return, this function enables the tool to return the reference position that is set by MTB.
When the absolute position detector is used, the reference position once set remains also during power off. When the absolute detector is replaced or absolute position is lost, perform this setting.

9.4.1 General

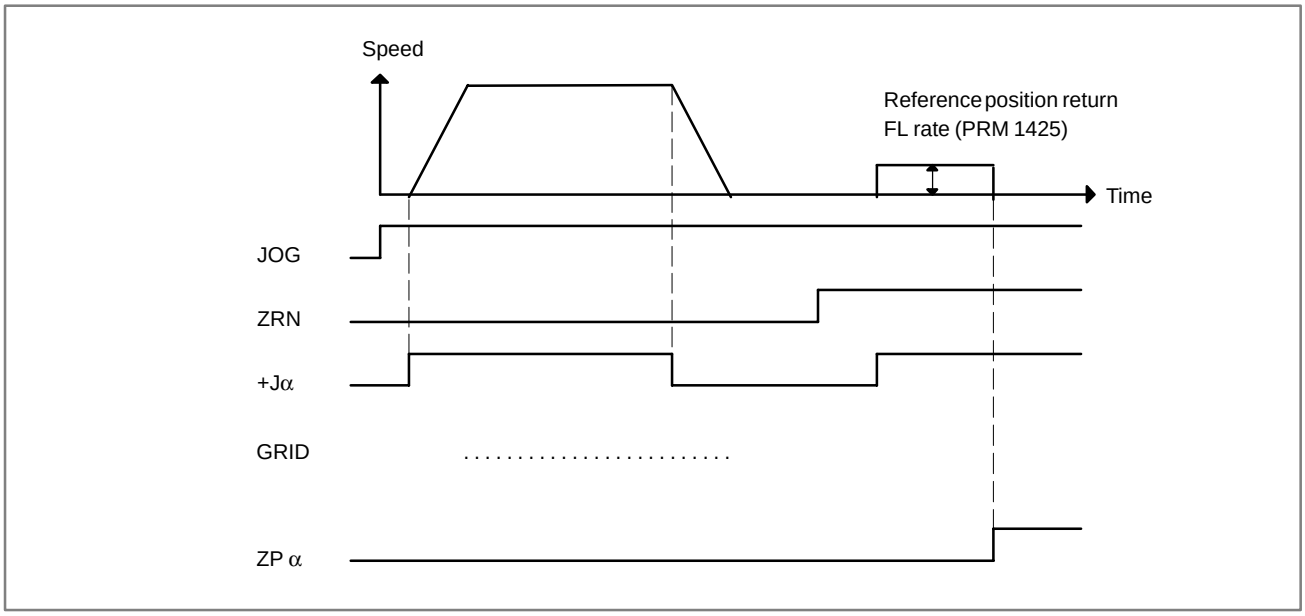

9.4.2 Operation

1 Move the tool near the reference position using a manual operation.
2 Select the reference position return mode or switch.
3 Press a button for an axis–and–direction–select–signal + or –, and the machine moves to the next grid, then stops.
(This position is set as the reference position).
After the reference position has been set, select the reference position return mode(ZRN signal is 1) and turn on an axis–and–direction–select signal, then the tool returns to the reference position.

9.4.3 Associated Parameters

		#7	#6	#5	#4	#3	#2	#1	#0
PRM	1002							DLZ	

#1(DLZ) 0 : Dog is used for reference position return

1 : Dogless reference position setting (all axes)

		#7	#6	#5	#4	#3	#2	#1	#0
PRM	1005							DLZ	

#1(DLZ) 0 : The normal method (dog) is used for reference position return.

1 : Reference position setting without dogs is used (axis by axis).

NOTE
A reference position can be set axis by axis by setting bit 1 of parameter No. 1002 to 0 and setting bit 1 of parameter No. 1005. Reference position setting without dogs cannot be used for a spindle positioning axis and Cs contour axis. When these axes are involved, use bit 1 of parameter No. 1005.

		#7	#6	#5	#4	#3	#2	#1	#0
PRM	1006			ZMI					

#5(ZMI) 0 : Reference position return and backlash initial direction is +.

1 : Reference position return and backlash initial direction is –.

After ZRN signal becomes 1, manual feed direction is always the direction set by this parameter irrespective of an axis selection signal.

9.5 αi SERVO WARNING INTERFACE

General

The αi servo system can report the warning status before one of the following target alarms occurs.
When the warning status is entered, a report to the PMC is issued.
For example, this signal can be used by the machine for retracting tools from the time a warning occurs by the time a servo alarm occurs.

Signal

Servo warning detail signals SVWRN1 to 4 <F093#4 to #7>

[Classification] Output signal

[Function] Reports the warning signal corresponding to the state of the servo amplifier.

[Output condition] The following table shows the warning statuses of the servo amplifier and their corresponding warning signals.

Corresponding alarm messages	Warning status signals (F93)				Time from when a warning state signal is issued to until an alarm occurs
	SVWRN4 (#7)	SVWRN3 (#6)	SVWRN2 (#5)	SVWRN1 (#4)	
444 n AXIS: INV. COOLING FAN FAILURE	1	0	0	0	One minute
601 n AXIS: INV. RADIATOR FAN FAILURE	1	0	0	1	Until overheat occurs (inconstant)
443 n AXIS: CNV. COOLING FAN FAILURE	1	1	0	0	One minute
606 n AXIS: CNV. RADIATOR FAN FAILURE	1	1	0	1	Until overheat occurs (inconstant)
431 n AXIS: CNV. OVERLOAD	1	1	1	0	One minute
607 n AXIS: CNV. SINGLE PHASE FAILURE	1	1	1	1	PSMR: Five seconds, PSM: One minute

A timing chart for handling a warning is shown below.

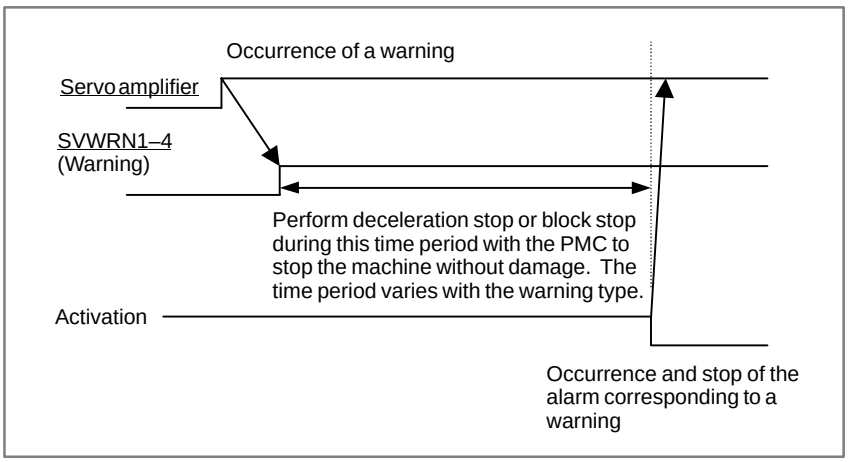

Signal address

	#7	#6	#5	#4	#3	#2	#1	#0
F903	SVWRN4	SVWRN3	SVWRN2	SVWRN1				

9.6 αi SERVO INFORMATION SCREEN

General

In the αi servo system, ID information output from each of the connected units is obtained and output to the CNC screen.

The units that have ID information are shown below.
(Remark: Some instances of these units do not have ID information.)

- Servo motor
- Pulse coder
- Servo amplifier module
- Power supply module

ID information is automatically read from each of the connected units during first startup of the CNC and then recorded. During the second or later startup, the ID information recorded during first startup can be compared with the ID information read this time on the screen to check whether the configuration of the connected units is changed. (If there is a difference between them, the alarm mark (*) appears.)

The recorded ID information can be edited. Therefore, the ID information of an unit that does not have ID information can be displayed. (However, the alarm mark (*) indicating a difference between these IDs appears.)

Parameter

	#7	#6	#5	#4	#3	#2	#1	#0
13112							SVI	IDW

[Data type] Bit

IDW The edit of the servo information screen or the spindle information screen is:

0 : Prohibited
1 : Allowed

SVI The servo information screen is:

0 : Displayed
1 : Not displayed

Displaying the servo ID screen

1 Press the SYSTEM function key, then press the **[System]** soft key.

2 Press the **[SV Information]** soft key to display the screen as shown below.

```
SERVO INFORMATION                O0000 N00000

  X AXIS
 SERVO MOTOR SPEC  A06B-0268-B100
 SERVO MOTOR S/N   C00ZB1111
 PULSECODER SPEC.  A860-2000-T301
 PULSECODER S/N    00000001
 SERVO AMP SPEC.   A06B-6114-H211
 SERVO AMP S/N     V01311111
 PSM SPEC.         A06B-6087-H126#000001
 PSM S/N           V01311111



 MDI ****  ***  ***      19:12:26
[SYSTEM][SV-INF][SP-INF][       ][       ]
```

NOTE
Servo information is stored in flash ROM. If there is a difference between the servo information in flash ROM and the actual servo information, the corresponding items are preceded by *, as shown below.

```
SERVO INFORMATION                O0000 N00000

  X AXIS
 SERVO MOTOR SPEC  A06B-0268-B100
 SERVO MOTOR S/N   C00ZB1111
 PULSECODER SPEC.  A860-2000-T301
 PULSECODER S/N    00000001
*SERVO AMP SPEC.   A06B-6114-H211
*SERVO AMP S/N     V01311111
 PSM SPEC.         A06B-6087-H126#000001
 PSM S/N           V01311111


)_
 MDI ****  ***  ***      19:12:26
[SYSTEM][SV-INF][SP-INF][       ][(OPRT)]
```

Additional Information

Even if replacement is performed reasonably such as for repairing, this function incorrectly indicates the * mark when it detects the replacement.

To clear the * mark, follow the steps below to update the registered data, as described in the editing section later.

(1) Make the registered data editable. (Parameter IDW (No. 13112#0) = 1)
(2) On the edit screen, place the cursor on the item from which you want to delete the * mark.
(3) Operate the soft keys [CHANGE], [INPUT], and [SAVE] in that order.

Editing the servo ID screen

1 Assume that parameter No.13112#0(IDW) = 1.

2 Press the MDI switch on the machine operator's panel.

3 Follow the steps shown in "Displaying the servo ID screen" to display the screen as shown below.

```
SERVO INFORMATION                O0000 N00000

  X AXIS
 SERVO MOTOR SPEC  A06B-0268-B100
 SERVO MOTOR S/N   C00ZB1111
 PULSECODER SPEC.  A860-2000-T301
 PULSECODER S/N    00000001
 SERVO AMP SPEC.   A06B-6114-H211
 SERVO AMP S/N     V01311111
 PSM SPEC.         A06B-6087-H126#000001
 PSM S/N           V01311111


)_
 MDI  ****  ***  ***      19:12:26
(SYSTEM)(SV-INF)(SP-INF)(        )( (OPRT) )
```

4 To move the cursor on the screen, use the ↑ and ↓ keys.

Screen operation

Mode	Key operation	Use
Viewing (*1)	Page key	Scrolls up or down on a screen–by–screen basis.
Editing (*2)	Soft key [INPUT]	Replace the selected ID information at the cursor position with the character string in key–in buffer.
	[CANCEL]	Deletes the character string in key–in buffer.
	[CHANGE]	Transfers the selected ID information at the cursor position that was sent by the servo, to key–in buffer. Only the items preceded by * (*3) are valid.
	[SAVE]	Saves the ID information that has been changed on the servo information screen in flash ROM.
	[RELOAD]	Cancels the ID information that has been changed on the servo information screen and loads ID information from flash ROM.
	Page key	Scrolls up or down on a screen–by–screen basis.
	Cursor key	Scrolls up or down the selection of ID information.

*1 Viewing mode: when parameter No.13112#0 = 0

*2 Editing mode: when parameter No.13112#0 = 1

*3 Servo information is stored in flash ROM. If there is a difference between the servo information in flash ROM and the actual servo information, the corresponding items are preceded by *.

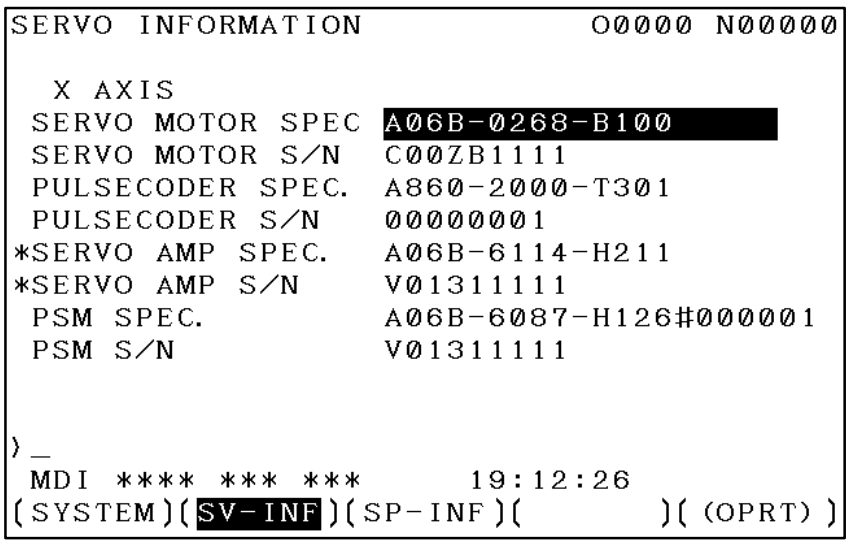

Note

For axes that are not used by the α*i* servo system, ID information of connected units cannot be obtained.

10 AC SPINDLE (SERIAL INTERFACE)

This chapter outlines the serial interface and analog interface spindle amplifiers and explains related parameters.

10.1 AC SPINDLE (SERIAL INTERFACE) 699
10.1.1 Outline of Spindle Control 699
10.1.2 Spindle Setting and Tuning Screen 702
10.1.3 Automatic Setting of Standard Parameters 710
10.1.4 Warning Interface for the α*i* Spindle 711
10.1.5 α*i* Spindle Information Screen 713
10.2 AC SPINDLE (ANALOG INTERFACE) 717
10.2.1 Outline of Spindle Control 717

The following drawing number is indicated on the upper part of the spindle unit of the serial interface spindle amplifier:

10.1 AC SPINDLE (SERIAL INTERFACE)

10.1.1 Outline of Spindle Control

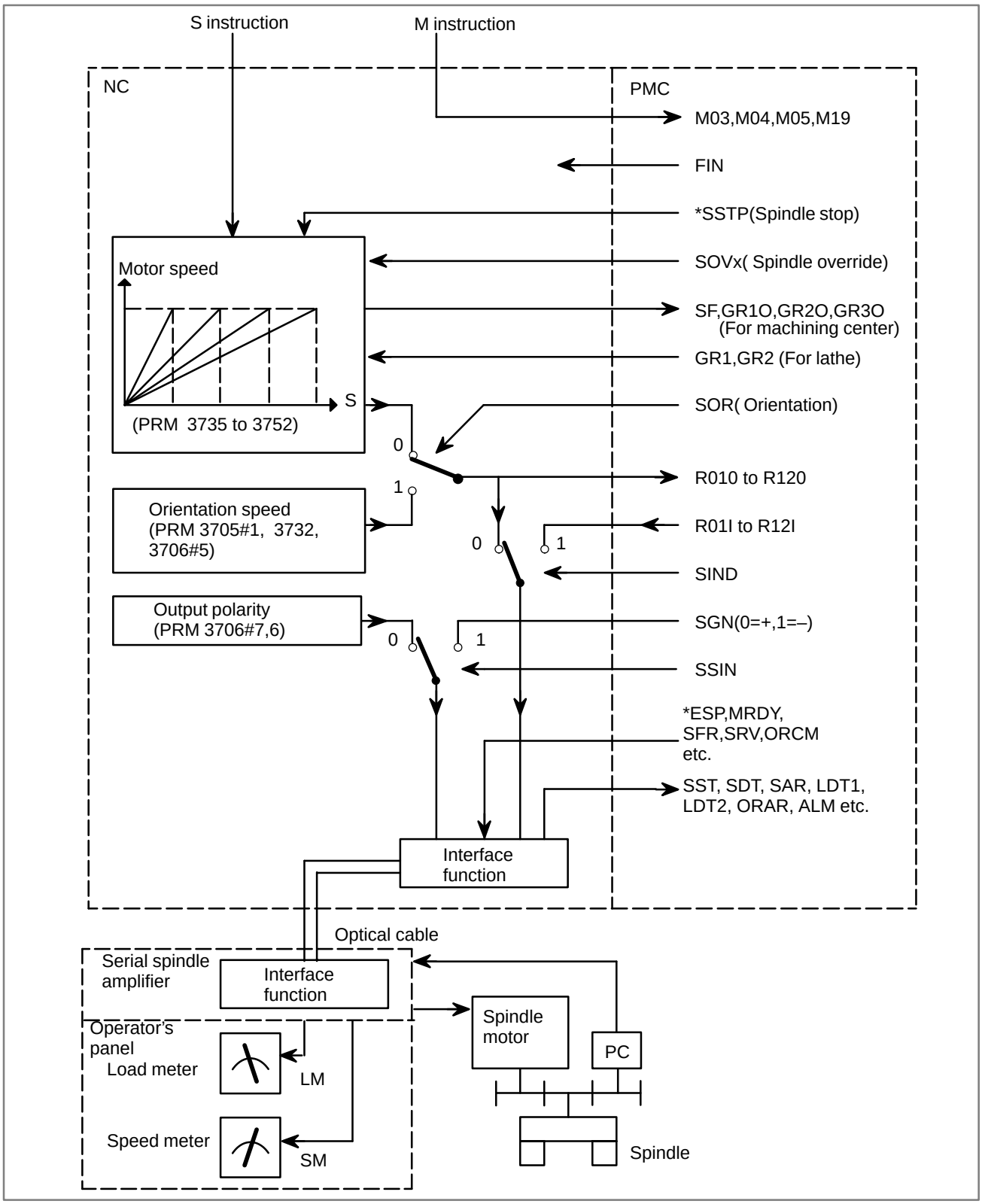
S instruction
M instruction
NC
PMC
M03,M04,M05,M19
FIN
*SSTP(Spindle stop)
SOVx(Spindle override)
SF,GR1O,GR2O,GR3O
(For machining center)
GR1,GR2 (For lathe)
SOR(Orientation)
Motor speed
S
(PRM 3735 to 3752)
0
1
R010 to R120
R01I to R12I
SIND
SGN(0=+,1=–)
SSIN
*ESP,MRDY,
SFR,SRV,ORCM
etc.
SST, SDT, SAR, LDT1,
LDT2, ORAR, ALM etc.
Orientation speed
(PRM 3705#1, 3732,
3706#5)
Output polarity
(PRM 3706#7,6)
Interface
function
Optical cable
Serial spindle
amplifier
Interface
function
Operator's
panel
Load meter
LM
Speed meter
SM
Spindle
motor
PC
Spindle

10.1.1.1
Method A of gear change for machining center

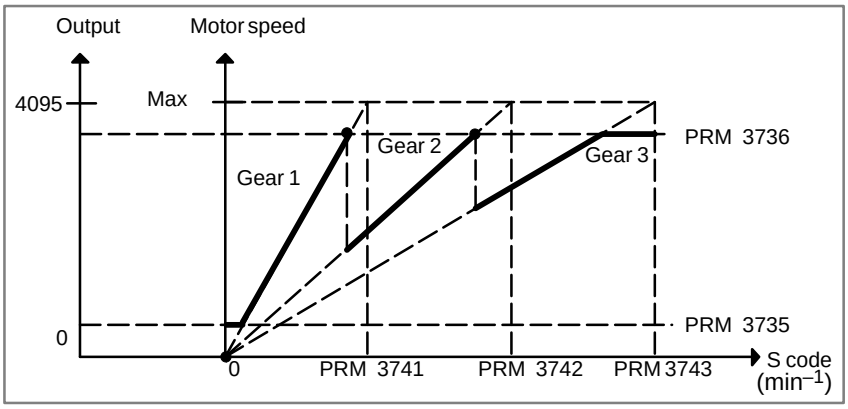

10.1.1.2
Method B of gear change for machining center (PRM 3705#2=1)

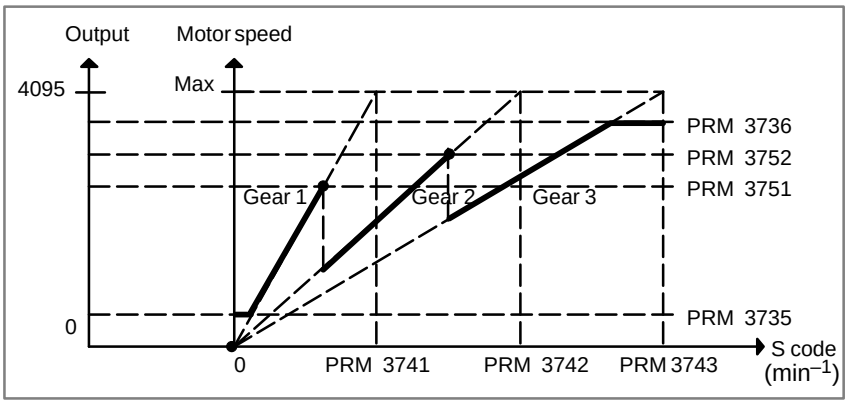

10.1.1.3
For lathe

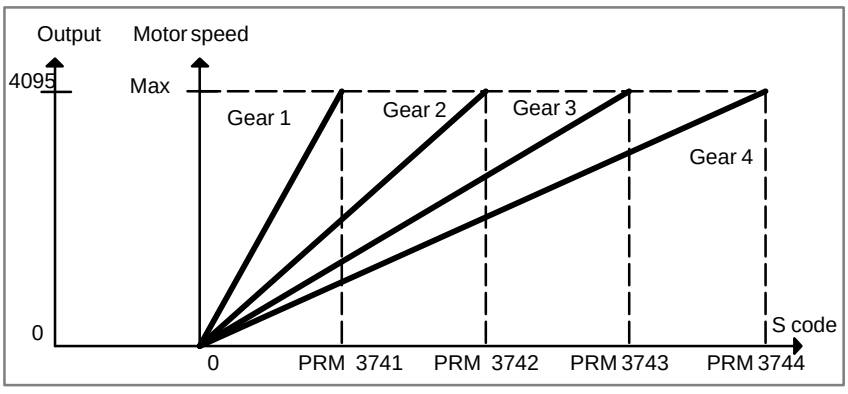

10.1.2 Spindle Setting and Tuning Screen

10.1.2.1 Display method

(1) Confirm the parameters

	#7	#6	#5	#4	#3	#2	#1	#0
3111							SPS	

Bit1 (SPS) 0 : The spindle tuning screen is not displayed.

☆ 1 : The spindle tuning screen is displayed.

(2) Press the SYSTEM key to select the screen for setting parameters and other data.

(3) Press the continuous menu key ▷ .

(4) Press the soft key **[SP.PRM]**. Then, the spindle setting and tuning screen appears.

(5) The following screens are provided. These screens can be selected using soft keys.

1) **[SP.SET]** : Spindle setting screen
2) **[SP.TUN]** : Spindle tuning screen
3) **[SP.MON]** : Spindle monitor screen

(6) With the page keys PAGE ↑ PAGE ↓, a spindle to be displayed can be selected (only when multiple serial spindles are connected).

10.1.2.2 Spindle setting screen

```
SPINDLE SETTING
(1)GEAR SELECT      : 1
(2)SPINDLE          : S11

  (PARAMETER)
(3)GEAR RATIO            50
(4)MAX SPINDLE SPEED   3000
(5)MAX MOTOR SPEED     6000
(6)MAX C AXIS SPEED     100
```

- **Gear selection**

The gear select status on the machine side is displayed.

Indication	CTH1	CTH2
1	0	0
2	0	1
3	1	0
4	1	1

- **Spindle**

Select a spindle for which data is to be set.
S11: Main spindle amplifier for the 1st spindle
S12: Subspindle amplifier for the 1st spindle
S21: Main spindle amplifier for the 2nd spindle
S22: Subspindle amplifier for the 2nd spindle

- **Parameters**

	S11:1st Main	S12:1st Sub	S21:2nd Main	S22:2nd Sub
Gear ratio(HIGH)	4056	4216	4056	4216
Gear ratio(MIDIUM HIGH)	4057		4057	
Gear ratio(MIDIUM LOW)	4058	4217	4058	4217
Gear ratio(LOW)	4059		4059	
Max. spindle speed (gear1)	3741		3741	
Max. spindle speed (gear2)	3742		3742	
Max. spindle speed (gear3)	3743		3743	
Max. spindle speed (gear4)	3744		3744	
Max. motor speed	4020	4196	4020	4196
Max. C axis speed	4021	None	4021	None

10.1.2.3 Spindle tuning screen

```
SPINDLE TUNING

OPERATION    : SPEED CONTROL
GEAR SELECT  : 1
SPINDLE      : S11
(PARAMETER)              (MONITOR)
PROP.GAIN     20         MOTOR SPEED   100
INT.GAIN      50         SPINDLE SPEED 150
LOOP GAIN   3000         POS ERR S1    100
MOTOR VOLT    30         POS ERR S2    103
TIME CONST   100         SYN.ERR         3
REF. SHIFT  2046
```

- **Operation mode**

1 : Normal operation
2 : Orientation
3 : Synchronization control
4 : Rigid tapping
5 : Cs contour control
6 : Spindle positioning control

- **Displayed parameters** The displayed parameters vary depending on the operation mode.

Spindle positioning control	Normal operation	Orientation	Synchronization control	Rigid tapping	Cs contour control
Proportional gain Integral gain Loop gain Motor voltage ZRN gain (%) Shift reference position	Proportional gain Integral gain Motor voltage Regenerative power	Proportional gain Integral gain Loop gain Motor voltage ORAR gain (%) Shift spindle stop position Shift reference position	Proportional gain Integral gain Loop gain Motor voltage Acceleration/deceleration constant (%) Shift reference position	Proportional gain Integral gain Loop gain Motor voltage ZRN gain Shift reference position	Proportional gain Integral gain Loop gain Motor voltage ZRN gain (%) Shift reference position

Note) For the parameter numbers corresponding to the displayed parameter items, see Section 10.1.2.5.

- **Displayed monitoring items** The displayed monitoring items vary depending on the operation mode.

Spindle positioning control	Normal operation	Orientation	Synchronization control	Rigid tapping	Cs contour control
Motor speed Feedrate Position deviation S1	Motor speed Spindle speed	Motor speed Spindle speed Position deviation S1	Motor speed Spindle speed Position deviation S1 Position deviation S2 Synchronous deviation	Motor speed Spindle speed Position deviation S1 Position deviation Z Synchronous deviation	Motor speed Spindle speed Position deviation S1

Note 1)

$$\text{Motor speed } [\text{min}^{-1}] = \frac{|\text{Spindle data}|}{16383} \times \text{Max. Motor speed.}(*1)$$

(*1) Parameter 4020: Main spindleParameter 4196: Subspindle

Note 2) The spindle speed in Cs contour control mode is in degrees/min.

10.1.2.4 Spindle monitor screen

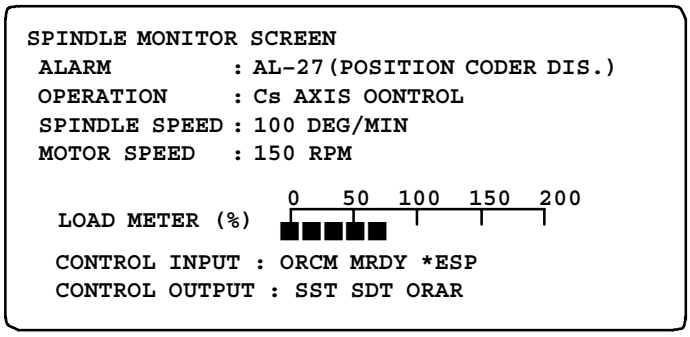

- **Spindle alarm**

1: Motor overheated
2: Speed deviation excessive
3: Fuse blow of DC link
4: Fuse blow of AC inputline
5: Fuse blow of DC voltage
7: Excessive speed
9: Heat sink overheat
10: Low voltage of AC input
11: Excess voltage in DC link
12: Excess current in DC link
13: CPU internal data memory error
18: ROM SUM check error
19: U phase current offset excessive
20: V phase current offset excessive
24: Serial data transmission abnormal
25: Serial data transmission stop
26: Cs axis speed detecting signal failure
27: Position coder signal disconnection
28: Cs pos.detect signal disconnection
29: Short time overload
30: Input circuit excess current
31: Speed detecting signal disconnection
32: SLC LSI internal RAM abnormal
33: DC link charging insufficient
34: Parameter abnormal setting
35: Gear ratio data excessive
36: Error counter overflow
37: Speed detecting unit error setting
38: Magnetic sensor signal abnormal
39: Alarm of one revolution signal for Cs axis control is detected
40: Alarm of one revolution signal for Cs axis control is not detected
41: Erroneous detection of the position coder one revolution signal
42: Undetection of the position coder one revolution signal
46: Erroneous detection of the position coder one revolution signal on threading
47: Abnormal position coder signal
48: Erroneous detection of position coder one revolution signal

- **Operation**

Following 6 modes are available:

a. Normal operation
b. Orientation
c. Synchronous operation
d. Rigid tapping
e. Cs contour cotrol
f. Spindle positioning control

- **Load meter**

The load meter displays spindle load in a unit of 10%.

$$1)\ \text{Load meter}[\%] = \frac{\text{Load meter data}}{32767} \times \text{Max.output value of load meter (*)}$$

(*) PRM 4127: Main
PRM 4274: Sub.

- **Control input signal**

Max.10 signals those are ON are displayed from the following signals:

TLML	: Torque limit command (low)	SPSL	: Spindle selection signal
TLMH	: Torque limit command (high)	MCFN	: Power line switching
CTH1	: Gear signal 1	SOCN	: Soft start/stop cancel
CTH2	: Gear signal 2	RSL	: Output switching request
SRV	: Spindle reverse rotation	RCH	: Power line state confirm
SFR	: Spindle forward rotation	INDX	: Orientation stop pos. change
ORCM	: Spindle orientation	ROTA	: Rotation direction of ORCM
MEDY	: Machine ready	NRRO	: Shor–cut of ORCM
ARST	: Alarm reset signal	INTG	: Speed integral control signal
*ESP	: Emergency stop	DEFM	: Referencial mode command

- **Control output signals**

Max. 10 signals those are ON are displayed from the following signals:

ALM	: Alarm signal	TML5	: Torque limitation
SST	: Speed zero signal	ORAR	: Orientation end signal
SDT	: Speed detecting signal	CHP	: Power line switched signal
SAR	: Speed arrival signal	CFIN	: Spindle switch complete
LDT1	: Load detecting signal 1	RCHP	: Output switch signal
LDT2	: Load detecting signal 2	RCFN	: Output switch complete signal

10.1.2.5 Correspondence between operation mode and parameters on spindle tuning screen

- **Normal operation mode**

	S11: 1st Main	S12: 1st Sub	S21: 2nd Main	S22: 2nd Sub
Proportional gain(HIGH)	4040	4206	4040	4206
Proportional gain (LOW)	4041	4207	4041	4207
Integral gain(HIGH)	4048	4212	4048	4212
Integral gain(LOW)	4049		4049	
Motor voltage	4083	4236	4083	4236
Regenerative power	4080	4231	4080	4231

- **Orientation mode**

	S11: 1st Main	S12: 1st Sub	S21: 2nd Main	S22: 2nd Sub
Proportional gain(HIGH)	4042	4208	4042	4208
Proportional gain (LOW)	4043	4209	4043	4209
Integral gain(HIGH)	4050	4213	4050	4213
Integral gain(LOW)	4051		4051	
Loop gain (HIGH)	4060	4218	4060	4218
Loop gain (MID, HIGH)	4061		4061	
Loop gain (MID, LOW)	4062	4219	4062	4219
Loop gain (LOW)	4063		4063	
Motor voltage	4084	4237	4084	4237
Gain change upon completion of orientation	4064	4220	4064	4220
Stop position shift	4077	4228	4077	4228
PC–type orientation stop position	4031	4204	4031	4204

- **Synchronization control mode**

Numerals are parameter numbers :

	S11: 1st Main	S12: 1st Sub	S21: 2nd Main	S22: 2nd Sub
Proportional gain(HIGH)	4044	4210	4044	4210
Proportional gain(LOW)	4045	4211	4045	4211
Integral gain(HIGH)	4052	4214	4052	4214
Integral gain(LOW)	4053		4053	
Position loop gain(HIGH)	4065	4221	4065	4221
Position loop gain(MID,HIGH)	4066		4066	
Position loop gain(MID,LOW)	4067	4222	4067	4222
Position loop gain(LOW)	4068		4068	
Motor voltage	4085	4238	4085	4238
Acc./Dec. time constant	4032		4032	
Shift amount	4034		4034	

- **Rigid tapping mode**

Numerals are parameter numbers :

	S11: 1st Main	S12: 1st Sub	S21: 2nd Main	S22: 2nd Sub
Proportional gain(HIGH)	4044	4210	4044	4210
Proportional gain(LOW)	4045	4211	4045	4211
Integral gain(HIGH)	4052	4214	4052	4214
Integral gain(LOW)	4053		4053	
Position loop gain(HIGH)	4065	4221	4065	4221
Position loop gain(MID,HIGH)	4066		4066	
Position loop gain(MID,LOW)	4067	4222	4067	4222
Position loop gain(LOW)	4068		4068	
Motor voltage	4085	4238	4085	4238
ZRN gain %	4091	4239	4091	4239
Grid shift amount	4073	4223	4073	4223

- **Spindle contouring control mode (Cs axis control)**

Numerals are parameter numbers :

	S11: 1st Main	S12: 1st Sub	S21: 2nd Main	S22: 2nd Sub
Proportional gain(HIGH)	4046		4046	
Proportional gain (LOW)	4047		4047	
Integral gain(HIGH)	4054		4054	
Integral gain(LOW)	4055		4055	
Position loop gain(HIGH)	4069		4069	
Position loop gain(MID,HIGH)	4070		4070	
Position loop gain(MID,LOW)	4071		4071	
Position loop gain(LOW)	4072		4072	
Motor voltage	4086		4086	
ZRN gain %	4092		4092	
Reference position shift	4135		4135	

- **Spindle positioning control mode**

	S11: 1st Main	S12: 1st Sub	S21: 2nd Main	S22: 2nd Sub
Proportional gain(HIGH)	4044	4210	4044	4210
Proportional gain (LOW)	4045	4211	4045	4211
Integral gain(HIGH)	4052	4214	4052	4214
Integral gain(LOW)	4053		4053	
Position loop gain(HIGH)	4065	4221	4065	4221
Position loop gain(MID,HIGH)	4066		4066	
Position loop gain(MID,LOW)	4067	4222	4067	4222
Position loop gain(LOW)	4068		4068	
Motor voltage	4085	4238	4085	4238
ZRN gain %	4091	4239	4091	4239
Reference position shift	4073	4223	4073	4223

10.1.3 Automatic Setting of Standard Parameters

The standard parameters related to each motor model can be set automatically.

- The specifications for controlling a motor depend on the specifications defined by the machine tool builder. The parameters defined by the machine tool builder are set as the standard values (initial values) by this automatic setting function.

  Therefore, when performing automatic operation, always set parameters properly according to the parameter list (parameters 4000 and later).

1. Turn on the power in the emergency stop state.
2. Set bit 7 of parameter 4019 to 1.

	#7	#6	#5	#4	#3	#2	#1	#0
4019	LDSP							

Bit 7 (LDSP) The parameters for the serial interface spindle are:

0 : Not set automatically.

☆ 1 : Set automatically.

3. Set a motor model code.

4133	Motor model code

(Reference: Example of α*i* series motor model code)

Code	Motor mode	Amplifier
100	α0.5 (3000/8000min^{-1})	SPM–2.2
101	α1 (3000/8000min^{-1})	SPM–2.2
102	α1.5 (1500/8000min^{-1})	SPM–5.5
103	α2 (1500/8000min^{-1})	SPM–5.5
104	α2/15000 (3000/15000min^{-1})	SPM–5.5
105	α3 (1500/8000min^{-1})	SPM–5.5
106	α6 (1500/8000min^{-1})	SPM–11
107	α8 (1500/6000min^{-1})	SPM–11
108	α12 (1500/6000min^{-1})	SPM–15
109	α15 (1500/6000min^{-1})	SPM–22
110	α18 (1500/6000min^{-1})	SPM–22
111	α22 (1500/6000min^{-1})	SPM–26
112	αP8 (750/6000min^{-1})	SPM–11
113	αP12 (750/6000min^{-1})	SPM–11
114	αP15 (750/6000min^{-1})	SPM–15
115	αP18 (750/6000min^{-1})	SPM–15
116	αP22 (750/6000min^{-1})	SPM–22
117	αP30 (575/4500min^{-1})	SPM–22

4. Turn off the power then back on. Then, the parameters are read.

10.1.4 Warning Interface for the αi Spindle

Overview

For the αi spindle, the warning state can be reported before an alarm is issued. When the warning state is entered, a report to the PMC is sent. For example, this signal can be used for retracting tools or reducing cutting load from the time a warning occurs by the time an overheat alarm occurs. In addition, diagnostic information also contains warning numbers.

Signal

Spindle warning detailed signals SPWRN1 to 9 <F264#0 to #7, F265#0>

[Classification] Output

[Function] Reports the warning number corresponding to the state of the αi spindle amplifier.

[Output condition] When the αi spindle is in the warning state, a warning number consisting of SPWRN1 to SPWRN9 is output as nine–bit binary data.
If warnings occurred on multiple αi spindle amplifiers, the warning number of the αi spindle having the smallest axis number is output.
However, when there is no αi spindle or the system configuration of the spindle includes an additional spindle that is older than the αi spindle, this function is invalid for all spindles.
The warning numbers and their descriptions are shown below.

Warning number	Contents	Details
56	Internal fan stopped	If the internal fan stops, the warning signal is output. Since the spindle continues to operate at this time, use the PMC to perform processing as needed. About one minute after the warning signal is output, an alarm occurs.
88	Radiator cooling fan stopped	If the radiator cooling fan stops, the warning signal is output. Since the spindle continues to operate at this time, use the PMC to perform processing as needed. If the main circuit overheats, an alarm occurs.
04	Open–phase detected in the converter main power supply	If an open–phase is detected in the main power supply, the warning signal is output. Since the spindle continues to operate at this time, use the PMC to perform processing as needed. About one minute (for the PSM) or about five seconds (for the PSMR) after the warning signal is output, an alarm occurs.

Warning number	Contents	Details
58	Converter main circuit overloaded	If the main circuit of the PSM is overloaded, the warning signal is output. Since the spindle continues to operate at this time, use the PMC to perform processing as needed. About one minute after the warning signal is output, an alarm occurs.
59	Converter cooling fan stopped	If the PSM cooling fan stops, the warning signal is output. Since the spindle continues to operate at this time, use the PMC to perform processing as needed. About one minute after the warning signal is output, an alarm occurs.
113	Converter radiator cooling fan stopped	If the PSM radiator cooling fan stops, the warning signal is output. Since the spindle continues to operate at this time, use the PMC to perform processing as needed. If the PSM main circuit overheats, an alarm occurs.

Signal address

	#7	#6	#5	#4	#3	#2	#1	#0
F264	SPWRN8	SPWRN7	SPWRN6	SPWRN5	SPWRN4	SPWRN3	SPWRN2	SPWRN1
F265								SPWRN9

Diagnosis screen

The status of a warning is displayed on the following diagnostic screen.

712	Warning status of first spindle
713	Warning status of second spindle
732	Warning status of third spindle
733	Warning status of fourth spindle

The number of a warning caused on each spindle is indicated.
If there is no warning, 0 is indicated.

NOTE

NOTE
1 For spindles that are older than the αi spindle, this function is invalid.
2 When the system configuration of the spindle (even another spindle) includes an additional spindle that is older than the αi spindle, this function is invalid.

10.1.5 αi Spindle Information Screen

General

In the αi spindle system, ID information output from each of the connected units is obtained and output to the CNC screen.

The units that have ID information are shown below.
(Remark: Some instances of these units do not have ID information.)

- Spindle motor
- Spindle amplifier
- Power supply module

ID information is automatically read from each of the connected units during first startup of the CNC and then recorded. During second or later startup, the ID information recorded during first startup can be compared with the ID information read this time on the screen to check whether the configuration of the connected units is changed. (If there is a difference between them, the alarm mark (*) appears.)

The recorded ID information can be edited. Therefore, the ID information of an unit that does not have ID information can be displayed. (However, the alarm mark (*) indicating a difference between these IDs appears.)

Parameter

	#7	#6	#5	#4	#3	#2	#1	#0
13112							SPI	IDW

[Data type] Bit

IDW The edit of the servo information screen or the spindle information screen is:

0 : Prohibited
1 : Allowed

SPI The spindle information screen is:

0 : Displayed
1 : Not displayed

Displaying the spindle information screen

1 Press the SYSTEM function key, then press the **[SYSTEM]** soft key.

2 Press the **[SP–INF]** soft key to display the screen as shown below.

```
SPINDLE INFORMATION          O0000 N00000

  S1
 SP MOTOR SPEC      A06B-0852-B088#0007
 SP MOTOR S/N       C99XA1234


 SP AMP SPEC        A06B-6102-H106#H520CE
 SP AMP S/N         V0020090601
 PSM SPEC.          A06B-6087-H126#000001
 PSM S/N            V0020031702


)_
 MDI **** *** ***      19:12:05
(SYSTEM)(SV-INF)(SP-INF)(       )(      )
```

NOTE
Spindle information is stored in flash ROM. If there is a difference between the spindle information in flash ROM and the actual spindle information, the corresponding items are preceded by *, as shown below.

```
SPINDLE INFORMATION          O0000 N00000

  S1
 SP MOTOR SPEC      A06B-0852-B088#0007
 SP MOTOR S/N       C99XA1234


*SP AMP SPEC        A06B-6102-H106#H520CE
*SP AMP S/N         V0020090601
 PSM SPEC.          A06B-6087-H126#000001
 PSM S/N            V0020031702


)_
 MDI **** *** ***      19:12:05
(SYSTEM)(SV-INF)(SP-INF)(       )(      )
```

Additional Information

Even if replacement is performed reasonably such as for repairing, this function incorrectly indicates the * mark when it detects the replacement.

To clear the * mark, follow the steps below to update the registered data, as described in the editing section later.

(1) Make the registered data editable. (Parameter IDW (No. 13112#0) = 1)

(2) On the edit screen, place the cursor on the item from which you want to delete the * mark.

(3) Operate the soft keys [CHANGE], [INPUT], and [SAVE] in that order.

Editing the spindle information screen

1 Assume that parameter No.13112#0(IDW) = 1.

2 Press the MDI switch on the machine operator's panel.

3 Follow the steps shown in "Displaying the spindle ID screen" to display the screen as shown below.

```
SPINDLE INFORMATION                O0000 N00000

  S1
 SP MOTOR SPEC        A06B-0852-B088#0007
 SP MOTOR S/N         C99XA1234


 SP AMP SPEC          A06B-6102-H106#H520CE
 SP AMP S/N           V0020090601
 PSM SPEC.            A06B-6087-H126#000001
 PSM S/N              V0020031702


)_
 MDI **** *** ***      19:12:05
(SYSTEM)(SV-INF)(SP-INF)(        )(  (OPRT) )
```

4 To move key–in buffer on the screen, use the ↑ and ↓ keys.

Screen operation on the editing screen

Mode	Key operation	Use
Viewing (*1)	Page key	Scrolls up or down on a screen–by–screen basis.
Editing (*2)	Soft key [INPUT]	Replace the selected ID information at the cursor position with the character string in key–in buffer.
	[CANCEL]	Deletes the character string in key–in buffer.
	[CHANGE]	Transfers the selected ID information at the cursor position that was sent by the servo, to key–in buffer. Only the items preceded by * (*3) are valid.
	[SAVE]	Saves the ID information that has been changed on the spindle information screen in flash ROM.
	[RELOAD]	Cancels the ID information that has been changed on the spindle information screen and loads ID information from flash ROM.
	Page key	Scrolls up or down on a screen–by–screen basis.
	Cursor key	Scrolls up or down the selection of ID information.

*1 Viewing mode: when parameter No.13112#0 = 0

*2 Editing mode: when parameter No.13112#0 = 1

*3 Spindle information is stored in flash ROM. If there is a difference between the spindle information in flash ROM and the actual spindle information, the corresponding items are preceded by *.

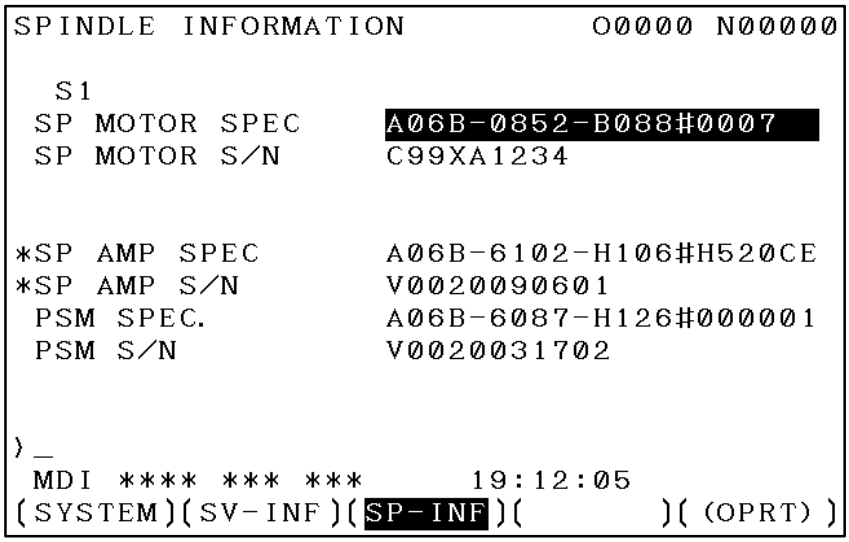

CAUTION

For mixed connection of an αi spindle and a spindle that does not belong to the αi spindle system, ID information of connected units for serial spindle including ai spindles cannot be obtained.

10.2 AC SPINDLE (ANALOG INTERFACE)

10.2.1 Outline of Spindle Control

10.2.1.1 Block diagram

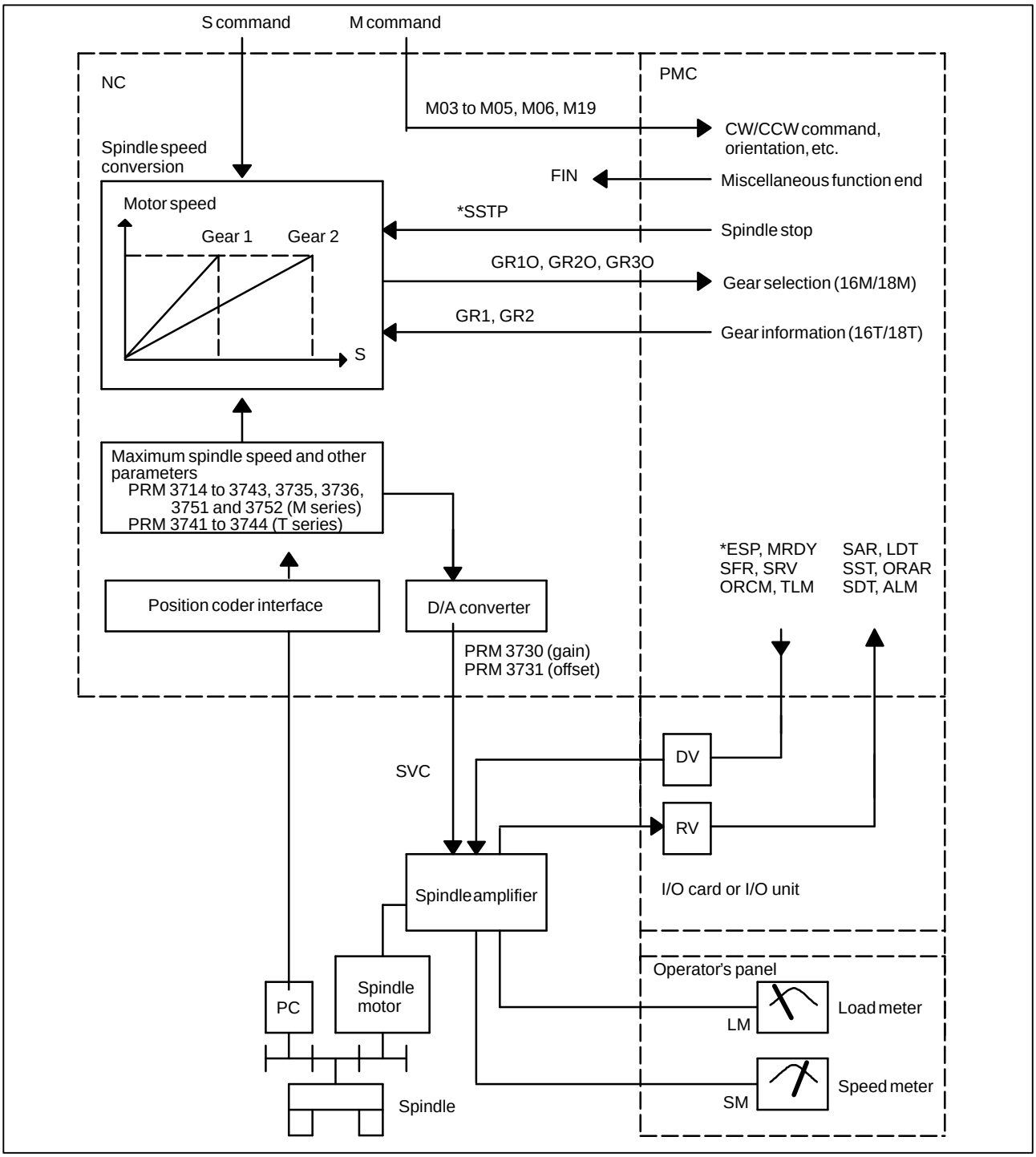

10.2.1.2 Calculation of S analog voltage and related parameters

[M series]

1 Gear change method A (bit 2 of parameter 3705 = 0)

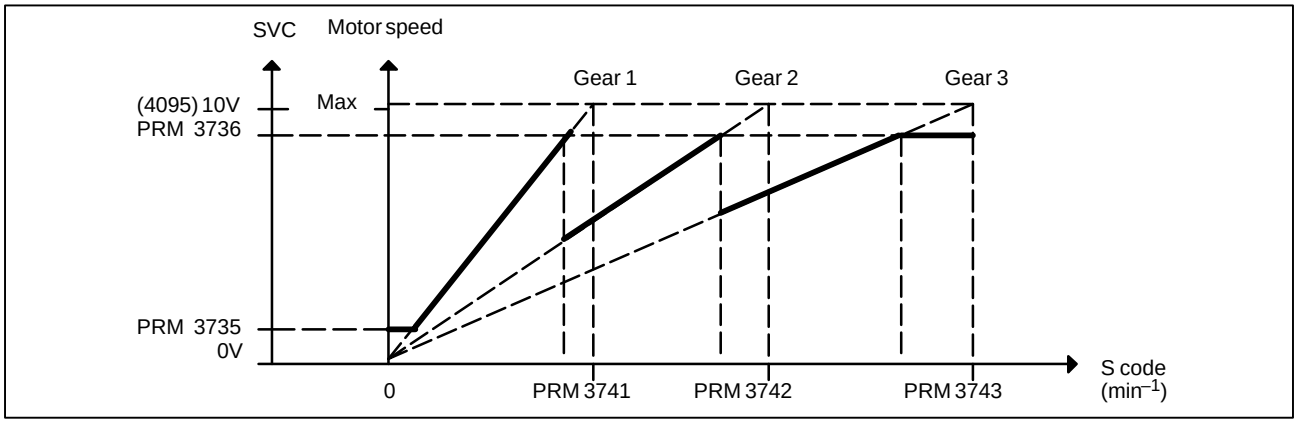

2 Gear change method B (bit 2 of parameter 3705 = 1)

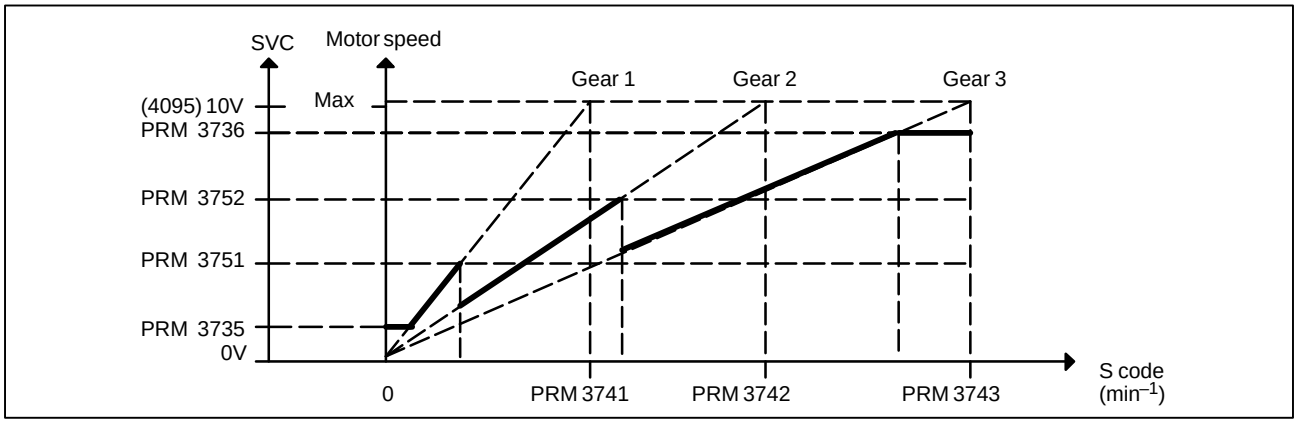

[T series]

Constant surface speed control

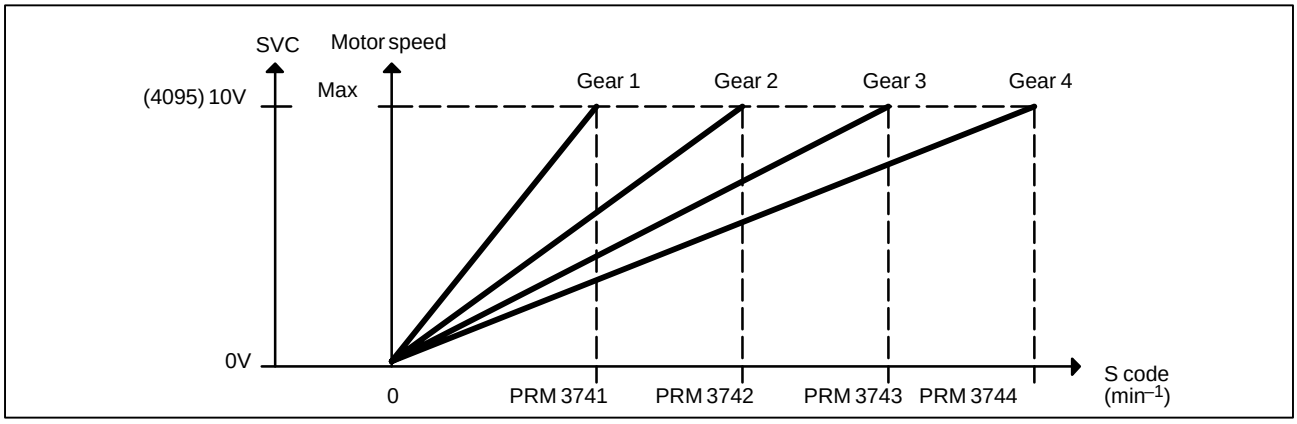

	#7	#6	#5	#4	#3	#2	#1	#0
3706	TCW	CWM						

TCW	CWM	Sign of output voltage
0	0	Analog voltage (+) with both M03 and M04
0	1	Analog voltage (–) with both M03 and M04
1	0	(+) with M03, (–) with M04
1	1	(–) with M03, (+) with M04

[M series]

	#7	#6	#5	#4	#3	#2	#1	#0
3705						SGB		

SGB Spindle speed set when gear change is performed is:

0 : Maximum speed for each gear.

1 : Set by respective parameters. (Parameters 3751, 3752)

3741	Max. spindle speed of gear 1 (1 to 9999) [min^{-1}]
3742	Max. spindle speed of gear 2 (1 to 9999) [min^{-1}]
3743	Max. spindle speed of gear 3 (1 to 9999) [min^{-1}]
3751	Spindle motor speed at the switch point between gear 1 and gear 2
3752	Spindle motor speed at the switch point between gear 2 and gear 3

[Data type] Word

[Valid data range] 0 to 4095

Set a spindle motor speed at each gear switch point when gear switch method B is used (when bit 2 (SGB) of parameter No. 3705 is set to 1).

$$\text{Setting} = \frac{\text{Spindle motor speed at gear switch point}}{\text{Maximum spindle motor speed}} \times 4095$$

3736	Upper limit of the output to the spindle motor
3735	Lower limit of the output to the spindle motor

$$\text{Setting} = \frac{\text{Spindle speed (upper limit/lower limit)}}{\text{Max. spindle speed}} \times 4095$$

[T series]

3741	Max. spindle speed of gear 1 (1 to 9999) [min^{-1}]
3742	Max. spindle speed of gear 2 (1 to 9999) [min^{-1}]
3743	Max. spindle speed of gear 3 (1 to 9999) [min^{-1}]
3744	Max. spindle speed of gear 4 (1 to 9999) [min^{-1}]

10.2.1.3 Tuning S analog voltage (D/A converter)

(1) For M series, change the upper and lower limits as follows:

- When gear change method A is used: Parameter 3736 = 4095, parameter 3735 = 0
- When gear change method B is used: Parameter 3751 = 4095, parameter 3735 = 0

☞ For T series, these changes are not required.

(2) Tuning the D/A converter offset

Specify zero as the spindle speed. Then, by using a digital multimeter, adjust the following parameter so that the voltage at the test pin DA2 on the spindle amplifier printed circuit board is 0 mV.

1 For M series

```
S0; (Specify the command by MDI operation, then press the cycle start button.)
```

2 For T series (in case of G–code system A)

```
G97 S0;   (Specify the command by MDI in the same manner as for M series.)
```

3731	Spindle speed (D/A converter) offset compensation value

(3) Tuning the D/A converter gain

Specify the maximum spindle speed of gear 1. Then, by using a digital multimeter, adjust the following parameter so that the voltage at the test pin DA2 on the spindle amplifier printed circuit board is 10.0 V.

1 For M series

```
Sxxxx ;              (xxxx is the value set in parameter 3741.)
  (Specify the command by MDI operation, then press the cycle start button.)
```

3741	Max. spindle speed of gear 1 (1 to 9999) [min^{-1}]

2 For T series (in case of G–code system A)

```
G97  Sxxxx ;          (xxxx is the value set in parameter 3741.)
  (Specify the command by MDI operation, then press the cycle start button.)
```

3741	Max. spindle speed of gear 1 (1 to 9999) [min^{-1}]

☞ Usually a voltage is output from the D/A converter by only executing an S command. However, the clockwise rotation command (M03) may be required on some machines.

(4) If the output voltage is not correct, perform the following calculation, and change the value of parameter 3730 to adjust the gain of the D/A converter:

$$\text{Setting} = \frac{10\text{V}}{\text{Measured voltage}} \times (\text{Current value of PRM 3730})$$

(5) Execute an S command again and confirm that the output voltage is correct.

☞Restore the original parameter values.

11 TROUBLESHOOTING

This chapter describes troubleshooting procedure.

11.1 CORRECTIVE ACTION FOR FAILURES 725
11.2 NO MANUAL OPERATION NOR AUTOMATIC OPERATION CAN BE EXECUTED 727
11.3 JOG OPERATION CANNOT BE DONE 731
11.4 HANDLE OPERATION CANNOT BE DONE 735
11.5 AUTOMATIC OPERATION CANNOT BE DONE 740
11.6 CYCLE START LED SIGNAL HAS TURNED OFF 748
11.7 NOTHING IS DISPLAYED ON THE LCD WHEN THE POWER IS TURNED ON 750
11.8 THE DISPLAY ON THE LCD UNIT FLASHES . . 754
11.9 INPUT FROM AND OUTPUT TO I/O DEVICES CANNOT BE PERFORMED INPUT/OUTPUT CANNOT BE PERFORMED PROPERLY 755
11.10 IN A CONNECTOR PANEL I/O UNIT, DATA IS INPUT TO AN UNEXPECTED ADDRESS 757
11.11 IN A CONNECTOR PANEL I/O UNIT, NO DATA IS OUTPUT TO AN EXPANSION UNIT 758
11.12 ALARM 85 TO 87 (READER/PUNCHER INTERFACE ALARM) . . . 759
11.13 ALARM 90 (REFERENCE POSITION RETURN IS ABNORMAL) 765
11.14 ALARM 300 (REQUEST FOR REFERENCE POSITION RETURN) 767
11.15 ALARM 401 (V READY OFF) 768
11.16 ALARM 404 (V READY ON) 772
11.17 ALARM 462 (SEND CNC DATA FAILED) ALARM 463 (SEND SLAVE DATA FAILED) 775
11.18 ALARM 417 (DIGITAL SERVO SYSTEM IS ABNORMAL) . . 778
11.19 ALARM 700 (OVERHEAT: CONTROL UNIT) . . 779
11.20 ALARM 701 (OVERHEAT: FAN MOTOR) 780
11.21 ALARM 704 (SPINDLE SPEED FLUCTUATION DETECTION ALARM) 782
11.22 ALARM 749 (SERIAL SPINDLE COMMUNICATION ERROR) 783
11.23 ALARM 750 (SPINDLE SERIAL LINK STARTUP FAILURE) . 784
11.24 ALARM 5134 (FSSB: OPEN READY TIME OUT) ALARM 5135 (FSSB: ERROR MODE) ALARM 5137 (FSSB: CONFIGURATION ERROR) ALARM 5197 (FSSB: OPEN TIME OUT) ALARM 5198 (FSSB: ID DATA NOT READ) . . . 787

11.25 ALARM 5136
(FSSB: NUMBER OF AMPS IS SMALL) 791
11.26 ALARM 900 (ROM PARITY) 794
11.27 ALARMS 910 AND 911 (SRAM PARITY) 796
11.28 ALARMS 912 TO 919 (DRAM PARITY) 799
11.29 ALARMS 920 AND 921 (SERVO ALARMS) 801
11.30 ALARM 926 (FSSB ALARM) 805
11.31 ALARM 930 (CPU INTERRUPT) 811
11.32 ALARM 935 (SRAM ECC ERROR) 813
11.33 ALARM 950 (PMC SYSTEM ALARM) 815
11.34 ALARM 951 (PMC WATCHDOG ALARM) 818
11.35 ALARM 972
(NMI ALARM ON AN OPTION BOARD) 819
11.36 ALARM 973
(NMI ALARM WITH AN UNKNOWN CAUSE) . 820
11.37 ALARM 974 (F–BUS ERROR) 821
11.38 ALARM 975 (BUS ERROR) 824
11.39 ALARM 976 (LOCAL BUS ERROR) 825
11.40 SERVO ALARMS 826
11.41 SPC ALARMS 831
11.42 SPINDLE ALARMS 832

11.1 CORRECTIVE ACTION FOR FAILURES

When a failure occurs, it is important to correctly grasp what kind of failure occured and take appropriate action, to promptly recover the machine.
Check for the failure according to the following procedure :

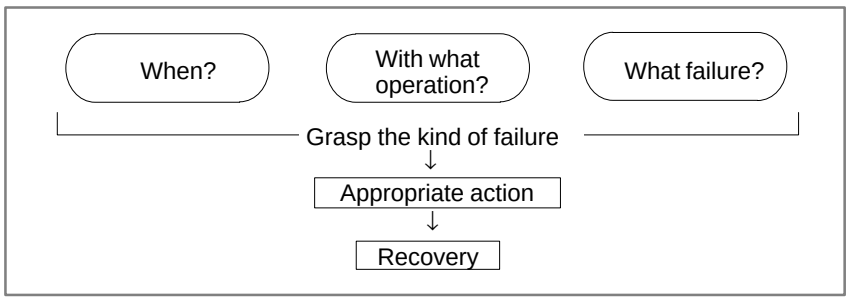

11.1.1 Investigating the Conditions Under which Failure Occurred

(1) When and how many times (frequency of occurrences)
(2) With what operation
(3) What failure occurred

1 When did the failure occur?
- Date and time?
- Occurred during operation? (how long was the operation?)
- Occurred when the power was turned on?
- Was there any lightening surge, power failure, or other disturbances to the power supply?

How many times has it occurred
- Only once?
- Occurred many times ? (How many times per hour, per day, or per month?)

2 With what operation did it occur ?
- What was the NC mode when the failure occurred?
  Jog mode/memory operation mode /MDI mode /reference position return mode
- If during program operation,
  1) Where in the program ?
  2) Which program No. and sequence No. ?
  3) What program ?
  4) Occurred during axial movement ?
  5) Occurred during the execution of an M/S/T code ?
  6) Failure specific to the program ?
- Does the same operation cause the same failure ?
  (Check the repeatability of the failure.)
- Occurred during data input/output ?

<Feed axes and spindles>
- For a failure related to feed axis servo
  1) Occurred at both low feedrate and high feedrate ?
  2) Ocurred only for a certain axis ?

- For a failure related to spindles
  When did the failure occur ? (during power–on, acceleration, deceleration, or constant rotation)

3 What failure occurred ?

- Which alarm was displayed on the alarm display screen?
  (Check the axis along which an alarm has occurred for alarms 300 to 599.)
- Is the screen correct ?
- If machining dimensions are incorrect
  1) How large is the error ?
  2) Is the position display on the CRT correct ?
  3) Are the offsets correct ?

4 Other information

- Is there noise origin around machine?
  If the failure has not occurred frequently, the cause may be external noise to the power supply or inductive noise on machinery cables. Operate other machines connected to the same power line and see if noise come from the relays or compressors.
- Is it taken any countermeasure for noise in machine side?
- Check the following for the input power supply voltage :
  1) Is there variation in the voltage ?
  2) Are the voltages different depending on the phase ?
  3) Is the standard voltage supplied ?
- How high is the ambient temperature of the control unit?
  Refer to manual about noise.
- Has excessive vibration been applied to the control unit?

5 When you contact our service center, specify the following items :

1) Name of the NC unit
2) Name of the machine tool builder and type of machine
3) Software series/version of the NC
4) Specifications of the servo amplifier and motor
   (for a failure related to the servo)
5) Specifications of the spindle amplifier and spindle motor
   (for a failure related to a spindle)

- See the drawing issued by the machine tool builder for the locations of the NC unit and servo/spindle amplifiers.
- We use the following specification codes :
  Servo /spindle amplifier : A06B–□□□□–H□□□
  Servo/spindle amplifier : A06B–□□□□–B□□□

NOTE
The mark '□' represents a number.

11.2 NO MANUAL OPERATION NOR AUTOMATIC OPERATION CAN BE EXECUTED

Points

(1) Execute the following procedure when no manual nor automatic operation is done

(2) Check whether position display shows correct position

(3) Check CNC status display

(4) Check CNC internal status using diagnostic function

Causes and Countermeasures

1. Position display (relative, absolute, machine coordinate) does not change

(1) Check CNC status display (Refer to Section 1.9 CNC STATUS DISPLAY for detail.)

(a) Emergency stop status (Emergency stop signal is turned on)

If status display shows EMG the emergency stop signal is input.

Check the following signal using the PMC's diagnostic function (PMCDGN).

	#7	#6	#5	#4	#3	#2	#1	#0
X1008				*ESP				
G0008				*ESP				

ESP=0 indicates that emergency stop signal is input.

(b) It is a reset status

When RESET is displayed, any of a reset is functioned. Check the following signal using the PMC's diagnostic funciton (PMCDGN).

1) An input signal from the PMC functions

	#7	#6	#5	#4	#3	#2	#1	#0
G0008	ERS	RRW						

When ERS is 1, external reset signal is input.
When RRW is 1, reset & rewing signal is input.

2) RESET key on the MDI keyboard functions

When the signals in 1) are 0, [RESET] key may be functioning.

Check the contact of [RESET] key using a tester.

When it is abnormal, change the keyboard.

(c) Confirm the status of modes

Operation mode status is displayed on the lower part of CRT as follows :
If nothing is displayed, mode select signal is not input. Check mode select signal using PMC's diagnostic function (PMCDGN).
For details, refer to section 1.9 CNC STATUS DISPLAY.

(Example of display)

JOG : Manual operation (JOG) mode
HND : Manual handle (MPG) mode
MDI : Manual data input (MDI) mode
MEM : Automatic operation (Memory) mode
EDIT: EDIT (Memory edit) mode

<Mode select signal>

	#7	#6	#5	#4	#3	#2	#1	#0
G0043						MD4	MD2	MD1
						↓	↓	↓
Manual operation (JOG) mode						1	0	1
Manual handle (MPG) mode						1	0	0
Manual data input (MDI) mode						0	0	0
Automatic operation (Memory) mode						0	0	1
EDIT (Memory edit) mode						0	1	1

(2) Check diagnostic data 000 to 025 of the CNC Check an item for which 1 is displayed

	No.	Message	Display
	000	WAITING FOR FIN SIGNAL	: 0
	001	MOTION	: 0
	002	DWELL	: 0
a.	003	IN–POSITION CHECK	: 0
	004	FEEDRATE OVERRIDE 0%	: 0
b.	005	INTERLOCK / START LOCK	: 1 (Example)
	006	SPINDLE SPEED ARRIVAL CHECK	: 0
	010	PUNCHING	: 0
	011	READING	: 0
	012	WAITING FOR (UN) CLAMP	: 0
c.	013	JOG FEEDRATE OVERRIDE 0%	: 0
d.	014	WAITING FOR RESET, ESP, RRW OFF	: 0
	015	EXTERNAL PROGRAM NUMBER SEARCH	: 0

Items with a to d relate with manual and automatic operation and its detail is shown below.

a. In–position check is being done

It shows that positioning is not yet completed. Check the contents of the following diagnostic number. (It is 1 in the following condition)

DGN 0300 [Position Error] >PARAM 1826 [In–position width]

1) Check the parameters according to the parameter list.

1825	Servo loop gain per axis (Normal : 3000)

2) Servo system may be abnormal. Refer to servo alarm 400, 410, and 411.

b. Interlock or start lock signal is input

There are a plural interlock signals. Check at first which interlock signal is used by the machine tool builder at the parameters shown below.

	#7	#6	#5	#4	#3	#2	#1	#0
3003				DAU	DIT	ITX		ITL

#0 ITL=0 shows interlock signal *IT is effective. To 1)
#2 ITX=0 shows interlock signal *ITn is effective. To 2)
#3 DIT=0 shows interlock signal ±MITn is effective. To 3)
#4 DAU=When it is "1," the interlock signal (±MITn) is effective even in automatic operation.
Go to 3).

Check state of effective interlock signals using the diagnostic function (PMCDGN) of the PMC.

1) Interlock signal (*IT) is input.

	#7	#6	#5	#4	#3	#2	#1	#0
G0008								*IT

*IT=0 shows that interlock signal is input.

2) Axis interlock signal (*ITn) is input.

	#7	#6	#5	#4	#3	#2	#1	#0
G0130	*IT8	*IT7	*IT6	*IT5	*IT4	*IT3	*IT2	+IT1

*ITn=0 shows interlock signal is input.

3) Interlock signal per axis and direction (±MITn) is input.

- M series

	#7	#6	#5	#4	#3	#2	#1	#0
G0132					+MIT4	+MIT3	+MIT2	+MIT1
G0134					–MIT4	–MIT3	–MIT2	–MIT1

- T series

	#7	#6	#5	#4	#3	#2	#1	#0
X0004			–MIT2	+MIT2	–MIT1	+MIT1		

±MITn=1 shows interlock signal per axis and direction is input.
* In T series, ±MITn is effective only when the manual operation is used.

c. Jog feedrate override is 0%

Check the signals using PMC's diagnostic function (PMCDGN)

	#7	#6	#5	#4	#3	#2	#1	#0
G0010	*JV7	*JV6	*JV5	*JV4	*JV3	*JV2	*JV1	*JV0
G0011	*JV15	*JV14	*JV13	*JV12	*JV11	*JV10	*JV9	*JV8

When the override is 0% all bits of the above address becomes 1111 . . . . 1111 or 0000 . . . . . 0000.

*JV15 . . . . . JV0	Override
1111 1111 1111 1111	0.00%
1111 1111 1111 1110	0.01%
:	:
1101 1000 1110 1111	100.00%
:	:
0000 0000 0000 0001	655.34%
0000 0000 0000 0000	0.00%

d. NC is in a reset state

In this case, RESET is also displayed on the status display. Check it using the procedure of b above.

2. When machine coordinate value does not update on position display

(1) Machine lock signal (MLK) is input.

	#7	#6	#5	#4	#3	#2	#1	#0
G0044								MLK
G0108	MLK8	MLK7	MLK6	MLK5	MLK4	MLK3	MLK2	MLK1

MLK : All axes machine lock

MLKn : Each axis machine lock

When the signal is 1, the corresponding machine lock signal is input.

11.3 JOG OPERATION CANNOT BE DONE

Points

(1) Check whether position display is operating.
(2) Check CNC status display.
(3) Check internal status using Diagnostic funciton.

Causes and Remedies

1. Position display (relative, absolute, machine cooordinate) does not change

(1) Check mode selection status (JOG mode is not selected).

When status display shows JOG, it is normal.
When status display does not show JOG, mode select signal is not selected correctly. Confirm the mode select signal using PMC's diagnostic function (PMCDGN).

<Mode select signal>

	#7	#6	#5	#4	#3	#2	#1	#0
G0043						MD4	MD2	MD1
						↓	↓	↓
	Manual operation (JOG) mode					1	0	1

(2) Feed axis and direction select signal is not input Check the signal using PMC's diagnostic function (PMCDGN).

	#7	#6	#5	#4	#3	#2	#1	#0
G0100	+J8	+J7	+J6	+J5	+J4	+J3	+J2	+J1
G0102	–J8	–J7	–J6	–J5	–J4	–J3	–J2	–J1
G0086					–Ja	+Ja	–Jg	+Jg

When a bit is "1", the corresponding feed axis direction selection signal has been entered.

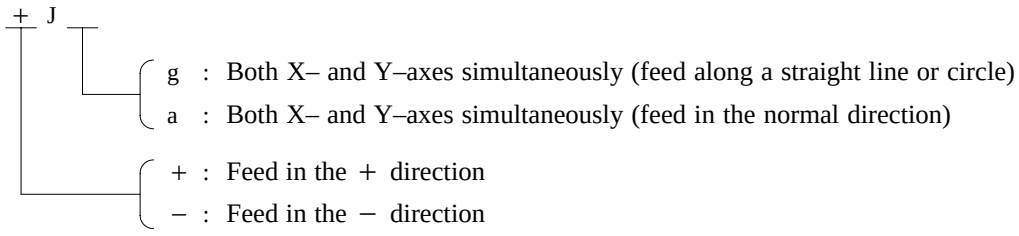

Example)
In the normal state, pressing the "+X" button on the operator's panel causes the signal +Jn to be displayed as "1".

* This signal becomes effective when the rise of the signal is detected. If, therefore, the direction selection signal has been entered before jog mode selection, axis movement is not performed; set the bit "0" and then re–check the signal.

* By defining a straight line or arc in the CNC beforehand using the R area of the PMC, +Jg and ± Ja allow the tool to move along both X– and Y–axes simultaneously. The exchange of information with the R area of the PMC is performed by the macro software or PMC sequence program created by the MTB.

(3) Check CNC's diagnostic function 000 to 015. Check the items for which 1 is displayed at right side.

	No.	Message	Display
	000	WAITING FOR FIN SIGNAL	: 0
	001	MOTION	: 0
	002	DWELL	: 0
a.	003	IN–POSITION CHECK	: 0
	004	FEEDRATE OVERRIDE 0%	: 0
b.	005	INTERLOCK / START LOCK	: 1 (Example)
	006	SPINDLE SPEED ARRIVAL CHECK	: 0
	010	PUNCHING	: 0
	011	READING	: 0
	012	WAITING FOR (UN) CLAMP	: 0
c.	013	JOG FEEDRATE OVERRIDE 0%	: 0
d.	014	WAITING FOR RESET, ESP, RRW OFF	: 0
	015	EXTERNAL PROGRAM NUMBER SEARCH	: 0

Items with a to d relate with manual and automatic operation and its detail is shown below.

a. In–position check is being done

It shows that positioning is not yet completed. Check the contents of the following diagnostic number. (It is 1 in the following condition)

DGN 0300 [Position Error] >PARAM 1826 [In–positio width]

1) Check the parameters according to the parameter list.

1825	Servo loop gain per axis (Normal : 3000)

2) Servo system may be abnormal. Refer to servo alarm 400, 410, and 411.

b. Interlock or start lock signal is input

There are a plural interlock signals. Check at first which interlock signal is used by the machine tool builder at the parameters shown below.

		#7	#6	#5	#4	#3	#2	#1	#0
PARAM	3003					DIT	ITX		ITL

#0 ITL=0 shows interlock signal *IT is effective. To 1)
#2 ITX=0 shows interlock signal *ITn is effective. To 2)
#3 DIT=0 shows interlock signal ±MITn is effective. To 3)
Check state of effective interlock signals using the diagnostic function (PMCDGN) of the PMC.

1) Interlock signal (*IT) is input.

	#7	#6	#5	#4	#3	#2	#1	#0
G0008								*IT

*IT=0 shows that interlock signal is input.

2) Axis interlock signal (*ITn) is input.

	#7	#6	#5	#4	#3	#2	#1	#0
G0130	*IT8	*IT7	*IT6	*IT5	*IT4	*IT3	*IT2	+IT1

*ITn=0 shows interlock signal is input.

3) Interlock signal per axis and direction (+/– MITn) is input

· M series

	#7	#6	#5	#4	#3	#2	#1	#0
G0132					+MIT4	+MIT3	+MIT2	+MIT1
G0134					–MIT4	–MIT3	–MIT2	–MIT1

· T series

	#7	#6	#5	#4	#3	#2	#1	#0
X0004			–MIT2	+MIT2	–MIT1	+MIT1		

±MITn=1 shows interlock signal per axis and direction is input.

* For the T series, ±MITn is valid only for manual operation.

c. Jog feedrate override is 0%

Check the signals using PMC's diagnostic function (PMCDGN)

	#7	#6	#5	#4	#3	#2	#1	#0
G0010	*JV7	*JV6	*JV5	*JV4	*JV3	*JV2	*JV1	*JV0
G0011	*JV15	*JV14	*JV13	*JV12	*JV11	*JV10	*JV9	*JV8

When the override is 0% all bits of the above address becomes 1111 . . . . 1111 or 0000 . . . . . 0000.

*JV15 . . . . . JV0	Override
1111 1111 1111 1111	0.00%
1111 1111 1111 1110	0.01%
:	:
1101 1000 1110 1111	100.00%
:	:
0000 0000 0000 0001	655.34%
0000 0000 0000 0000	0.00%

d. NC is in a reset state

In this case, RESET is also displayed on the status display. Check it using the procedure of 1 above.

(4) Jog feed rate setting (Parameter) is not correct.

1423	Jog feedrate per axis

(5) Manual feed per revolution is selected (T series)

This funciton feeds an axis synchronized with spindle rotation and whether this function is used or not is selected by the following parameter:

	#7	#6	#5	#4	#3	#2	#1	#0
1402					JRV			

#3 (JRV) 0 : Jog feed is of feed per minute

1 : Jog feed is of feed per revolution

(a) When parameter JRV is set to 1, feed rate of the axis is calculated by synchronizing with rotation of the spindle. Therefore, rotate the spindle.

(b) If the axis does not move even when the spindle is rotated, check the detector of the spindle (position coder) and the cable between the position coder and the CNC if it is short–circuited or ungrounded.Refer to 2.4 for connection diagram.

(6) The specified axis is the index table indexing axis. <M series>

For the index table indexing axis (B–axis), jog feed, incremental feed, and manual handle feed cannot be performed.

11.4 HANDLE OPERATION CANNOT BE DONE

Causes and actions

If manual handle operation cannot be performed, the probable causes include the following:

- The servo is not activated.
- Manual pulse generators are not connected properly to the I/O module.
- The I/O link of the I/O module is not allocated, or is not allocated properly.
- A related input signal is not input due to a parameter setting error.

1 The servo is not activated

Check that the LED on the servo amplifier indicates “0”. If a number other than “0” is indicated, the servo is not activated. In this state, even JOG operation and automatic operation cannot be operated.
Check the servo–related parameters and the wiring.

2 Checking the manual pulse generators

(1) Cable failures (such as breaks)

Examine the cables for faults such as breaks and short–circuits, referring to the figure below.

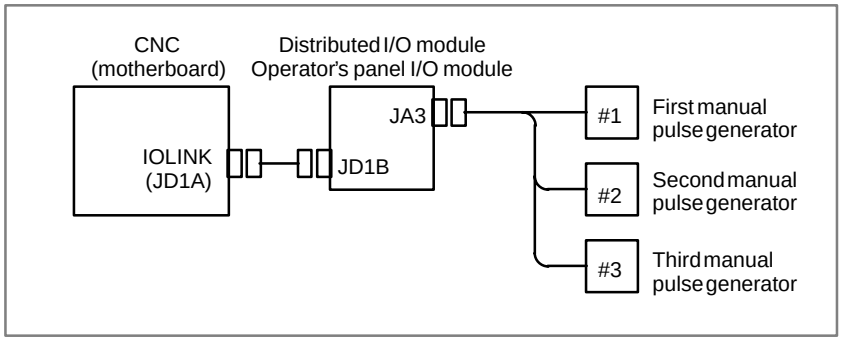

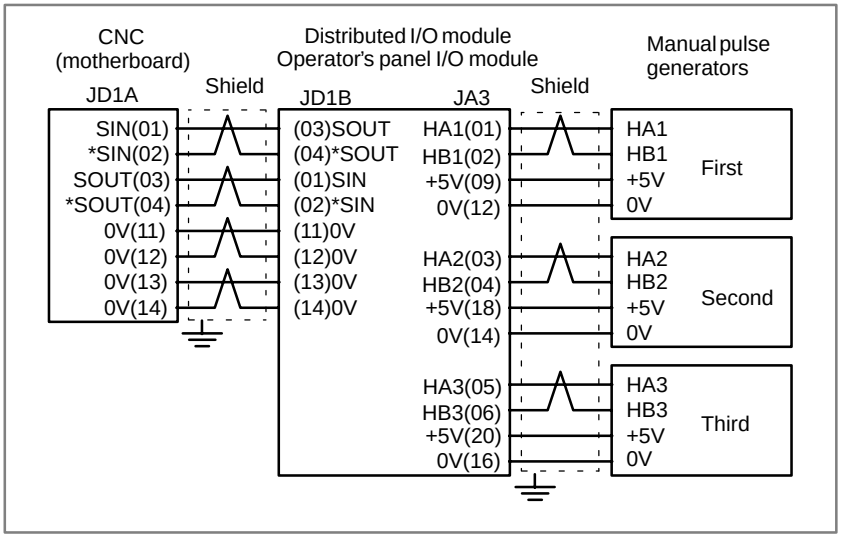

(2) Manual pulse generator failures

When rotated, a manual pulse generator generates the signals shown below. Using an oscilloscope, measure the signals from the screw terminal block located at the rear of a manual pulse generator. If no signals are output, measure the +5 V voltage.

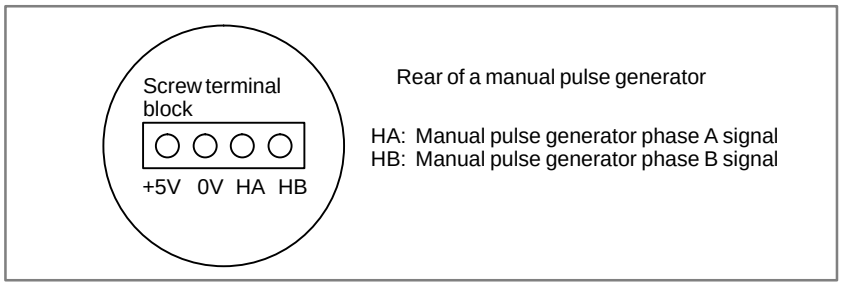

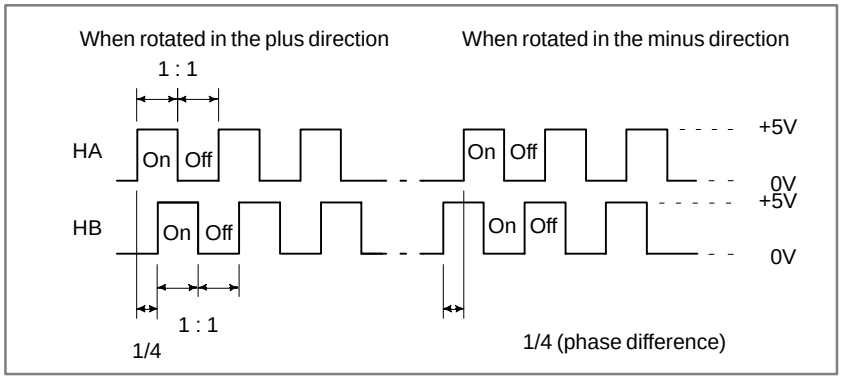

Check the on/off ratio and the phase difference between HA and HB.

3 Allocation of the I/O link of the I/O module

If the I/O module is not allocated properly in I/O link allocation, the pulses of the manual pulse generators are not transmitted to the CNC, making it impossible to perform manual handle operation.
The I/O modules to which manual pulse generators can be connected are listed below.

Name	Specifications
I/O module for connector panel (extended module A)	A03B–0815–C002
I/O module for operator's panel (supporting matrix input)	A20B–2002–0470
I/O module for operator's panel	A20B–2002–0520
Interface unit for machine operator's panel	A20B–2201–0110
Main panel A of machine operator's panel	A02B–0236–0230
Main panel B of machine operator's panel	A02B–0236–0231
Main panel A1 of machine operator's panel	A02B–0236–0240
Main panel B1 of machine operator's panel	A02B–0236–0241

If a multiple number of these modules are used and are allocated so that they use a manual pulse generator, the module nearest the CNC becomes effective because of the I/O link connection.

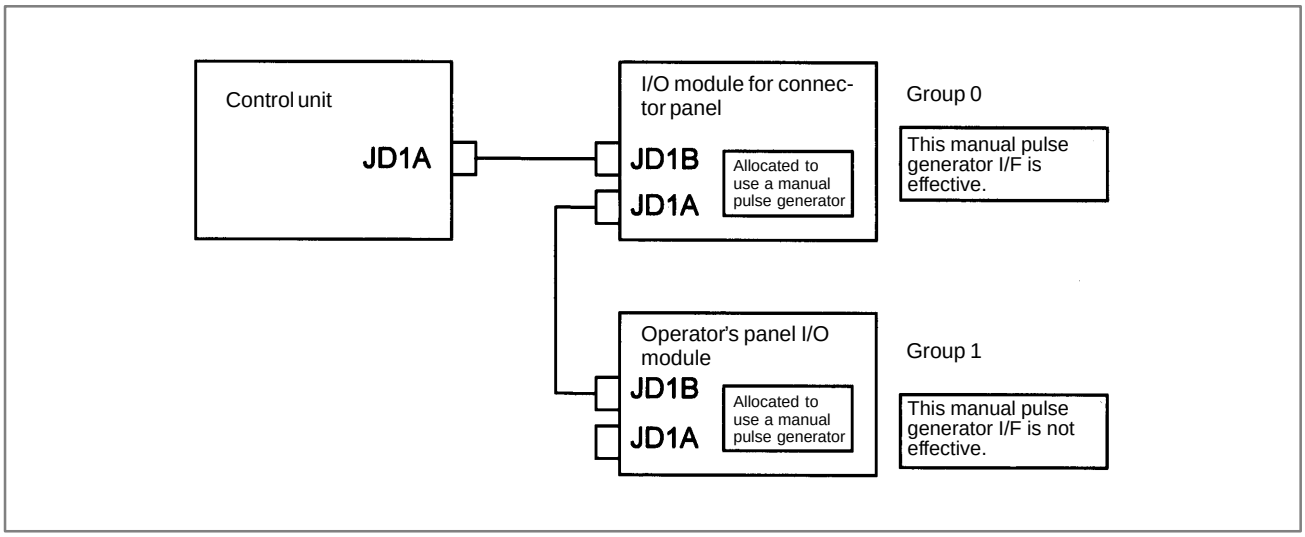

In this example, the manual pulse generator connected to the I/O module for a connector panel in group 0 is effective.

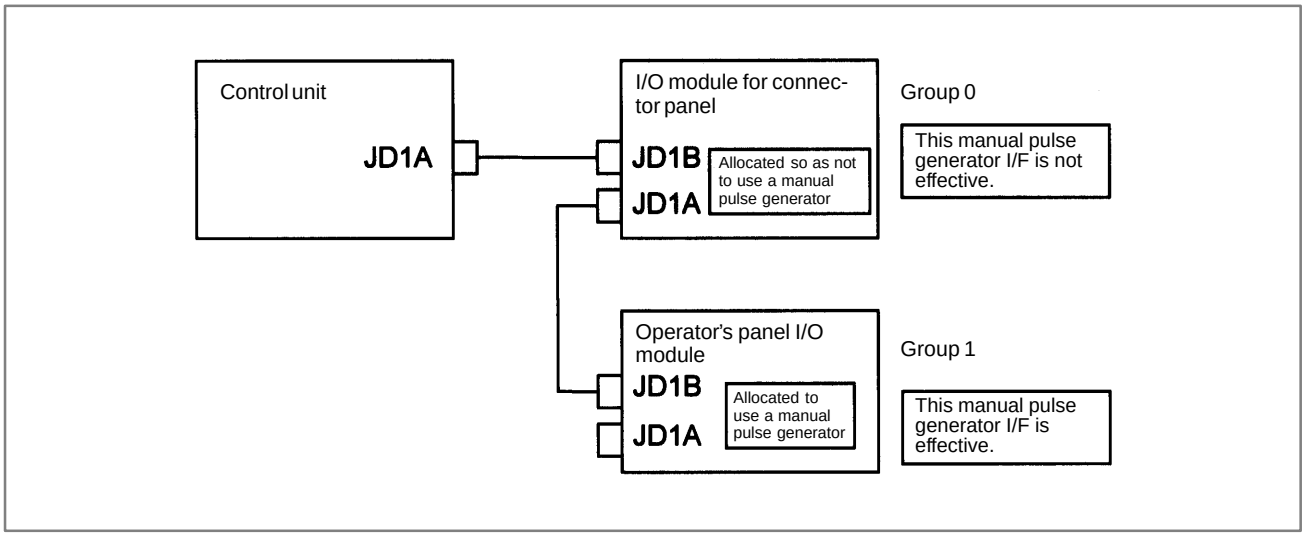

If the I/O module for a connector panel in group 0 is allocated so as not to use a manual pulse generator, as in this example, the manual pulse generator interface of the operator's panel I/O module in group 1 is effective.

The allocation can be confirmed on the allocation edit screen. Selecting [EDIT] and then [MODULE] from the PMC screen causes the allocation edit screen to be displayed.

After editing allocation, write the changes to the FROM on the [I/O] screen. Otherwise, the changes will be lost when the power is turned off.

If allocation is performed properly, when a manual pulse generator is rotated, the bits count up/down in the area of the corresponding input signal (X). Select [PMCDGN] and then [STATUS] from the PMC screen to display the corresponding address, and rotate the manual pulse generator to check that the bits count up/down.

4 Checking the parameters and input signals

(1) Check CNC status display at lower left corner of the CRT. (See Section 1.9.)

When the status display shows HND, mode selection is correct. If it is not HND, mode select signal is not input correctly. Check the mode select signal using the PMC's diagnostic function(PMCDGN).

	#7	#6	#5	#4	#3	#2	#1	#0
G0043						MD4	MD2	MD1
						↓	↓	↓
	Manuale handle mode					1	0	0

(2) Manual handle feed axis select signal is not input.

Check the signals using PMC's diagnostic function (PMCDGN).

	#7	#6	#5	#4	#3	#2	#1	#0
G0018	HS2D	HS2C	HS2B	HS2A	HS1D	HS1C	HS1B	HS1A
G0019					HS3D	HS3C	HS3B	HS3A

When axis select switch for manual handle feed is selected on the machine operator's panel, if the signals are input as follows, it is normal.

Selected axis	HSnD	HSnC	HSnB	HSnA
no selection	0	0	0	0
1st axis	0	0	0	1
2nd axis	0	0	1	0
3rd axis	0	0	1	1
4th axis	0	1	0	0
5th axis	0	1	0	1
6th axis	0	1	1	0
7th axis	0	1	1	1
8th axis	1	0	0	0

NOTE

In the above table, n is the number of the manual pulse generator
(MPG) and up to 3 MPGs can be used.
A feed axis is selected by 4–bit code of A to D.

(3) Manual handle feed multiplication is not correct

Check the following signals using PMC's PCDGN. Also confirm the following parameters based on the parameter list.

	#7	#6	#5	#4	#3	#2	#1	#0
G0019			MP2	MP1				

In handle mode, the travel distance per step can be changed.

MP2	MP1	Step feed	Handle feed
0	0	× 1	× 1
0	1	× 10	× 10
1	0	× 100	× Mn
1	1	×1000	× Nn

		#7	#6	#5	#4	#3	#2	#1	#0
PARAM	7102								HNGx

#0(HNGx) The direction of rotation of the manual pulse generator and the direction of the travel of the machine are:

0 : Same
1 : Opposite

PARAM	7110	Number of manual pulse generators used (1 to 3).

(4) The specified axis is the index table indexing axis. <M series>

For the index table indexing axis (B–axis), jog feed, incremental feed, and manual handle feed cannot be performed.

11.5 AUTOMATIC OPERATION CANNOT BE DONE

Points

(1) Check manual operation is possible.

(2) Check the status of cycle start LED on machine operator's manual.

(3) Check status of CNC.

Causes and Remedies

When manual operation is either impossible, perform countermeasure, based on the previous item "Jog operation cannot be done".
Confirm that a correct mode is selected according to the mode select status of CNC status display. Also, by confirming the automatic operation status it is possible to identify cycle operation, feed hold and cycle stop state.

1. When cycle operation is not started (Cycle start LED does not light)

"****" is displayed at status display on CRT.

(1) Mode select signal is not correct.

When the mode select signal is input correctly, following status display is done.
MDI :Manual data input mode (MDI)
MEM :Memory operation mode
RMT :Remote operation mode

If status display does not show a correct status, check the mode signal with following diagnosis function of PMC side (PMCDGN).

	#7	#6	#5	#4	#3	#2	#1	#0
G0043			DNCI			MD4	MD2	MD1

DNCI	MD4	MD2	MD1	Mode select
–	0	0	0	Manual data input mode
0	0	0	1	Memory operation mode
1	0	0	1	Remote operation mode

(2) Cycle start signal is not input

This signal turns 1 when cycle start button is pressed and turns 0 when it is released. The cycle start actuates when it changes from 1 to 0.
Check the state of the signal using PMC's diagnostic function(PMCDGN).

	#7	#6	#5	#4	#3	#2	#1	#0
G0007						ST		

#2 (ST) : Cycle start signal

(3) Feed hold signal is input

Under normal state, the feed hold signal is 1 when the feed hold button is not pressed.
Check the state of this signal using the PMC's diagnostic function (PMCDGN) .

	#7	#6	#5	#4	#3	#2	#1	#0
G0008			*SP					

#5 (*SP) : Feed hold signal

2. When an automatic operation is in progress (Cycle start LED is lit)

CNC's status display shows "STRT" on the CRT.

(1) Check the contents of diagnostic nos. 000 to 015.

	No.	Message	Display
a.	000	WAITING FOR FIN SIGNAL	: 1 (Example)
b.	001	MOTION	: 0
c.	002	DWELL	: 0
d.	003	IN–POSITION CHECK	: 0
e.	004	FEEDRATE OVERRIDE 0%	: 0
f.	005	INTERLOCK / START LOCK	: 0
g.	006	SPINDLE SPEED ARRIVAL CHECK	: 0
	010	PUNCHING	: 0
	011	READING	: 0
	012	WAITING FOR (UN) CLAMP	: 0
h.	013	JOG FEEDRATE OVERRIDE 0%	: 0
i.	014	WAITING FOR RESET, ESP, RRW OFF	: 0
	015	EXTERNAL PROGRAM NUMBER SEARCH	: 0

Items with a to i relate with an automatic operation and their details are as follows :

a. An auxiliary function is being executed (waiting for FIN signal)

An auxiliary function (M/S/T/B) specified in a program is not ended. Check according to the following procedure.
First, check the parameter setting to confirm the type of the interface of the auxiliary function.

	#7	#6	#5	#4	#3	#2	#1	#0
3001	HSIF							

#7(HSIF) 0 : M/S/T/B is of normal interface.
1 : M/S/T/B is of high–speed interface.

1) Normal interface

When the auxiliary function finish signal turns from 1 to 0, the auxiliary function is supposed to be ended and the next block is read for operation. Confirm the status of this signal using PMC's diagnostic function(PMCDGN).

	#7	#6	#5	#4	#3	#2	#1	#0
G0004					FIN			

#3 (FIN) : Auxiliary function finish signal

2) High–speed interface

The auxiliary function is supposed to be ended when the signals are in the following state. Confirm it using PMC's diagnostic function (PMCDGN).

<M series>

	#7	#6	#5	#4	#3	#2	#1	#0
G0005	BFIN				TFIN	SFIN		MFIN

#0(MFIN) : M function finish signal

#2(SFIN) : S function finish signal

#3(TFIN) : T function finish signal

#4(BFIN) : 2nd auxiliary function finish signal

	#7	#6	#5	#4	#3	#2	#1	#0
F0007	BF				TF	SF		MF

#0(MF) : M function strobe signal

#2(SF) : S function strobe signal

#3(TF) : T function strobe signal

#7(BF) : 2nd auxiliary function strobe signal

<T series>

	#7	#6	#5	#4	#3	#2	#1	#0
G0005				BFIN	TFIN	SFIN		MFIN

#0(MFIN) : M function completion signal

#2(SFIN) : S function completion signal

#3(TFIN) : T function completion signal

#4(BFIN) : Second auxiliary function completion signal

	#7	#6	#5	#4	#3	#2	#1	#0
F0007				BF	TF	SF		MF

#0(MF) : M function strobe signal

#2(SF) : S function strobe signal

#3(TF) : T function strobe signal

#4(BF) : Second auxiliary function strobe signal

<M/T series>

	#7	#6	#5	#4	#3	#2	#1	#0
G0004			MFIN3	MFIN2				

#4(MFIN2) : Second M function completion signal

#5(MFIN3) : Third M function completion signal

	#7	#6	#5	#4	#3	#2	#1	#0
F0008			MF3	MF2				

#4(MF2) : Second M function strobe signal

#5(MF3) : Third M function strobe signal

* The second and third M functions are enabled only when bit 7 (M3B) of parameter No. 3404 is set to 1.

Signal	End state	
Finish signal	0	1
store signal	0	1

b. Travel command is being executed

CNC is reading an axis command (X,Y,Z,...) in a program and giving the command to the axis.

c. A dwell command is being executed

CNC is reading a dwell command (G04) in a program and is executing the dwell command.

d. In–position check (confirming positioning) is being done

Positioning (G00) to a specified position of a specified axis is not completed.
Whether positioning is completed or not is checked as the servo position error amount. Check it CNC's diagnostic function as follows:

DGN no.300 [Position Error] > PARAM 1826 [In–position width]

Position error amount almost becomes 0, when positioning of an axis completes and when the amount becomes within the in–posiiton width, it is assumed that positioning completes and the next block is exected.
If position error amount does not become within the in–position width, refer to servo alarm 400, 4n0 and 4n1.

e. Feedrate override is at 0%

Actual feedrate is overridden by the override signals to a programmed feedrate. Check the override signals using the PMC's diagnostic function (PMCDGN).

<Normal override signal>

	#7	#6	#5	#4	#3	#2	#1	#0
G0012	*FV7	*FV6	*FV5	*FV4	*FV3	*FV2	*FV1	*FV0

***FVn** :Feedrate override

<2nd override signal (option)>
Feed rate is overridden more finely using the signals below:
See MTB's manual whether this feature is equipped.

	#7	#6	#5	#4	#3	#2	#1	#0
G0013	*AFV7	*AFV6	*AFV5	*AFV4	*AFV3	*AFV2	*AFV1	*AFV0

***AFVn** :2nd feed rate override

<State of override signal>

*FV7·····*FV0	
1 1 1 1 1 1 1 1	0%
1 1 1 1 1 1 1 0	1%
:	:
1 0 0 1 1 0 1 1	100%
:	:
0 0 0 0 0 0 0 1	254%
0 0 0 0 0 0 0 0	0%

*AFV7·····*AFV0	
1 1 1 1 1 1 1 1	0%
1 1 1 1 1 1 1 0	1%
:	:
1 0 0 1 1 0 1 1	100%
:	:
0 0 0 0 0 0 0 1	254%
0 0 0 0 0 0 0 0	0%

f. Interlock signal or start lock signal is input

<T series only>

Start lock signal is input

	#7	#6	#5	#4	#3	#2	#1	#0
G0007							STLK	

#1 (STLK) With this signal being 1, start lock signal is input.

<Common to T series and M series>
There are a plural number of interlock functions. Parameters are set by machine tool builders for which interlock function is used.
Therefore, confirm the following parameters at first:

	#7	#6	#5	#4	#3	#2	#1	#0
3003				DAU	DIT	ITX		ITL

#0 (ITL) 0 : Interlock signal(*IT) is valid.
#2 (ITX) 0 : Interlock signal (*ITn) is valid.
#3 (DIT) 0 : Interlock signal (± MITn) is valid.
#4 (DAU) 1 : Interlock signal (± MITn) is valid in both manual operation and automatic operation.

Confirm which interlock signal is activated by the PMC's diagnostic function (PMCDGN) .

1) Interlock signal (*IT) is input

	#7	#6	#5	#4	#3	#2	#1	#0
G0008								*IT

#0 (*IT) : When this bit is 0, interlock signal is input.

2) Interlock signal per each axis (*ITn) is input

	#7	#6	#5	#4	#3	#2	#1	#0
G0130	*IT8	*IT7	*IT6	*IT5	*IT4	*IT3	*IT2	*IT1

***ITn** When the bit is 0, the corresponding axis's interlock signal is input.

3) Interlock signal per axis and direction(± MITn) is input

· M series

	#7	#6	#5	#4	#3	#2	#1	#0
G0132					+MIT4	+MIT3	+MIT2	+MIT1
G0134					–MIT4	–MIT3	–MIT2	–MIT1

· T series

	#7	#6	#5	#4	#3	#2	#1	#0
X0004			–MIT2	+MIT2	–MIT1	+MIT1		

± MITn=1 shows interlock signal per axis and direction is input.

* For the T series, ± MITn is valid only for manual operation.

4) Controlled axis detach function is running. A detached axis is specified for travelling.

*This function is valid when CNC parameter No.1005#7=1. For whether this function is running or not, confirm the following signal using PMC's diagnostic function (PMCDGN). Check the axis concerned.

	#7	#6	#5	#4	#3	#2	#1	#0
F0110	MDTCH8	MDTCH7	MDTCH6	MDTCH5	MDTCH4	MDTCH3	MDTCH2	MDTCH1

When signal MDTHn is “1”, the axis detach function is in valid.
The control axis detach function becomes valid by the following signal issued from the PMC or a CNC side parameter. Check as in the following procedure :

1) The control axis detach signal (DTCHn) is input.

	#7	#6	#5	#4	#3	#2	#1	#0
G0124	DTCH8	DTCH7	DTCH6	DTCH5	DTCH4	DTCH3	DTCH2	DTCH1

If it is 1, the corresponding axis is detached.

2) The following parameter enables the control axis detach function to the corresponding axis.

	#7	#6	#5	#4	#3	#2	#1	#0
0012	RMVx							

#7(RMVx) 0 : Controlled axis is connected
1 : Controlled axis is detached

g. CNC is waiting for spindle speed arrival signal to be input

Actual spindle speed does not arrive at a speed specified in a program. Confirm the signal state using the PMC’s diagnostic function (PMCDGN).

	#7	#6	#5	#4	#3	#2	#1	#0
G0029				SAR				

#4(SAR) : When this signal is 0, spindle speed does not arrive at the specified speed.

This function is valid when PARAM 3708#0=1.

h. Manual feedrate override is 0% (dry run)

Normally manual feedrate override function is used for jog feed.
But when DRN(dry run) signal turns on during an auomatic operation,override values set with these signals become valid to the following speed set by a parameter.

	#7	#6	#5	#4	#3	#2	#1	#0
G0046	DRN							

#7(DRN) : Dry run signal is input with this signal being 1.

1410	Dry run rate

The rate when the following override value is 100%.

	#7	#6	#5	#4	#3	#2	#1	#0
G0010	*JV7	*JV6	*JV5	*JV4	+JV3	*JV2	*JV1	*JV0
G0011	*JV15	*JV14	*JV13	*JV12	+JV11	*JV10	*JV9	*JV8

When override value is 0%, all bits of the above address is [1111 . . . 1111] or [0000 . . . 0000].

*JV15 . . . . . JV0	Override
1111 1111 1111 1111	0.00%
1111 1111 1111 1110	0.01%
:	:
1101 1000 1110 1111	100.00%
:	:
0000 0000 0000 0001	655.34%
0000 0000 0000 0000	0.00%

i. NC is in a reset state

In this case, the CNC's status display shows RESET. Refer to item 1.

(2) Only rapid traverse in positioning (G00) does not function Confirm the following parameter and signals from the PMC.

(a) Setting value of rapid traverse rate

1420	Rapid traverse rate per axis

(b) Rapid traverse override signals

	#7	#6	#5	#4	#3	#2	#1	#0
G0014							ROV2	ROV1
G0096	HROV	*HROV6	*HROV5	*HROV4	*HROV3	*HROV2	*HROV1	*HROV0

(HROV–0) (HROV=1)

ROV1	ROV2	Override
0	0	100%
1	1	50%
0	1	25%
1	1	Fo

*HROV6 *HROV0	Override
1 1 1 1 1 1 1	0%
1 1 1 1 1 1 0	1%
:	:
0 0 1 1 0 1 1	100%

1421	Rapid traverse override F0 rate

(3) Only feed (other than G00) does not function

(a) Maximum feedrate set by parameter is incorrect.

1422	Maximum feedrate

Feedrate is clamped at this upper feedrate.

(b) Feedrate is specified by feed per revolution (mm/rev)

1) Position coder does not rotate

Check the connection between spindle and position coder The following failure is considered:

- T iming belt is broken
- Key is removed
- Coupling is loose
- Connector of signal cable is loosened

2) Position coder is faulty

(c) Thread cutting does not operate

1) Position coder does not rotate

Check the connection between spindle and position coder
The following failure is considered:

- Timing belt is broken
- Key is removed
- Coupling is loose
- Connector of signal cable is loosened

2) Position coder is faulty

Position coder is connected to the spindle amplifier when serial interface spindle is used or connected to the CNC when analog interface spindle is used.
For details of connection, refer to the following.

<T series>
Whether A/B phase signals from the position coder are read correctly, can be judged also by the spindle speed display on the CRT screen (position screen). (However, it is not displayed when PARAM 3105#2=0).

<α*i* series spindle amplifier>

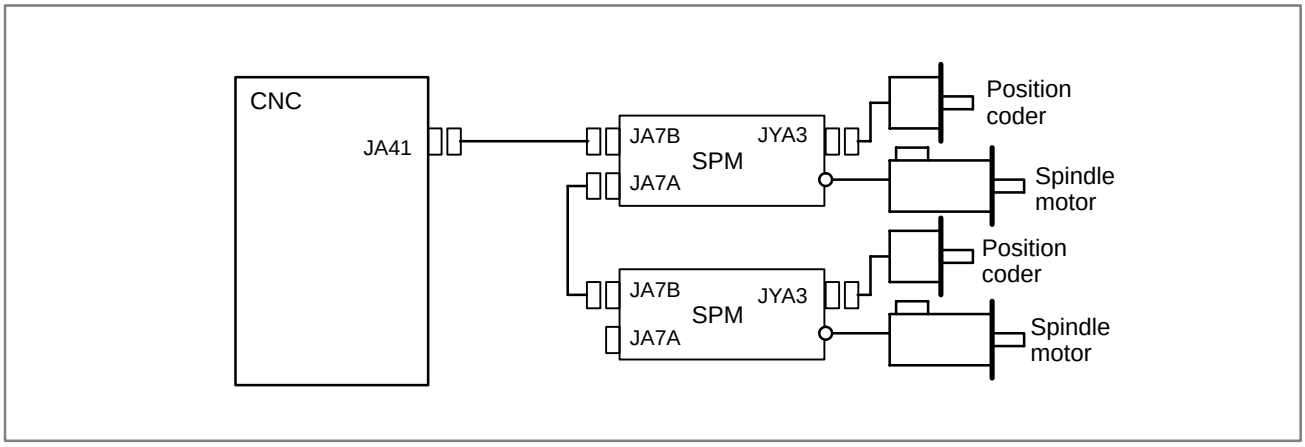

<Analog interface spindle amplifier>

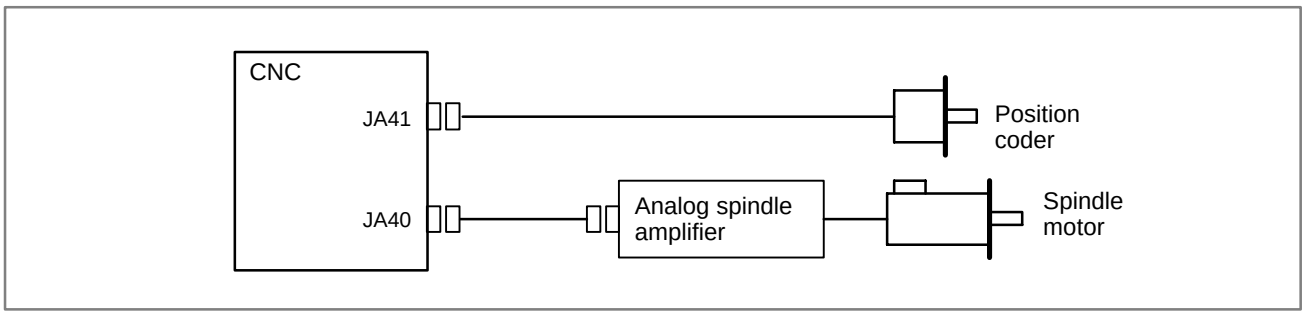

(d) A cutting feed block containing a feedrate command (F command) with a feedrate of 0 is specified.
If FCO (bit 7 of parameter No. 1404) is set to 1, P/S alarm 11 is not issued even if a feedrate command (F command) with a feedrate of 0 is issued.

11.6 CYCLE START LED SIGNAL HAS TURNED OFF

Points

(1) After cycle operation is started, then stopped, check as follows:
(2) Confirm cycle start LED on machine operator's panel.
(3) Confirm CNC's diagnostic function.

Causes and Remedies

The reason why cycle start LED signal (STL) has turned off are displayed on CNC's diagnostic numbers 020 to 025 as follows:

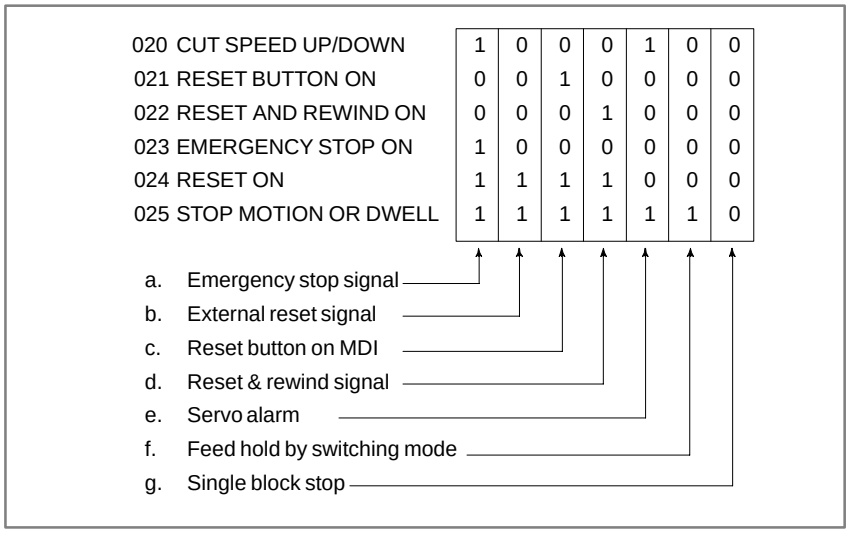

Details of signals a to g are as follows:
Confirm the signals concerned using diagnostic function (PMCDGN).

a. Emergency stop is input

	#7	#6	#5	#4	#3	#2	#1	#0
X1008				*ESP				
	#7	#6	#5	#4	#3	#2	#1	#0
G0008				*ESP				

***ESP=0** : Emergency stop signal is input :

b. External reset signal is input

	#7	#6	#5	#4	#3	#2	#1	#0
G0008	ERS							

#7(ERS) : When the bit is 1, external reset signal is input.

This signal is usually used for a confirmation signal of M02 when an M02 is specified in a program as the end of a program.
Therefore, when M02 is executed, this signal is input.

c. Reset button on the MDI is pressed

An automatic operation is put into a reset status when RESET key on the MDI panel is pressed.

d. Reset & rewind signal is input

	#7	#6	#5	#4	#3	#2	#1	#0
G0008		RRW						

#6(RRW) : When this signal is 1, the reset & rewind signal is input.

This signal is usually used for a confirmation signal of M30 when an M30 is specified in a program as the end of a program.
Therefore, when M30 is executed, this signal is input.

e. Servo alarm has generated

When any servo alarm has generated, cycle operation is put into the reset state and operation stop.

f. Cycle operation is in a feed hold state

The cycle operation becomes feed hold state in the following cases:

1) Modes are switched from an automatic operation mode to a manual operation mode.
2) Feed hold signal is input.

<Mode select signal>

	#7	#6	#5	#4	#3	#2	#1	#0
G0043						MD4	MD2	MD1

Automatic operation	memory edit(EDIT)	0	1	1
	Automatic operation (AUTO)	0	0	1
	Manual data input (MDI)	0	0	0
Manual operation	Jog feed (JOG)	1	0	0
	Handle/step	1	0	1
	TEACH IN HANDLE	1	1	1
	TEACH IN JOG	1	1	0

<Feed hold signal>

	#7	#6	#5	#4	#3	#2	#1	#0
G0008			*SP					

#5(*SP) : When this signal is 0, the feed hold signal is input.

g. It become single block stop during automatic operation

	#7	#6	#5	#4	#3	#2	#1	#0
G0046							SBK	

#1(SBK) When this signal is 1, the single block signal is input.

11.7 NOTHING IS DISPLAYED ON THE LCD WHEN THE POWER IS TURNED ON

Causes and actions

If nothing is displayed on the LCD at power–up or if the LCD is locked with “GRAPHIC IS READY.” or the slot status screen displayed, the probable causes include the following:

- **For the LCD–mounted type**
  - The LCD cable or backlight cable is not connected.
  - The necessary software is not installed.
  - The motherboard, display control card, CPU card, or inverter board is defective.
- **For the stand–alone type**
  - The LCD unit is not connected to the power supply.
  - The LCD cable or backlight cable is not connected.
  - The LCD unit is not connected to the CNC with the optical cable or the cable is broken.
  - The necessary software is not installed.
  - The main CPU board, display control card, or LCD unit is defective.

If “GRAPHIC IS READY.BOOT START”. is displayed, this indicates that the display control circuit has started up normally but that the CNC has not started up.

[For the LCD–mounted type]

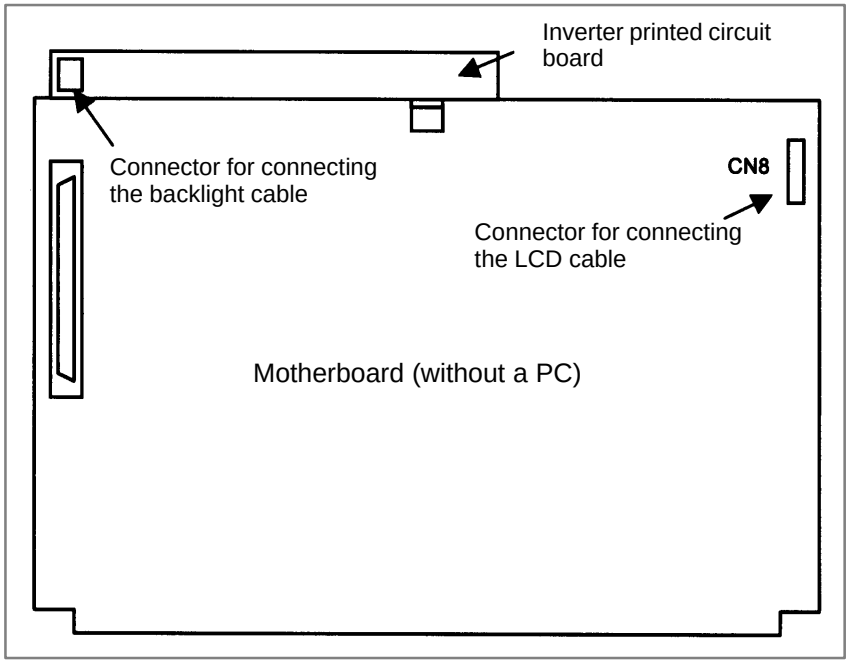

- **LCD display**

Referring to the hardware chapter, check the LCD on/off status of the motherboard.
If the motherboard has started up normally and the LCD display indicates normal operation, a probable cause is a fault of the display system, such as a cable not connected or a defective inverter board.
If the LCD display is locked in the middle of the startup process, the probable causes include defective hardware (or installation failure) and the necessary software not installed.

- **Connection of the LCD and backlight cables**

Check that the LCD and backlight cables are connected firmly to the corresponding connectors.
These cables are connected before shipment from FANUC. This check is, however, required because the cables may be disconnected during maintenance.

- **The necessary software is not installed**

If necessary software is not stored in the FROM module, the CNC may not start up.

- **Defective printed circuit board**

If the motherboard or display control card is defective or is not correctly installed, the CNC may not start up.
Check that the card PCBs are engaged firmly with the connectors on the motherboard.
If any of the above actions does not solve the problem, replace the display control card, CPU card, and motherboard.

- **Installation positions of the display control card, and CPU card**

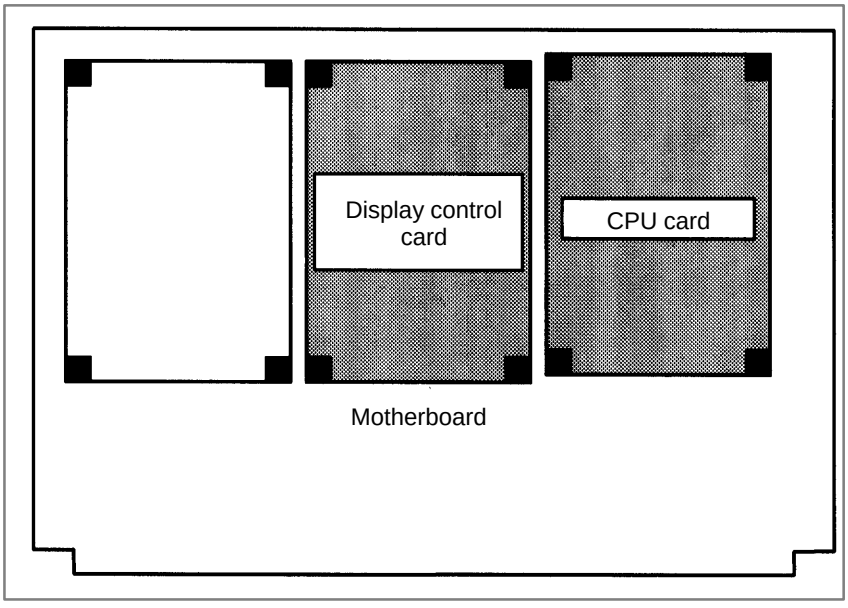

[For the stand–alone type]

- **Power supply of the LCD unit**

Check that the power cable is connected to the connector CP1A of the LCD unit.

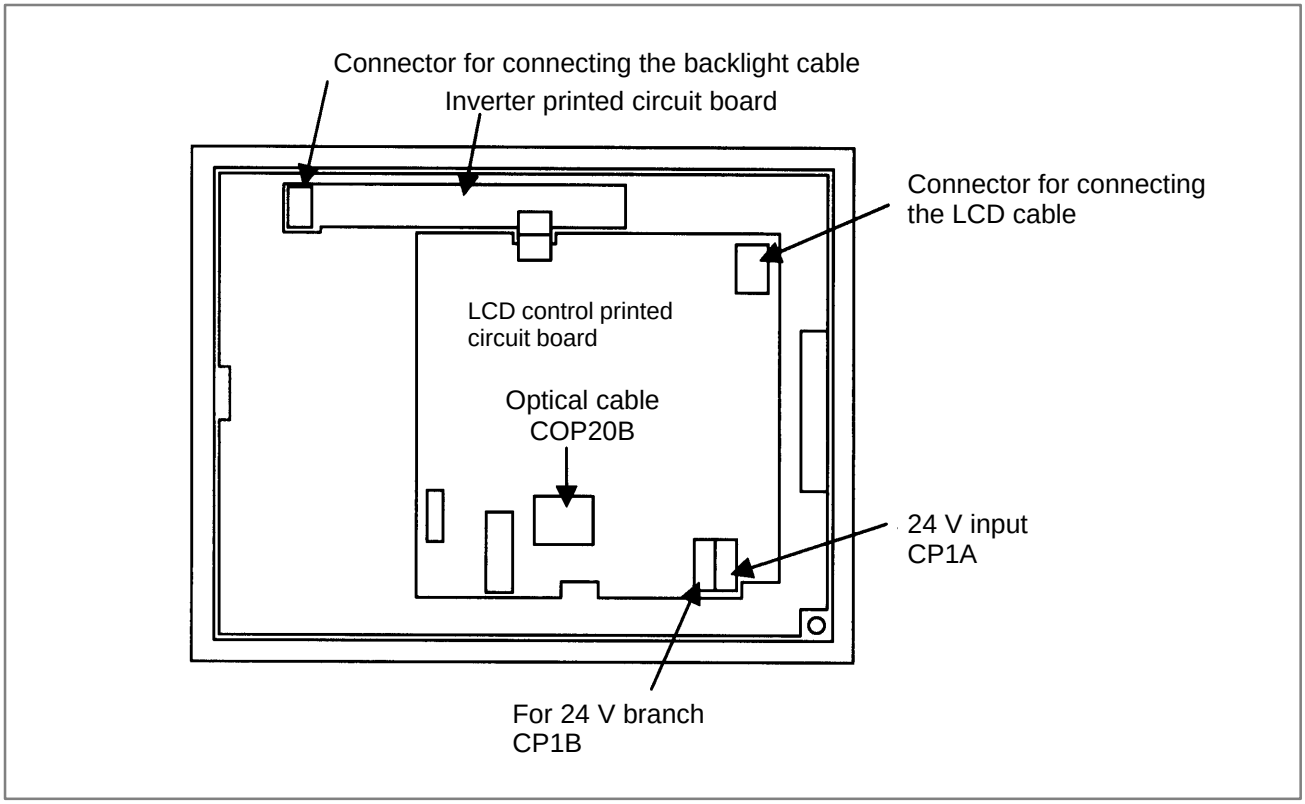

- **LED display**

Referring to the hardware chapter, check the LED on/off status of the main CPU board.
If the main CPU board has started up normally and the LED display indicates normal operation, a probable cause is a fault of the display system, such as the cable of the LCD unit not connected or a defective inverter board.
If the LED display is locked in the middle of the startup process, the probable causes include defective hardware (or installation failure) and the necessary software not installed.

- **Optical cable**

Check that the optical cable is free from excessive force and that it is not excessively bent. Check that the optical cable is connected firmly.
If no problems are found with the connection of the optical cable, replace the optical cable.

- **Connection on the LCD unit**

Check that the backlight and LCD cables are connected firmly to the corresponding connectors.
These cables are connected before shipment from FANUC. This check is, however, required because the cables may be disconnected during maintenance.

- **Display control card**

Check that the display control card installed on the main CPU board is engaged with the connector. If it is engaged properly, replace this card.

- **LCD unit**

Replace the LCD unit or the control printed circuit board located at the rear of the LCD unit

- **Main CPU board**

If any of the above actions does not solve the problem, replace the main CPU board and the CPU card.

- **Installation positions of the display control card and the CPU card**

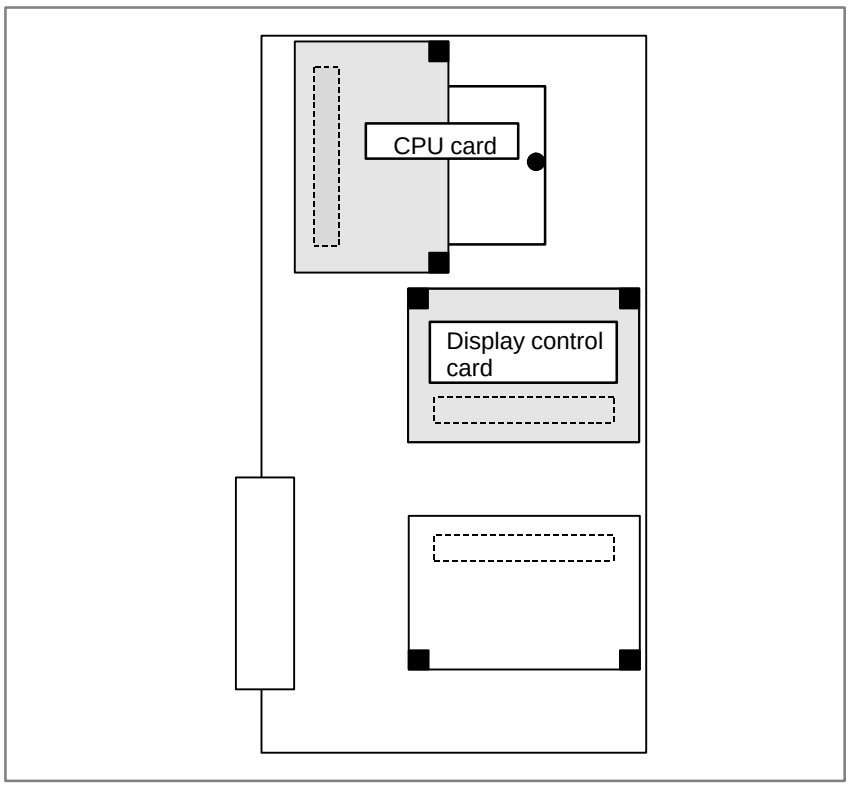

11.8 THE DISPLAY ON THE LCD UNIT FLASHES

Causes and actions

This situation can occur only with the stand–alone type.
If a break is detected in the optical cable (HSSB) that connects the LCD unit to the main CPU board, the display on the LCD unit flashes.
The same situation occurs if the main CPU board is turned off while the power is on.

- **Power supply of the main CPU board**

  The display on the LCD unit flashes if the main CPU board is turned off, with the LCD kept on, while the power is on.

- **Break of the optical cable**

  Check that the optical cable is free from excessive force and that it is not excessively bent.
  If no problems are found with the connection of the cable, replace the optical cable.

- **Display control card**

  Replace the display control card installed on the main CPU board.

- **LCD unit**

  Replace the LCD unit or the control printed circuit board located at the rear of the LCD unit

- **Installation position of the display control card**

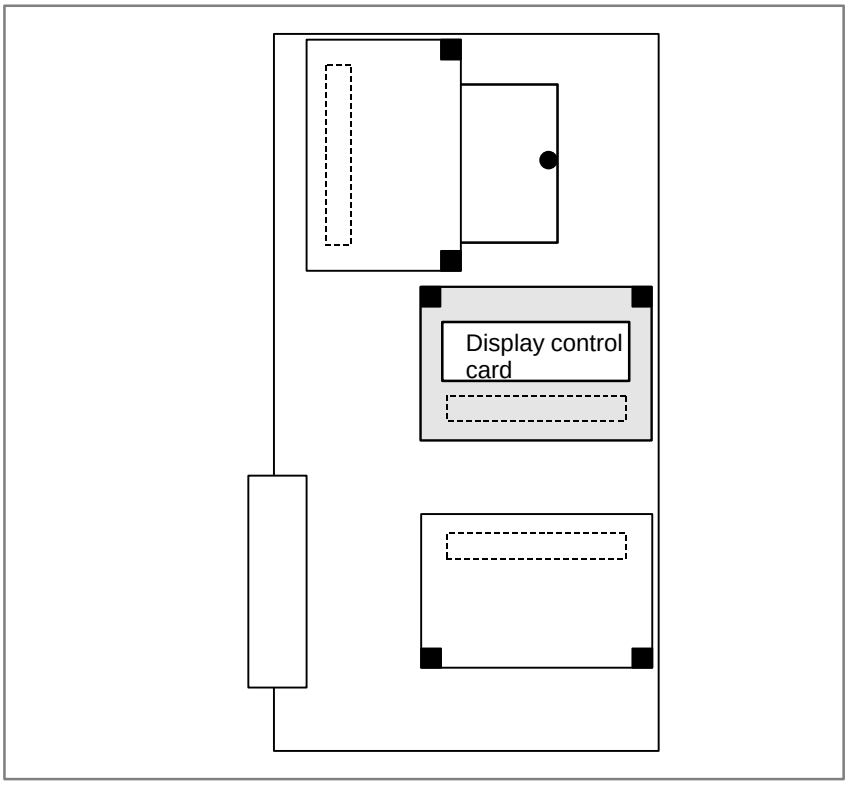

11.9 INPUT FROM AND OUTPUT TO I/O DEVICES CANNOT BE PERFORMED INPUT/ OUTPUT CANNOT BE PERFORMED PROPERLY

Causes and actions

If the I/O Link is not established, if the signals from an I/O device cannot be input normally to the CNC, or if the signals from the CNC cannot be output to an I/O device, the probable causes include the following:

- The I/O device is not turned on, or the power supply is not at the appropriate voltage.
- The I/O Link cable is not connected correctly or appropriately.
- The input/output signals are not connected correctly.
- I/O Link allocation is not performed, or is not performed properly.

- **PMC alarm NO I/O DEVICE**

If "NO I/O DEVICE" is displayed on the alarm screen of the PMC, no I/O devices are recognized.

- **IOCHK screen of the PMC**

By selecting [PMCDGN], [IOCHK], and [IOLNK] in this order from the PMC screen, the I/O devices recognized by the CNC are displayed. From this screen, the devices that are connected normally can be determined.

Screen display example

GROUP	ID	KIND OF UNIT00
00	A9	I/O MODULE01
01	A8	OTHER UNIT

This example indicates that the I/O Link is as shown in the figure below.

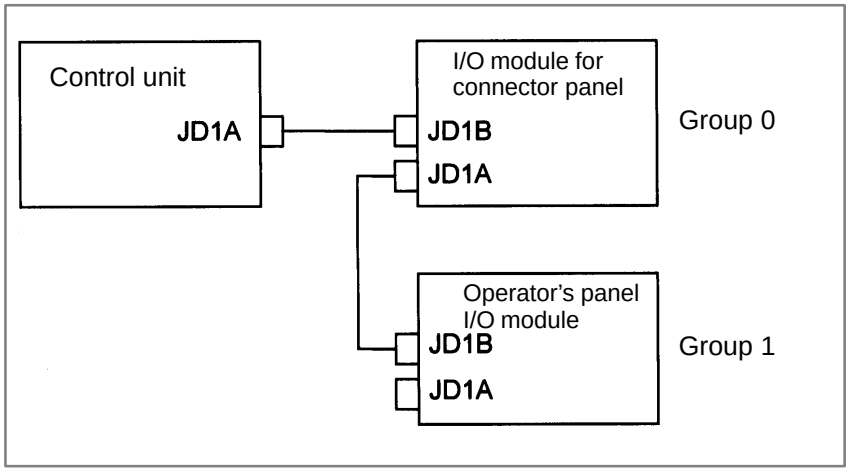

- **Checking the power supplies of the I/O devices**

Check that the connected I/O devices are connected properly to the power supplies and that the voltages are as prescribed.
Check that the power–on sequence is correct.

Time at which an I/O device is to be turned on
Before the CNC is turned on or within 500 ms after the CNC is turned on

When the CNC is turned off, the I/O devices must also be turned off. (Otherwise, the I/O Link may not be established the next time the CNC is turned on.)

- **Connection of cables**

As in the example shown on the previous page, I/O Link cables are used to connect JD1As and JD1Bs.
JD1A represents an upper unit while JD1B represents a lower unit.
Check that the cables are connected correctly.

- **Connection of I/O signals**

Check that the input/output signals to be connected to each I/O device are connected correctly.
For operator's panel I/O modules and for connector panel I/O modules, also check that the 0 V or +24 V input signal is connected to the common pin and that the +24 V output signal is connected to the DO common pin.

- **I/O Link allocation**

Check that I/O Link allocation has been performed correctly.
Selecting [EDIT] and then [MODULE] from the PMC screen causes the allocation edit screen to be displayed.
After editing allocation, write the changes to the FROM on the [I/O] screen. Otherwise, the changes will be lost when the power is turned off.
The checking of allocation requires a Ladder editing card.

11.10 IN A CONNECTOR PANEL I/O UNIT, DATA IS INPUT TO AN UNEXPECTED ADDRESS

If data is input to an invalid address in a connector panel I/O unit (for example, data that should be input to X004 is actually input to X010 in a connector panel I/O unit), the most likely causes are as follows:

(1) The I/O Link allocation is wrong.

→ Perform the check described in Section 11.4.

(2) The unit–to–unit cables (CA52–to–CA53) are not connected correctly.
If the connection is wrong, expansion unit 1 is allocated the address of expansion unit 3, as shown below.

→ Connect the unit–to–unit cables as shown below:

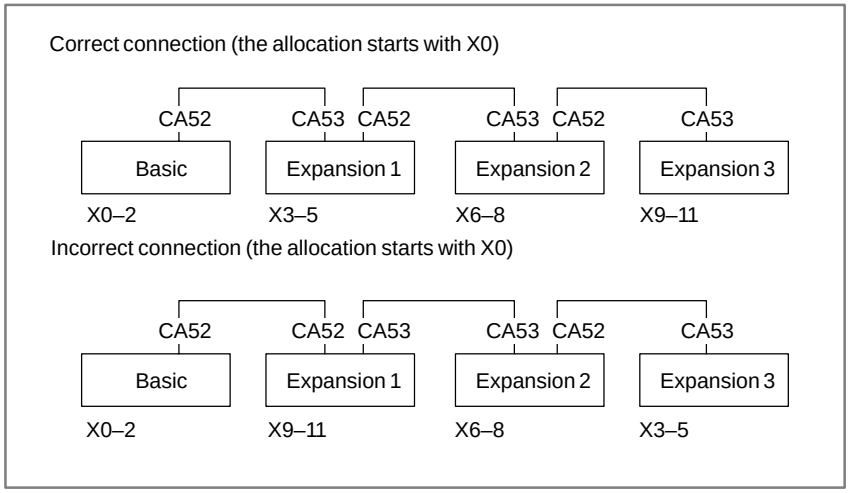

(3) The setting of the rotary switch on an expansion unit is wrong
If the rotary switch is set to 1, one unit number is skipped. If set to 2, two unit numbers are skipped. Usually, the setting must be 0. (For those units without a rotary switch, unit numbers cannot be skipped.)

→ See the following example and refer to the “FANUC Series 16*i*/18*i*/21*i*–B Connection Manual (Hardware)” (B–63523EN).

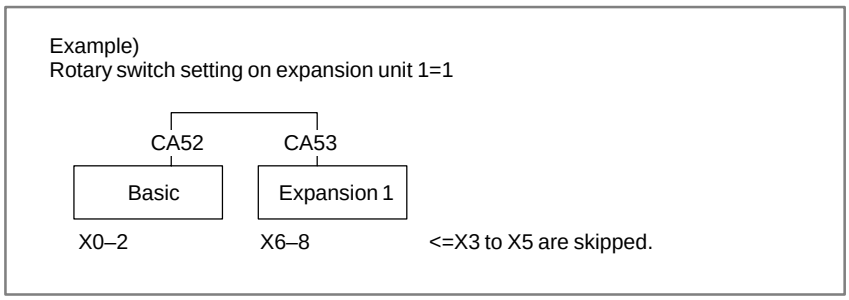

11.11 IN A CONNECTOR PANEL I/O UNIT, NO DATA IS OUTPUT TO AN EXPANSION UNIT

The most likely cause is that power is not being supplied to the expansion unit.

→ Check whether 24–V power is supplied to 18P and 50P of the expansion unit, DI and DO signals are not input and output.

→ Check whether 24–V power is supplied to 1P and 3P of the expansion unit, when DI signals are input and DO signals are not output.

11.12 ALARM 85 TO 87 (READER/PUNCHER INTERFACE ALARM)

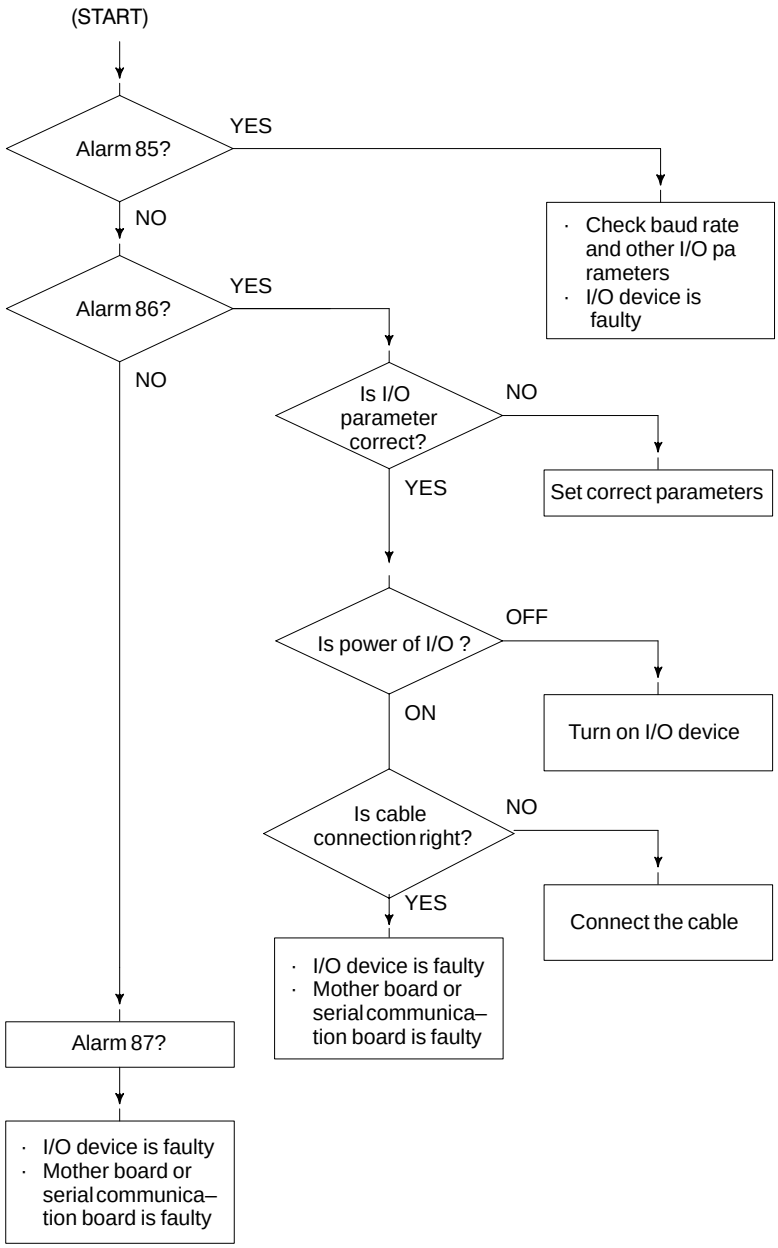

Causes

(a) Parameters on reader/puncher interface are not correct.
Check the following setting data and parameters.
(b) External I/O device or host computer is faulty.
(c) Mother board or serial communication board is faulty.
(d) Cable between NC and I/O device is faulty.

Countermeasures

(a) Parameters on reader/puncher interface are not correct.
Check the following setting data and parameters:
<Setting>
PUNCH CODE=0 OR 1 (0: EIA,1:ISO)
Select ISO or EIA according to the type of I/O device.
If punch code does not match, alarm 86 will generate.

<Parameter>

Value of parameter 0020 / Function		0	1	2	3	
Feed		0101#7	0111#7	0121#7	0131#7	
Data input code		0101#3	0111#3	0121#3	0131#3	
Stop bit		0101#0	0111#0	0121#0	0131#0	
Type of I/O device		102	112	122	132	
Baud rate		103	113	123	133	
Communication method	0135#3	–	–	–	0	1
		RS–232C				RS–422
Connector		MOTHER BOARD			SERIAL COMMUNICATION BOARD	
		JD36A		JD36B	JD28A	JD6A

NOTE
1 Numbers in the table indicate parameters and bit numbers.
Example) 101#7: bit7 of parameter 101.
2 For data communications by RS–422, refer to parameters 134 and 135.

	#7	#6	#5	#4	#3	#2	#1	#0
0101	NFD				ASI			SB2
0111								
0121								
0131								

#7(NFD) 0 : Feed is output before and after data in data output (FANUC PPR)
1 : Feed is not output (standard).

#3(ASI) 0 : Data input code is EIA or ISO (automatic recognition)
1 : Data input code is ASCII.

#0(SB2) 0 : No. of stop bits is 1.
1 : No. of stop bits is 2.

0102 0112 0122 0132	Type of I/O device

Value	TYPE OF I/O DEVICE
0	RS–232–C (if the following units are not used)
1	FANUC CASSETTE B1/B2 (bubble cassette)
2	FANUC CASSETTE F1 (Old type FLOPPY CASSETTE ADAPTOR)
3	FANUC PROGRAM FILE Mate, FANUC FA CARD ADAPTOR FANUC FLOPPY CASSETTE ADAPTOR, FANUC SYSTEM P–MODEL H, FANUC Handy File
4	Not used
5	Portable tape reader
6	FANUC PPR, FANUC SYSTEM P–MODEL G, FANUC SYSTEM P–MODEL H

0103 0113 0123 0133	Baud rete

Value	Baud rate
7	600
8	1200
9	2400
10	4800
11	9600
12	19200

When bit#3 of parameter no. 0135=1 (RS–422 interface), the following setting is also available.

Value	Baud rate
13	38400
14	76800
15	86400

Check the following parameters also, when parameter no.0020 is 3.

	#7	#6	#5	#4	#3	#2	#1	#0
0134			CLK	NCD		SYN	PRY	

#5(CLK) 0 : Internal clock is used for baud rate clock of RS–422 interface.
1 : External clock is used for baud rate clock of RS–422 interface.

#4(NCD) 0 : CD (signal quality detection) of RS–232C interface is checked.
1 : CD (signal quality detection) of RS–232C interface is not checked.

#2(SYN) 0 : In protocol B, NC reset/alarm is not informed to the host.
1 : In protocol B, NC reset/alarm is informed to the host by SYN and NAK code.

#1(PRY) 0 : No parity bit
1 : With parity bit

	#7	#6	#5	#4	#3	#2	#1	#0
0135	RMS				R42	PRA	ETX	ASC

#7(RMS) In protocol A, status of remote / tape operation of SAT command is

0 : Always transmitted by 0.

1 : Transmitted by the contents of remote / tape switching request issued by SET command from the CNC.

#3(R42) 0 : Interface is of RS–232C.

1 : Interface is of RS–422.

#2(PRA) 0 : Communication protocol is protocol B

1 : Communication protocol is protocol A

#1(ETX) 0 : End code of protocol A or extended protocol A is CR of ASCII/ISO.

1 : End code of protocol A or extended protocol A is ETX of ASCII/ISO.

#0(ASC) 0 : All the communication codes except for NC data is ISO code.

1 : All the communication codes except for NC data is ASCII code.

(b) External I/O device or Host computer is in trouble

(i) Check whether the setting on communication of external I/O device or host computer is the same as that of the CNC. (baud rate, stop bits,etc.) If they are not the same, change the setting.

(ii) When spare I/O device presents, check whether it is possible to realize communication using the spare I/O device.

(c) Spindle module or communication control module is faulty

(i) When parameter no.0020 is 0 or 1 or 2 (JD36A,JD36B of Main CPU board) Replace the module since spindle module may be faulty.

(ii) When parameter no. 0020 is 3 (JD28A,JD6A of option 1 board) Because communication control module (5) may be faulty, replace the module.

(d) Cable between NC and I/O device is faulty.

Check the cable for disconnection or wrong connection.

<Connection>

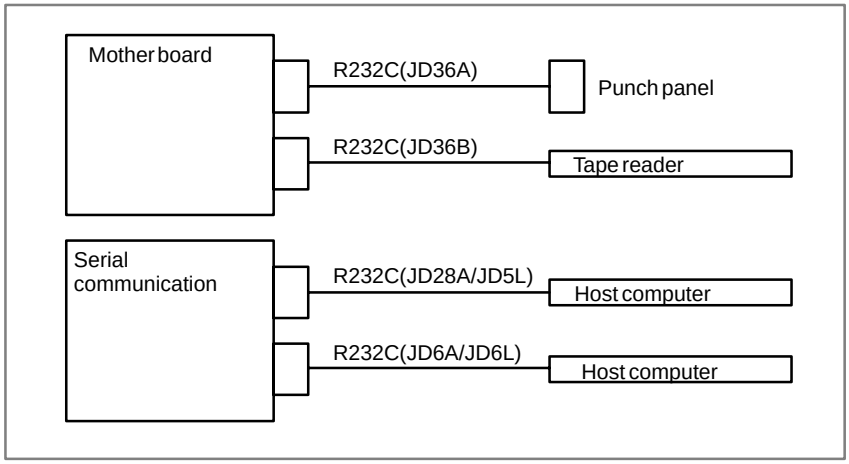

< Cable connection>

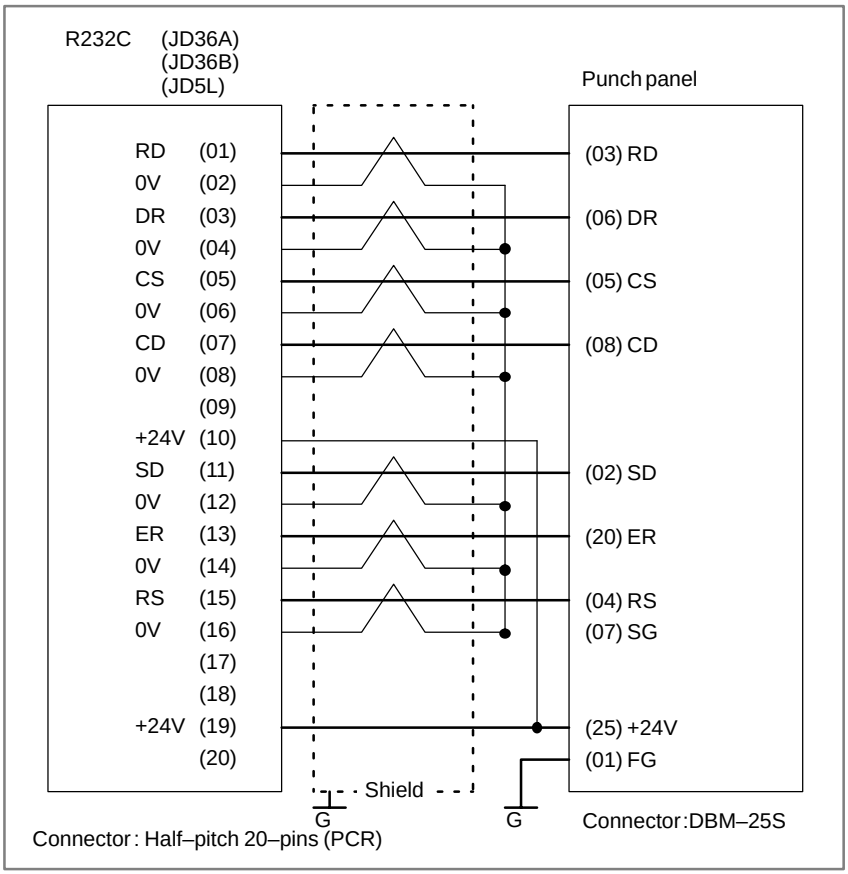

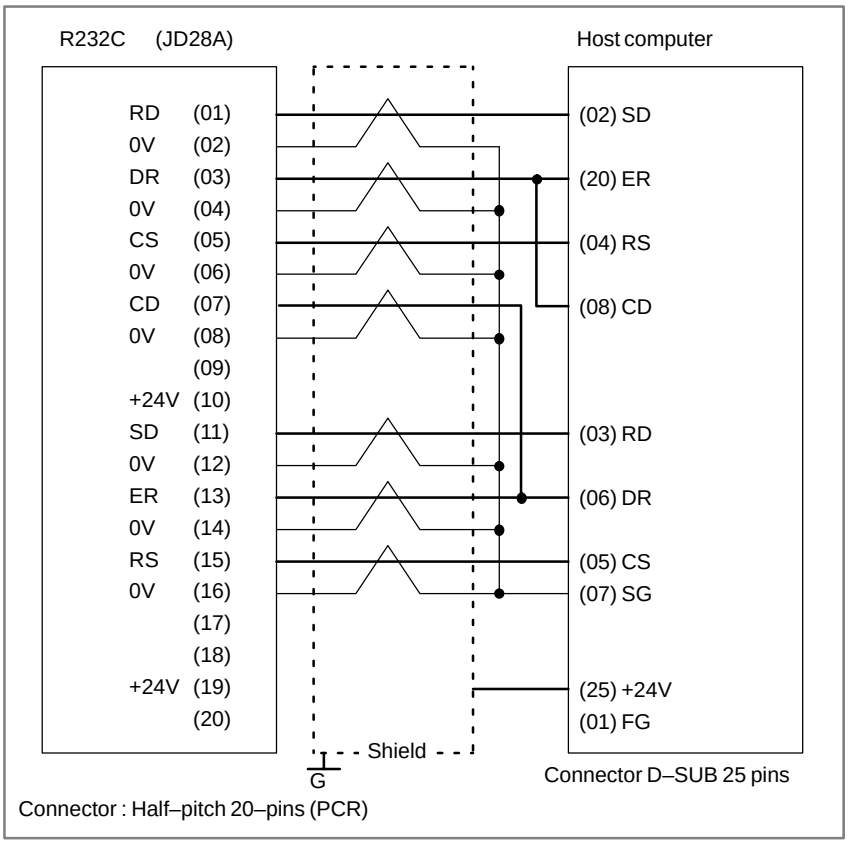

CAUTION
1 When CS is not used, connect it to RS.
2 For protocol A or extended protocol A: When DR is not used, connect it to ER. Always connect CD to ER.

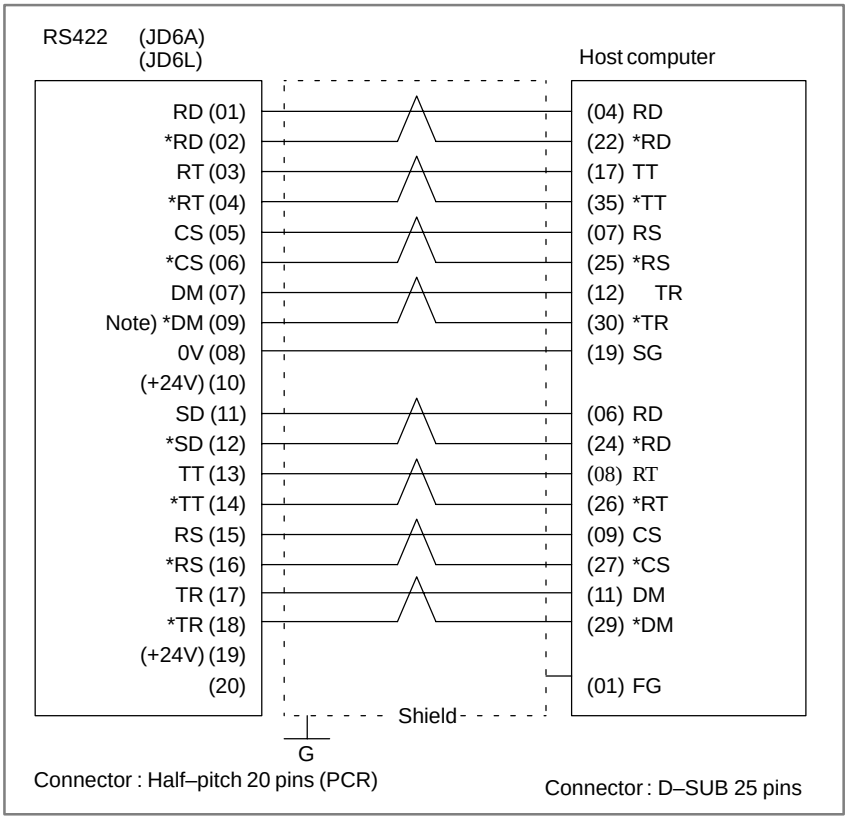

CAUTION
Always use a twisted pair cable.

11.13 ALARM 90 (REFERENCE POSITION RETURN IS ABNORMAL)

Contents

Reference position return was executed when the following condition is not satisfied:
The CNC received one rotation signal at least one time when the axis is moving to the reference position at a speed higher than a speed equivalent to 128 pulses of position error amount(DGN300).

Countermeasures

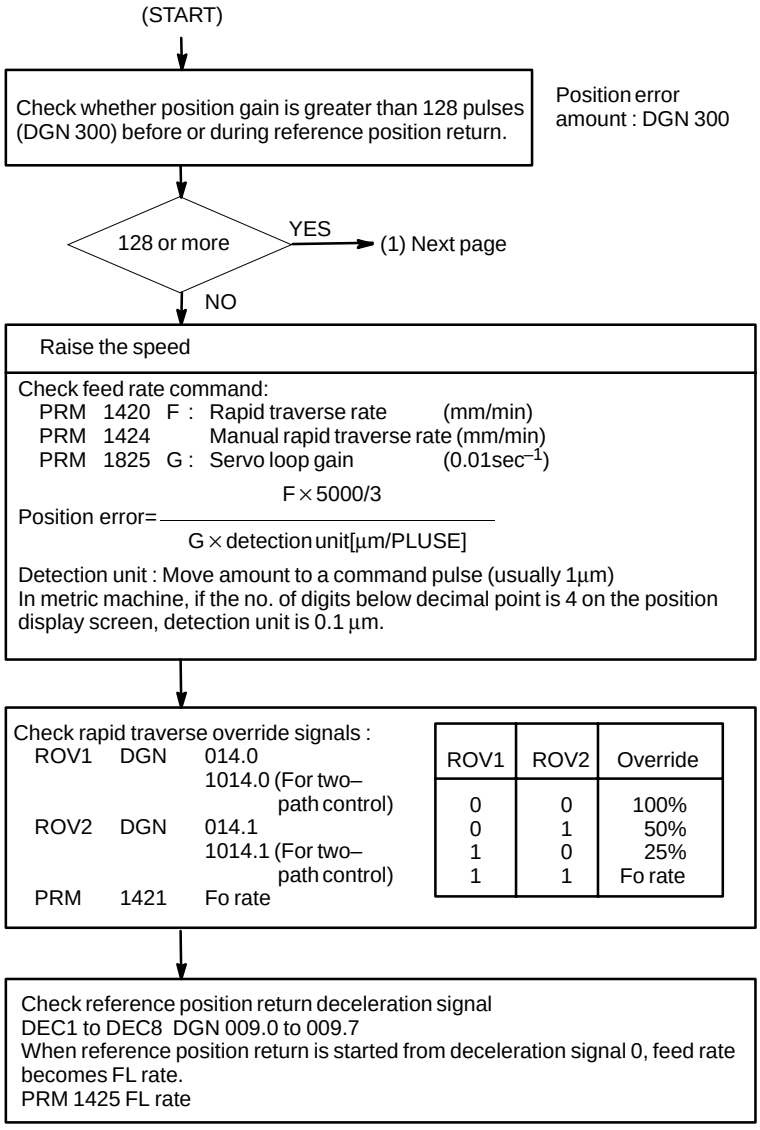

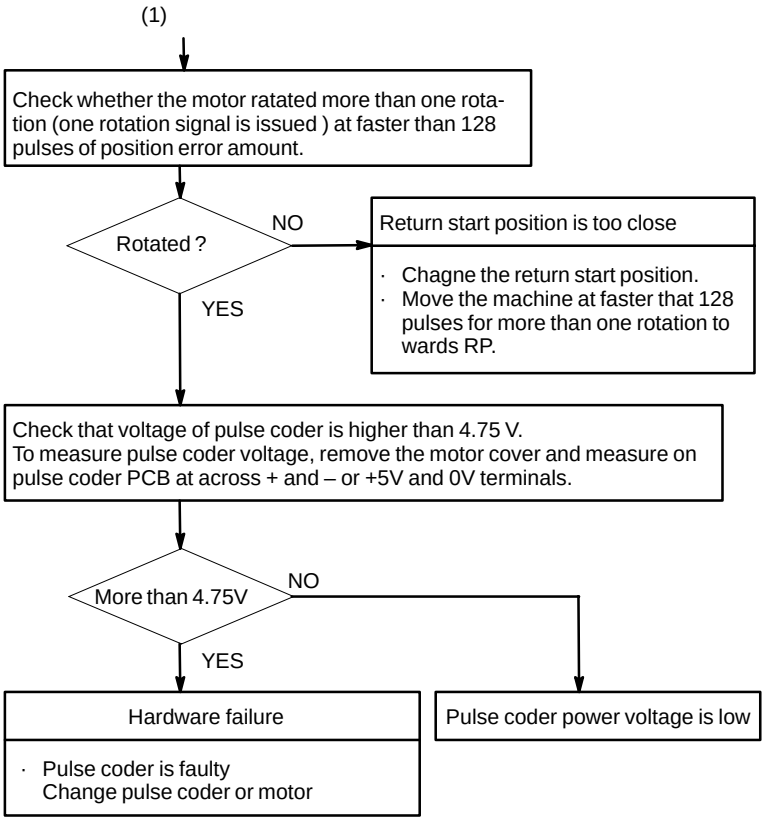

CAUTION

After the pulse coder or motor is exchanged, reference position or machine's standard point may be different from former one. Please set it correctly.

- **Reference**

A speed more than 128 pulses is required because if speed is lower that this, one–rotation signal does not function stably, causing improper position detection.
If bit 0 of parameter No. 2000 is set to 1, a speed corresponding to a positional deviation of 1280 pulses or more is required.
Parameter No. 1836 can be set to 128 or less, as the minimum positional deviation with which reference position return is possible. (If the parameter is set to 0, 128 is assumed as the minimum positional deviation. If bit 0 of parameter No. 2000 is set to 1, a value equal to ten times the set value is used for checking.)

11.14 ALARM 300 (REQUEST FOR REFERENCE POSITION RETURN)

Absolute position data in the serial pulse coder was lost.
(This alarm will be generated when serial pulse coder is exchanged or position feedback signal cable of the serial pulse coder is disconnected).

Remedies

Machine position must be memorized using the following method:

- **When reference position return function is present**

  (1) Execute manual reference position return only for an axis for which this alarm was generated.When manual reference position return cannot be executed because of an another alarm, set parameter 1815#5 to 0 and release the alarm and perform manual operation.

  (2) Press RESET key at the end of reference position return to release the alarm.

- **When reference position return function is not present**

  Execute dogless reference position setting to memorize the reference position.

- **When serial pulse coder is changed**

  Since the reference position is different from the former one, change the grid shift value (PRM 1850) to correct the position.

Related parameters

	#7	#6	#5	#4	#3	#2	#1	#0
1815			APC x	APZx				

#5(APCx) 0 : Position detector is incremental pulse coder.
1 : Position detector is absolute pulse coder.

#4(APZx) Reference position of absolute pulse coder is :
0 : not established
1 : established

11.15 ALARM 401 (V READY OFF)

Causes and actions

This alarm is issued if the servo ready signal (VRDY) of a servo amplifier does not turn on or if the signal turns off during operation.
There are cases in which this alarm is issued because another servo alarm is issued. If this occurs, first take the action for the first alarm.
Check the power magnetic circuit around the amplifier. The servo amplifier or the axis control cards on the CNC may be defective.

- **VRDY**

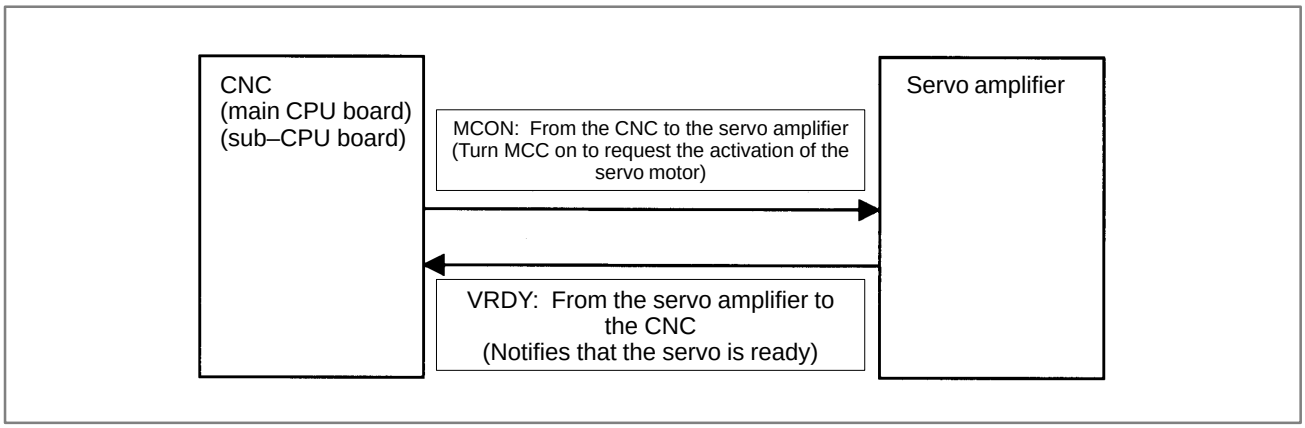

The exchange of this information is performed via the FSSB (optical cable).

- **Example of connection around the amplifier (Typical example)**

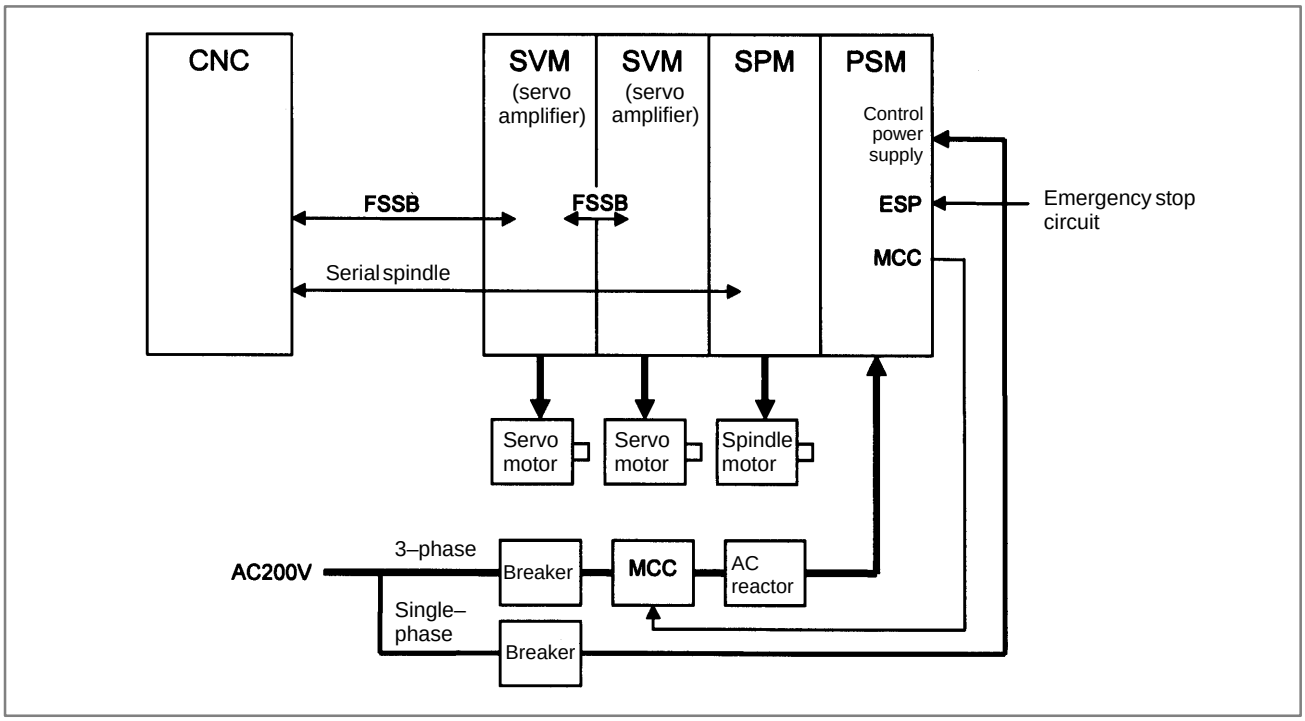

Check items

- Is the PSM control power supply on?
- Has an emergency stop been canceled?
- Is a terminating connector connected to the JX1B connector of the terminating amplifier?
- Is MCC on? If there is an external MCC sequence in addition to the MCC contact of the PSM, check that sequence also.
- Is the power for driving MCC supplied?
- Is the breaker on?
- Has some alarm been issued in the PSM or SPM?

- **Replacing the servo amplifier**

If no problem is found in the power magnetic circuit around the amplifier, replace the servo amplifier.

- **Replacing the axis control cards**

If the above action does not solve the problem, replace the axis control cards.

- **Installation positions of the axis control cards**

[For the LCD–mounted type]

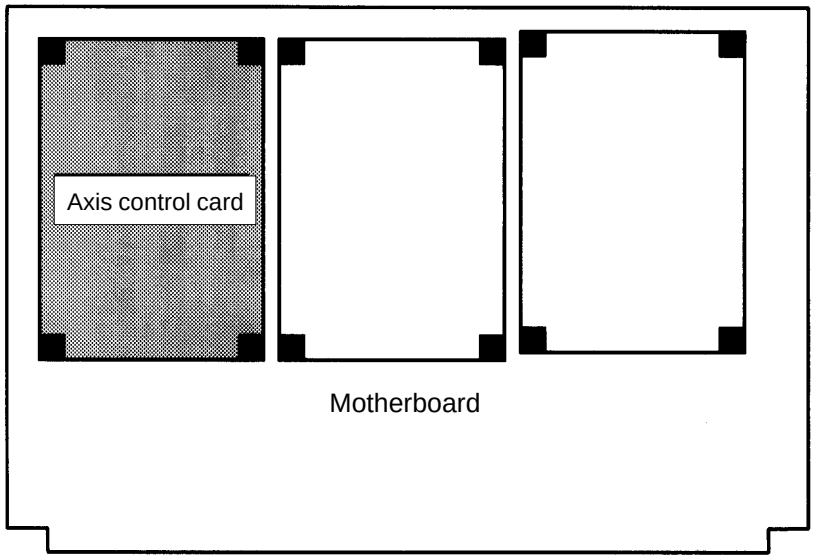

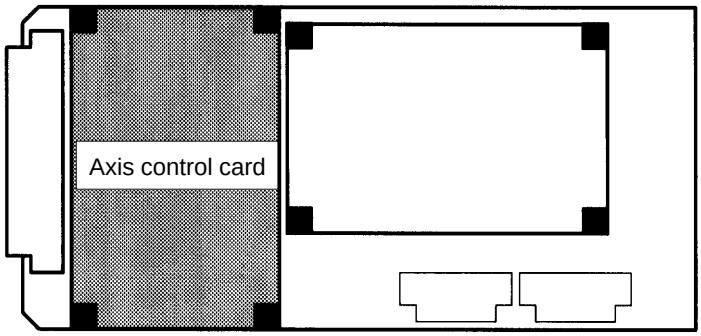

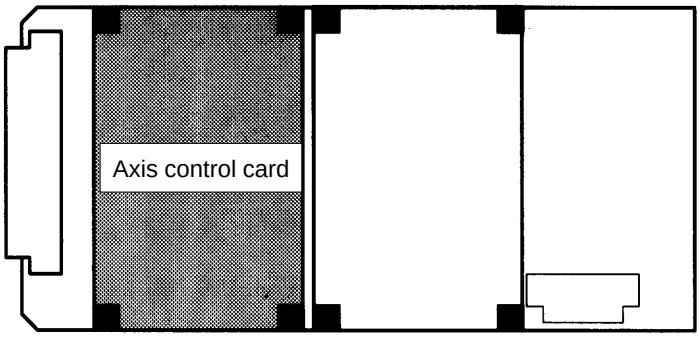

[For the stand–alone type]

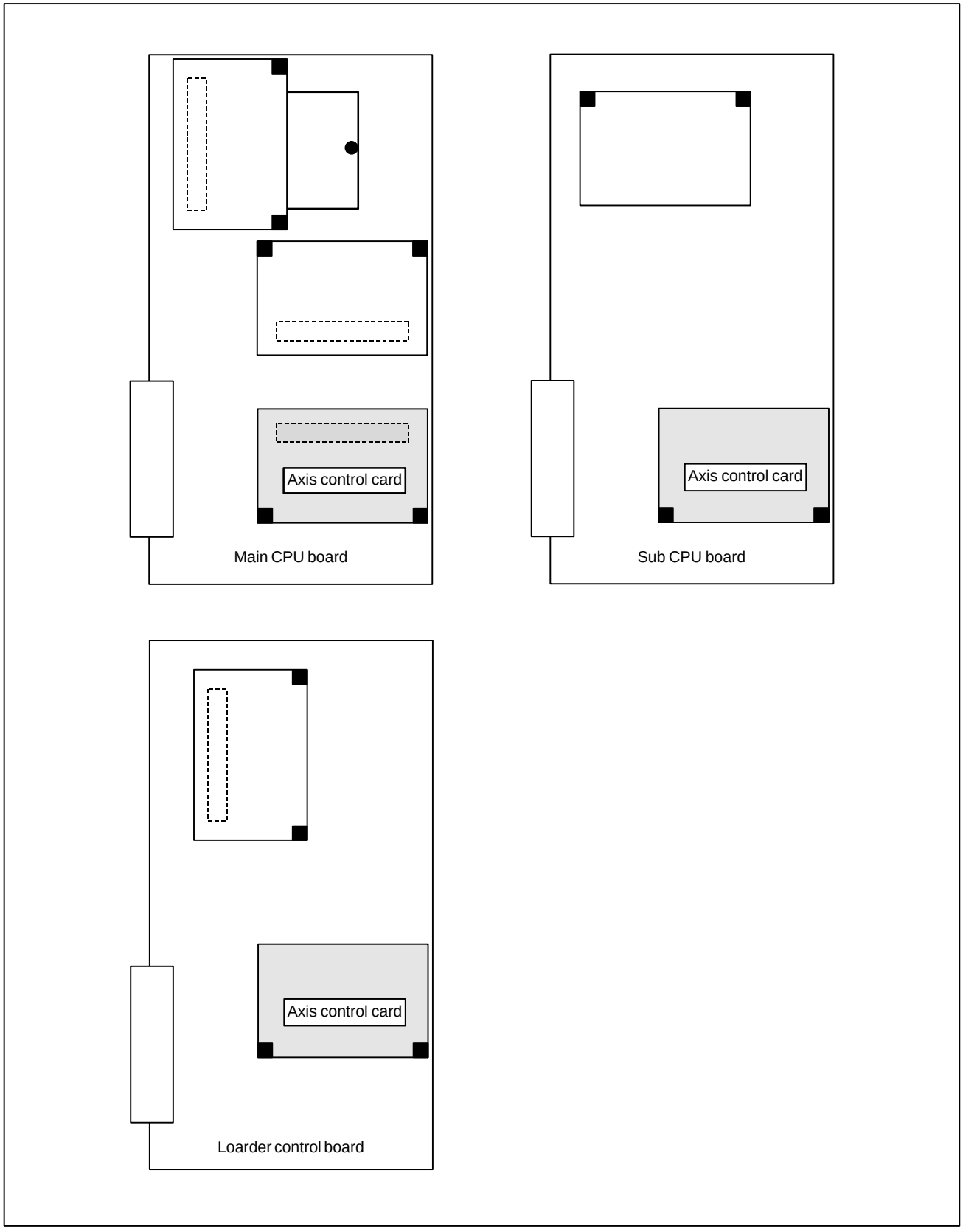

11.16 ALARM 404 (V READY ON)

Causes and actions

This alarm is issued if the servo ready signal (VRDY) of a servo amplifier remains on.
The servo amplifier or the axis control cards on the CNC may be defective.

- **VRDY**

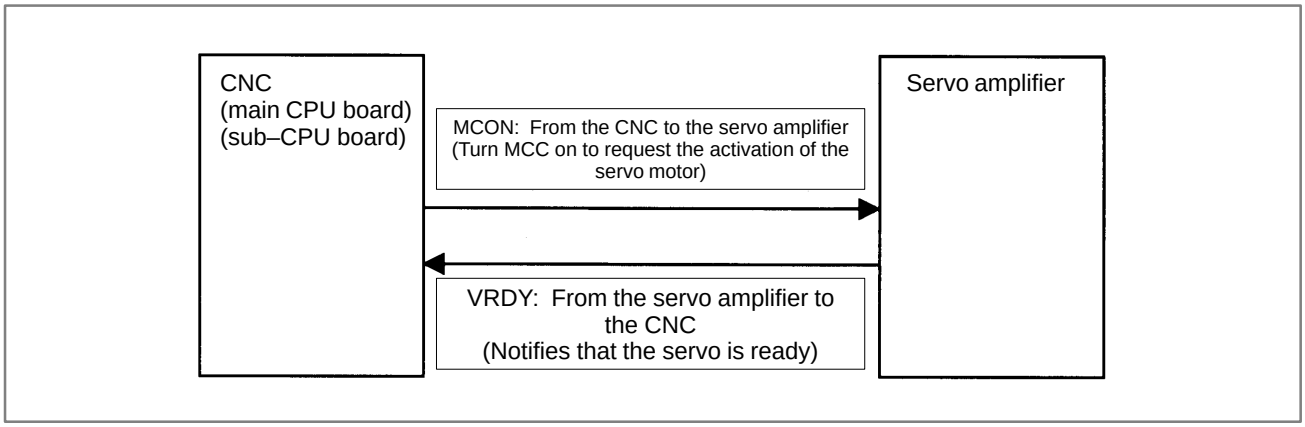

The exchange of this information is performed via the FSSB (optical cable).
This alarm is issued if VRDY remains on when the CNC turns MCON off or if VRDY turns on before the CNC turns MCON on.

- **Replacing the servo amplifier**

The servo amplifier may be defective. Replace the servo amplifier.

- **Replacing the axis control cards**

If replacing the servo amplifier does not solve the problem, replace the axis control cards.

- **Installation positions of the axis control cards**

[For the LCD–mounted type]

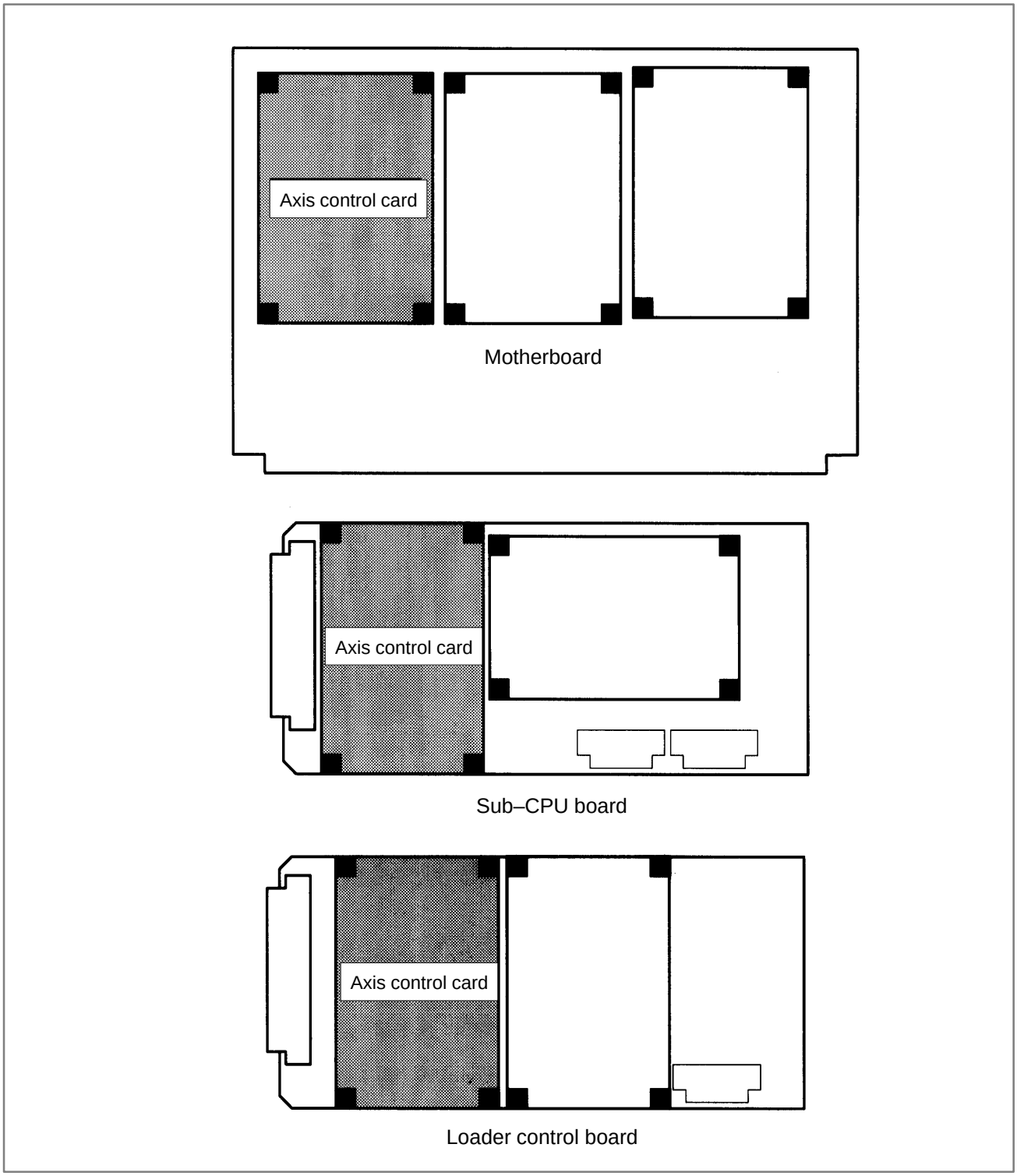

[For the stand–alone type]

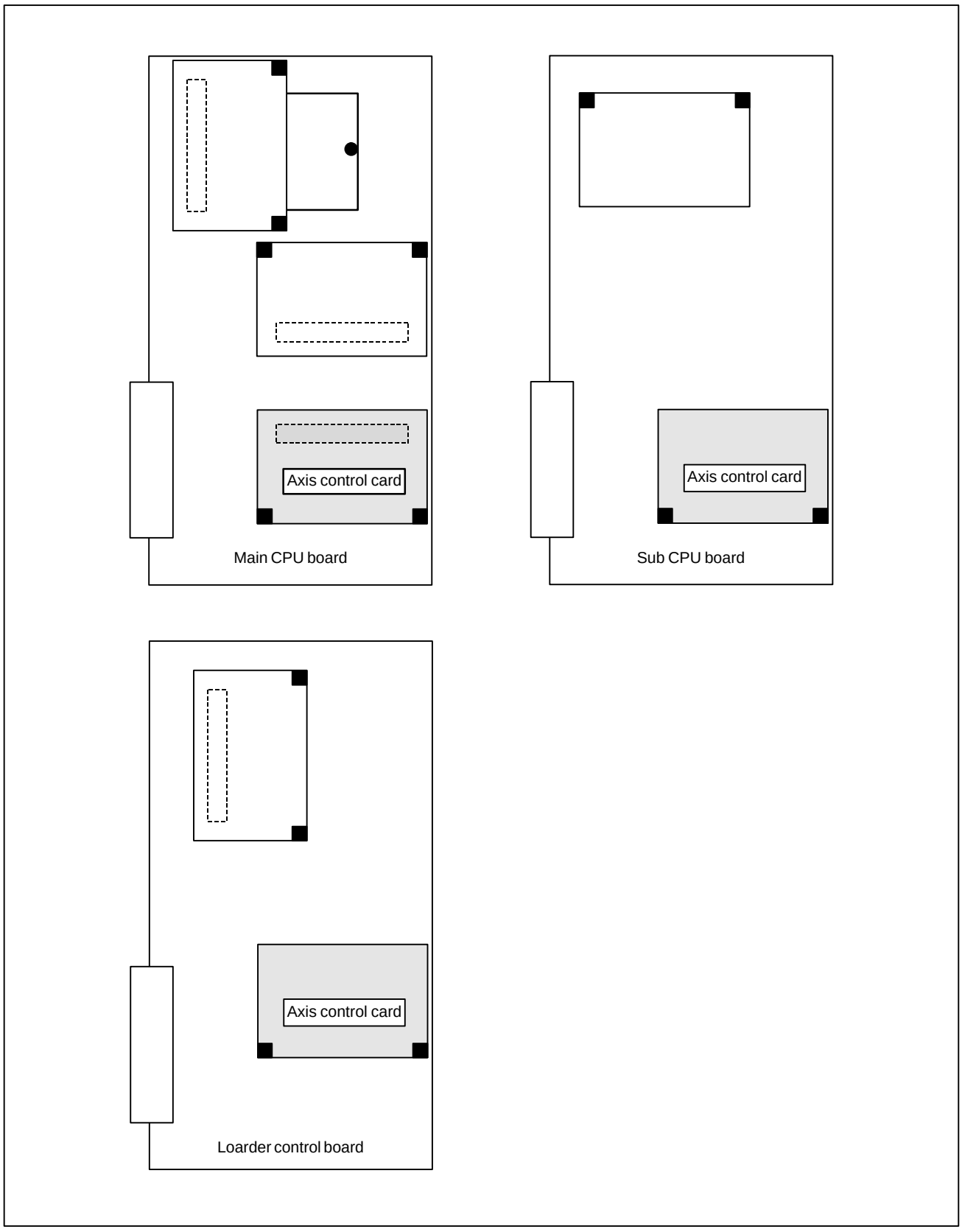

11.17 ALARM 462 (SEND CNC DATA FAILED) ALARM 463 (SEND SLAVE DATA FAILED)

Causes and actions

Alarm 462 is issued if a slave (servo amplifier) cannot receive correct data due to an FSSB communication error.
Alarm 463 is issued if the CNC cannot receive correct data due to an FSSB communication error.
If these alarms are issued, the alarm message indicates the number of the defective axis (axis name).

- **Servo amplifier or optical cable**

  Any of the optical cables between the CNC control unit and the amplifier corresponding to the axis number indicated in the alarm message may be defective.
  Or, any of the first amplifier to the amplifier corresponding to that axis number may be defective.

- **Axis control cards**

  The axis control cards installed on the CNC may be defective.

- **Installation positions of the axis control cards**

[For the LCD–mounted type]

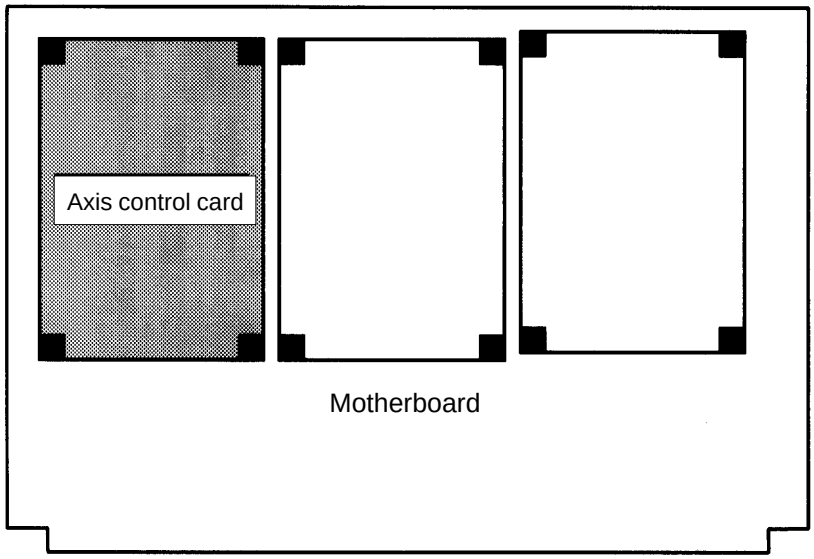

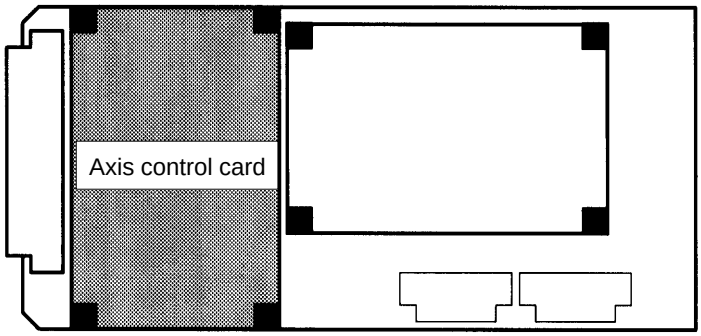

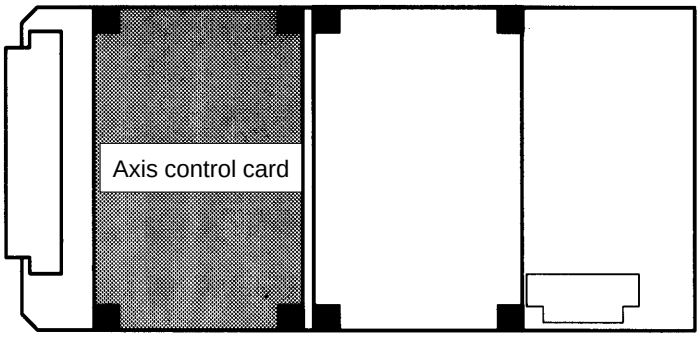

[For the stand–alone type]

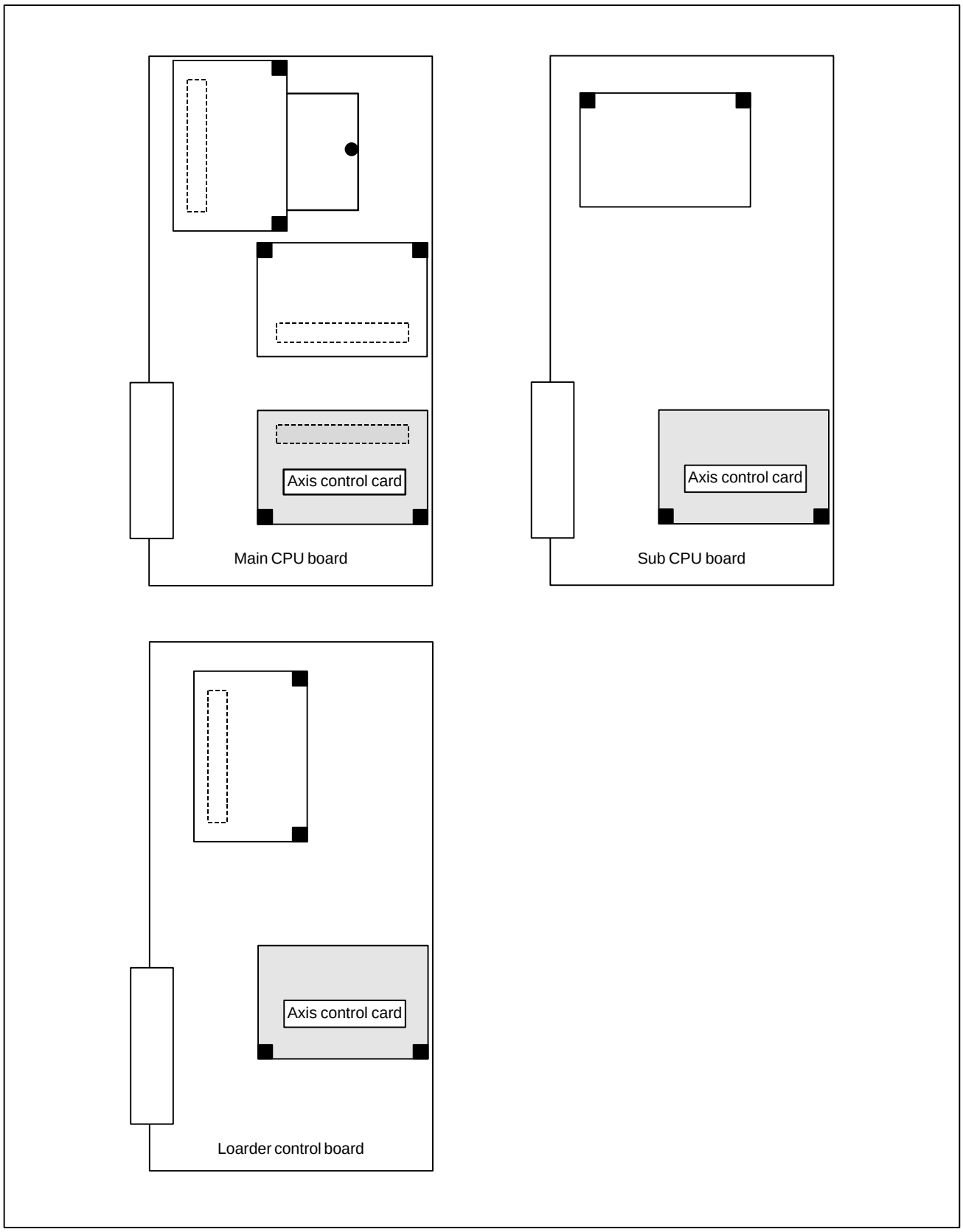

11.18 ALARM 417 (DIGITAL SERVO SYSTEM IS ABNORMAL)

Digital servo parameters are abnormal.
(Digital servo parameters are set incorrectly.)

- **Causes**

1 Confirm the setting value of the following parameters:
PRM 2020 : Motor format number
PRM 2022 : Motor rotation direction
PRM 2023 : Number of pulses of velocity feedbacks
PRM 2024 : Number of pulses of position feedback
PRM 1023 : Servo axis number
PRM 2084 : Flexible feed gear ratio
PRM 2085 : Flexible feed gear ratio
Confirm the details with diagnosis function of CNC side.
2 Change the setting of this parameter to 0.
PRM 2047 : Observer parameter
3 Perform initial setting of digital servo parameters.
Refer to setcion 6.1 “Initial Setting of Servo Parameters” .

This data indicates the cause of servo alarm No. 417, detected by the NC. If the alarm is detected by the servo, the PRM bit (bit 4 of DGN No. 0203) is set to 1.

	#7	#6	#5	#4	#3	#2	#1	#0
0280		AXS		DIR	PLS	PLC		MOT

#0(MOT) : The motor type specified in parameter No. 2020 falls outside the predetermined range.

#2(PLC) : The number of velocity feedback pulses per motor revolution, specified in parameter No. 2023, is zero or less. The value is invalid.

#3(PLS) : The number of position feedback pulses per motor revolution, specified in parameter No. 2024, is zero or less. The value is invalid.

#4(DIR) : The wrong direction of rotation for the motor is specified in parameter No. 2022 (the value is other than 111 or –111).

#6(AXS) : In parameter No. 1023 (servo axis number), a value that falls outside the range of 1 to the number of controlled axes is specified. (For example, 4 is specified instead of 3.) Alternatively, the values specified in the parameter are not consecutive.

11.19 ALARM 700 (OVERHEAT: CONTROL UNIT)

Causes and actions

This alarm is issued if the ambient temperature of the CNC control unit is abnormally high. As an installation condition, the ambient temperature of the CNC must not exceed 58°C (for LCD–mounted type CNC) or 55°C (for stand–alone type CNC).

- **Ambient temperature**

A temperature monitoring circuit is installed on the motherboard (main CPU board), and causes this alarm to be issued if the ambient temperature is abnormally high.
Take appropriate action to the cabinet that houses the CNC control unit so that the temperature falls within the proper temperature range (0 to 58°C (for LCD–mounted type CNC) or 0 to 55°C (for stand–alone type CNC).
If it is obvious that the ambient temperature is not abnormal, the motherboard (main CPU board) may be defective.

11.20 ALARM 701 (OVERHEAT: FAN MOTOR)

Causes and actions

This alarm is issued if a fault occurs in any of the fan motors, such as the stoppage of a fan motor during the operation of the CNC.

- **Fan motors**

Fan motors are installed in the uppermost portion of the CNC control unit. Each fan motor is attached with an alarm detector circuit, which notifies the CNC of a fault such as the stoppage of the fan motor, thereby issuing this alarm.
If this alarm is issued, replace the fan motor.

[For the LCD–mounted type]

For units without option slots

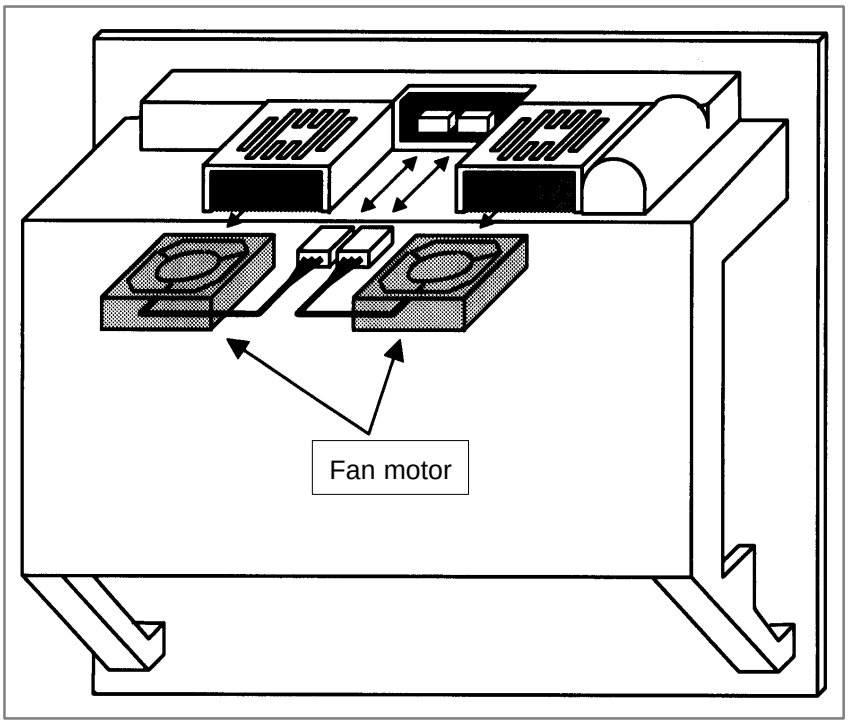

Specifications of fan motors

	Ordering information	Quantity required
Unit without option slots	A02B–0236–K120	Two
Unit with two option slots	A02B–0281–K121	Two
Unit with three option slots	A02B–0281–K121	Two
	A02B–0236–K122	Two
Unit with four option slots	A02B–0281–K121	Four

[For the stand–alone type] For the stand–alone type, a fan can be replaced together with its case.

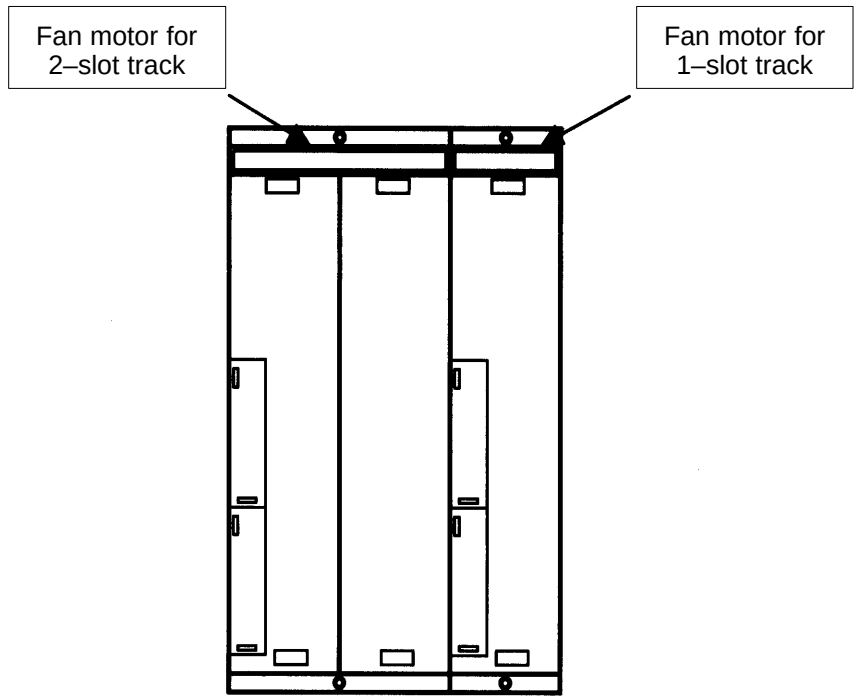

Specifications of fan motors

	Ordering information
For 1–slot track	A02B–0265–C101
For 2–slot track	A02B–0260–C021

11.21 ALARM 704 (SPINDLE SPEED FLUCTUATION DETECTION ALARM)

Spindle speed changes abnormally due to load.

Remedies

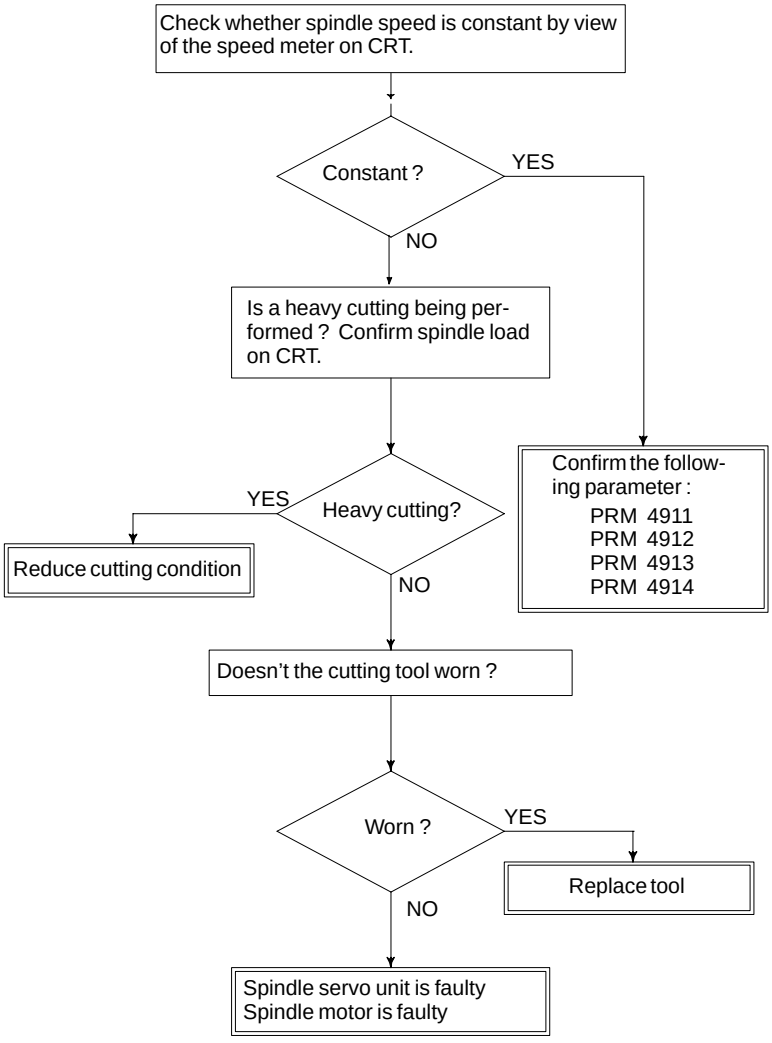

Remedies

PRM 4911 : A ratio of spindle speed at which actual spindle speed is regarded as arrived at a command spindle speed.

PRM 4912 : Spindle speed fluctuation ratio up to which the spindle speed fluctuation detection alarm is not issued.

PRM 4913 : Spindle speed fluctuation that is not regarded as the spindle speed fluctuation alarm.

PRM 4914 : Time when a spindle speed changed to when spindle speed fluctuation detection is started.

11.22 ALARM 749 (SERIAL SPINDLE COMMUNICATION ERROR)

Causes and actions

An error occurred in the communication between the serial spindle amplifier (SPM) and the CNC. The probable causes include:

- Contact failure of the connection cable
- Defective printed circuit board on the CNC
- Defective spindle amplifier
- Noise

- **Connection cable**

Check that the cable connecting the serial spindle amplifier (SPM) to the CNC is in contact.
Check that the cable is inserted firmly into the connectors and that it does not have any conductors likely to be cut off.
Check that the cable used is a twisted–pair cable and that it is connected as described in the connection manual.

- **Printed circuit boards on the CNC**

A spindle control circuit for the CNC is installed on the motherboard and the sub–CPU board. If this alarm is issued from the main CPU, replace the motherboard. If it is issued from the sub–CPU, replace the sub–CPU board.

- **Spindle amplifier module (SPM)**

When an error occurred on the spindle amplifier module (SPM) side, a code of A, A1, or A2 is indicated on the SPM depending on the nature of the error.
In this case, take appropriate actions in FANUC SERVO MOTOR αi series Maintenance Manual (B–65285EN) or FANUC SERVO MOTOR α series Maintenance Manual (B–65165E).

- **Noise environment**

If any of the above actions does not solve the problem, examine the noise environment of the connection cable.
See the section on the measures against noise, take appropriate actions such as the reinforcement of the cable shield and the separation of the cable from the power line.

11.23 ALARM 750 (SPINDLE SERIAL LINK STARTUP FAILURE)

Causes and actions

This alarm is issued if a serial spindle amplifier (SPM) does not enter the normal startup state when the CNC is turned on.
This alarm is not issued once the CNC system including the spindle amplifiers has started up normally. It is issued if a fault occurs in the power–on process.
The probable causes include the following:

- Contact failure, wiring error, or connection error of the connection cable
- The CNC is turned on when a spindle amplifier is in the alarm state.
- Parameter setting error
- Defective printed circuit board on the CNC
- Detective spindle amplifier

● Connection

Up to four serial spindle amplifiers (SPMs) can be connected per path. Note, however, the number of amplifiers that can be connected differs depending on the model, number of paths, and configuration. Refer to the Connection Manual (Hardware).

[Diagram of connection of up to two amplifiers per path]

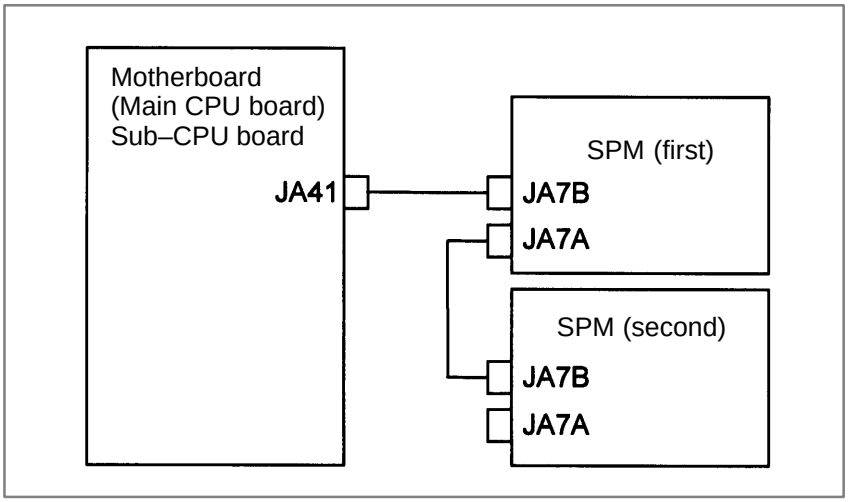

[Diagram of connection of three or four amplifiers per path]

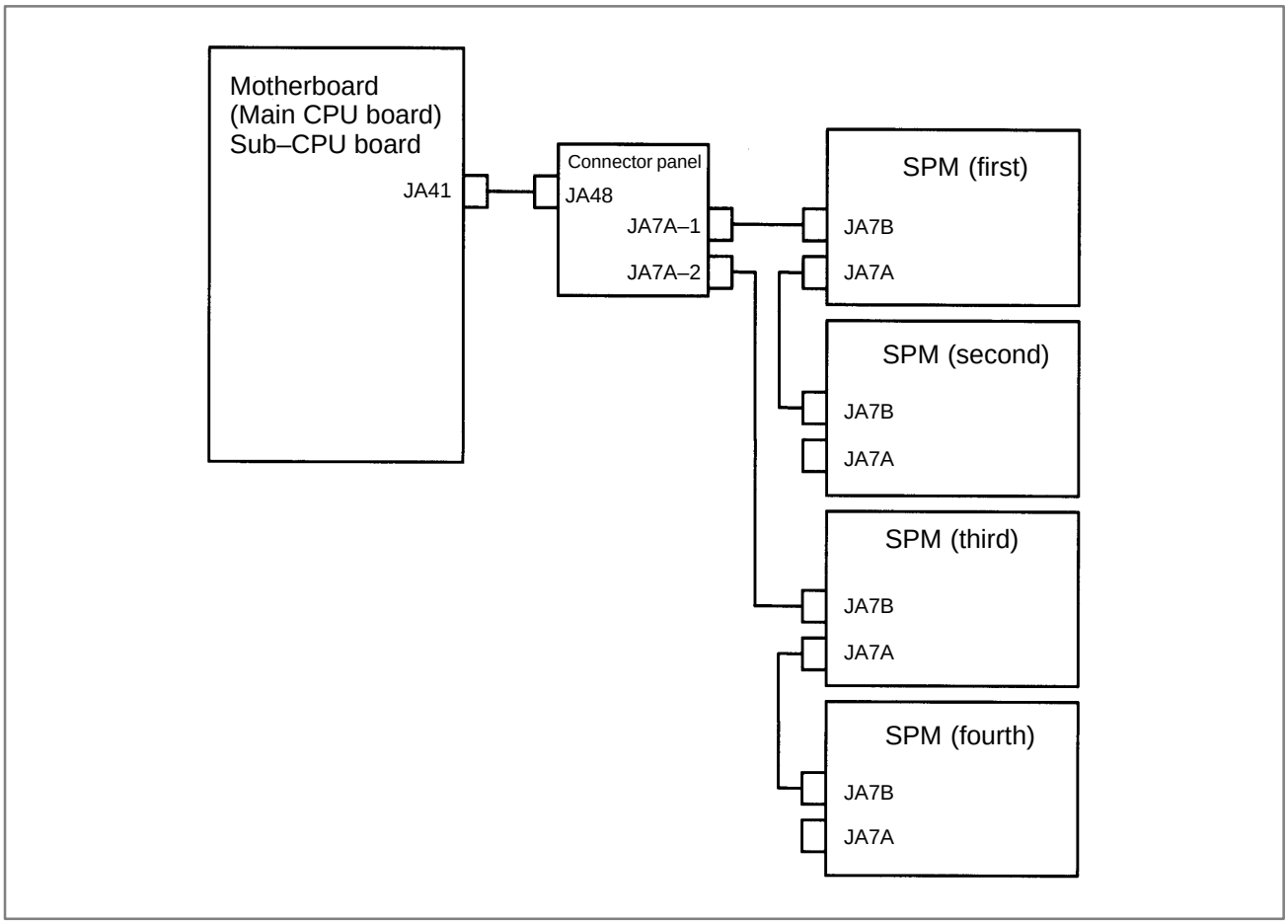

Check that the cables are connected as shown in the figure above. Check that JA7Bs and JA7As are connected correctly.
Check that the cables are latched firmly and are not loose.
Refer to the Connection Manual (Hardware) to check that the cables are connected correctly.

- **States of the spindle amplifiers**

This alarm is issued if the CNC is turned on when the LED of a spindle amplifier indicates a number other than “24”.
On the spindle amplifier, remove the cause of the alarm. Turn off the spindle amplifier and the CNC, then turn on the system again.

- **Details of the alarm**

If this alarm is issued, its details can be checked with diagnosis numbers 409 and 439.

- **1st and 2nd spindles**

	#7	#6	#5	#4	#3	#2	#1	#0
0409					SPE	S2E	S1E	SHE

SPE: 0 : In the spindle serial control, the serial spindle parameters fulfill the spindle unit startup conditions.
1 : In the spindle serial control, the serial spindle parameters do not fulfill the spindle unit startup conditions.

S2E: 0 : The second spindle is normal during the spindle serial control startup.
1 : The second spindle was detected to have a fault during the spindle serial control startup.

S1E: 0 : The first spindle is normal during the spindle serial control startup.
1 : The first spindle was detected to have a fault during the spindle axis serial control startup.

SHE: 0 : The serial communications circuit in the CNC is normal.
1 : The serial communications circuit in the CNC was detected to have a fault.

- **3rd and 4th spindles**

The details of spindle alarm No. 750 are displayed in the diagnosis display (No. 409) as shown below.

	#7	#6	#5	#4	#3	#2	#1	#0
0409					SPE	S4E	S3E	SHE

SPE: 0 : In the spindle serial control, the serial spindle parameters fulfill the spindle unit startup conditions.
1 : In the spindle serial control, the serial spindle parameters do not fulfill the spindle unit startup conditions.

S4E: 0 : The fourth spindle is normal during the spindle serial control startup.
1 : The fourth spindle was detected to have a fault during the spindle serial control startup.

S3E: 0 : The third spindle is normal during the spindle serial control startup.
1 : The third spindle was detected to have a fault during the spindle axis serial control startup.

SHE: 0 : The serial communications circuit in the CNC is normal.
1 : The serial communications circuit in the CNC was detected to have a fault.

1) If SPE is set to “1”
Re–check the serial spindle parameters with numbers 4000 to 4999.

2) If S1E is set to “1”
Because a fault was detected on first spindle, check its connection and parameter settings.

3) If S2E is set to “1”
Because a fault was detected on second spindle, check its connection and parameter settings. This alarm is issued if the parameter settings are such that second spindle is used although only first spindle is used.

4) IF S3E is set to ”1”
Because a fault was detected on third spindle, check its connection and parameter settings.
An alarm also occurs when the setting is made so that the third axis is intended to be connected even though it is not actually connected.

5) IF S4E is set to ”1”
Because a fault was detected on fourth spindle, check its connection and parameter settings.
An alarm also occurs when the setting is made so that the fourth axis is intended to be connected even though it is not actually connected.

If any of the above actions does not solve the problem, the motherboard, servo CPU board, or spindle amplifier may be defective.

6) If SHE is set to “1”
Replace the motherboard or sub–CPU board.

11.24 ALARM 5134 (FSSB: OPEN READY TIME OUT)

ALARM 5135 (FSSB: ERROR MODE)

ALARM 5137 (FSSB: CONFIGURATION ERROR)

ALARM 5197 (FSSB: OPEN TIME OUT)

ALARM 5198 (FSSB: ID DATA NOT READ)

Causes and actions

These alarms are issued if any of the axis control cards and the slaves (such as servo amplifiers) and optical cables connected to the FSSB is defective.

No.	Message	Description
5134	FSSB: OPEN READY TIME OUT	The FSSB did not become ready to open during initialization.
5135	FSSB: ERROR MODE	The FSSB entered an error mode.
5137	FSSB: CONFIGURATION ERROR	The FSSB detected a configuration error.
5197	FSSB: OPEN TIME OUT	The FSSB did not open when the CNC had allowed the FSSB to open.
5198	FSSB: ID DATA NOT READ	The initial ID information for the amplifier cannot be read because of a failure in the temporary assignment.

- **Processing of the FSSB at power on**

The processing of the FSSB at power on is as described below:

1 The CNC initializes the FSSB and the servo.
2 The servo returns the first ready signal.
3 The first ITP interrupt is generated.
4 The CNC waits for the FSSB to become ready to open.
5 The CNC checks that the FSSB did not detect a configuration error.
6 The CNC allows the FSSB to open.
7 The CNC checks that the FSSB has opened.
8 The servo returns the second ready signal.
9 Normal operation

If the FSSB does not become ready to open in 4, alarm 5134 is issued.
If an error is detected in 5, alarm 5137 is issued.
If the FSSB does not open within a fixed period of time, alarm 5197 is issued.
If the ready signal is not returned within a fixed period of time, alarm 5198 is issued.

- **Checking the parameter settings**

  Check that the FSSB–related parameters are set correctly.

- **Power supplies of the servo amplifiers**

  Check the power supplies of the servo amplifiers connected to the FSSB.

- **Replacing the axis control cards, optical cables, and servo amplifiers**

  Replace the axis control cards on the CNC.
  Replace the optical cables and servo amplifiers connected to the FSSB, one at a time, to identify the defective item.

- **Installation positions of the axis control cards**

[For the LCD–mounted type]

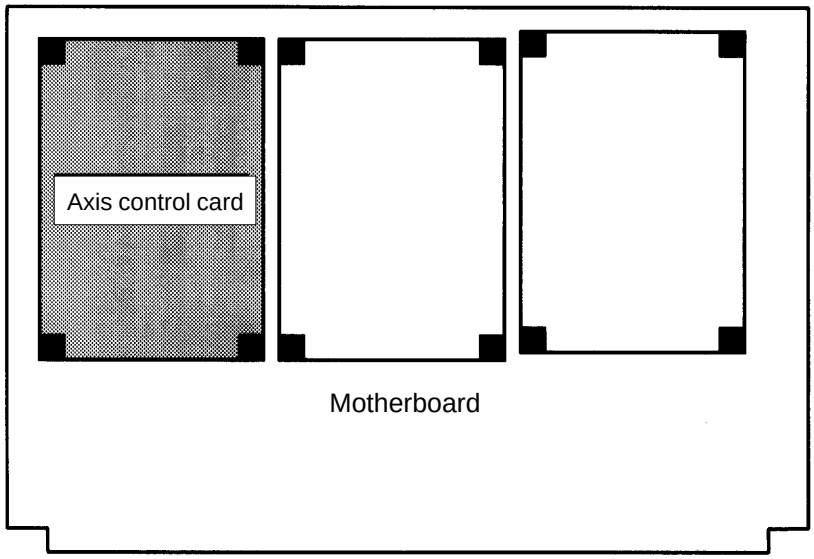

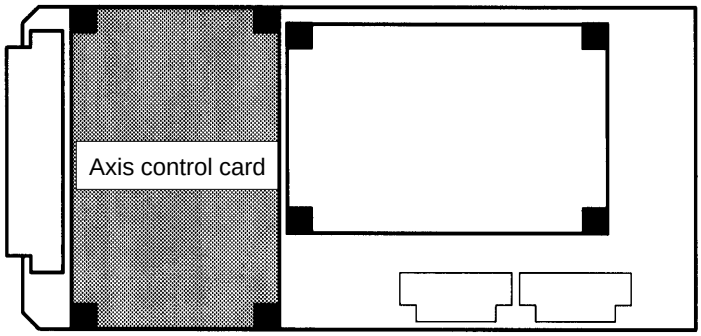

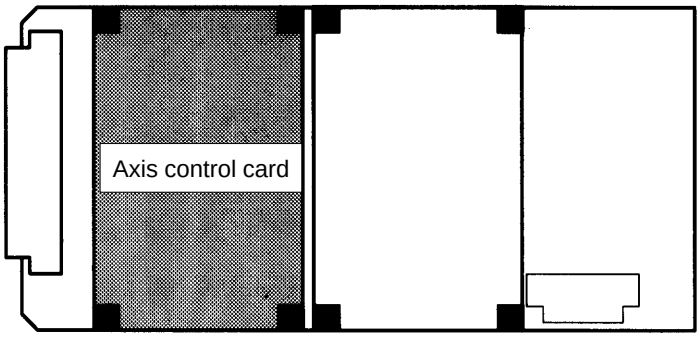

[For the stand–alone type]

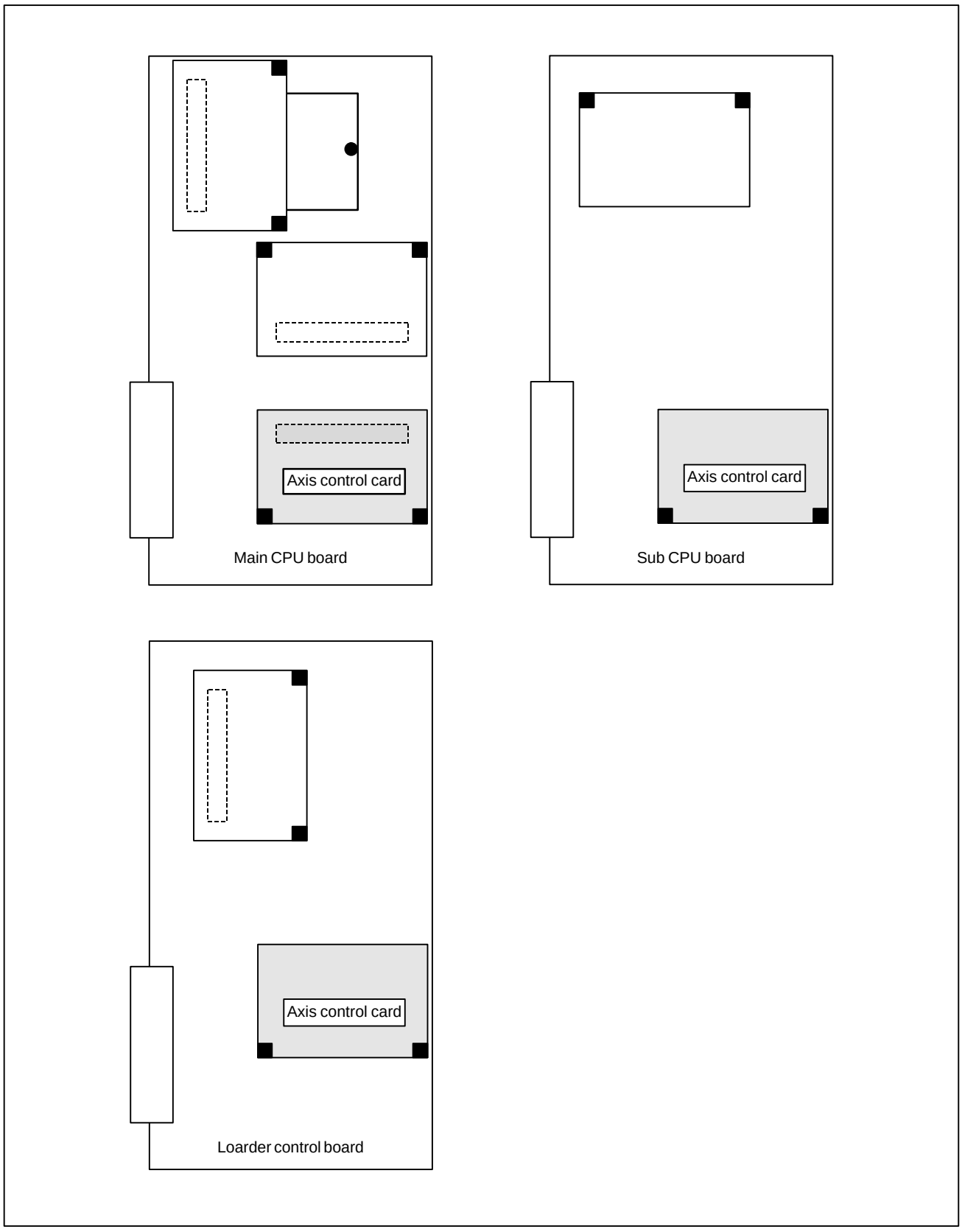

11.25 ALARM 5136 (FSSB: NUMBER OF AMPS IS SMALL)

Causes and actions

The number of servo amplifiers recognized by the FSSB is insufficient, compared with the number of controlled axes.

- **FSSB setting screen**

  If this alarm is issued, display the amplifier setting screen from the FSSB setting screen. Only the servo amplifiers recognized on the FSSB are displayed.

- **Optical cable or servo amplifier**

  The optical cable that connects together the last recognized amplifier and the next one may be defective.
  Or, either of the amplifiers connected together with that optical cable may be defective. Check the power supplies of the amplifiers.

- **Power fault of a servo amplifier**

  This alarm may be issued if a power fault occurs in a servo amplifier. A power fault occurs if the amplifier control power supply voltage drops, if the +5 V conductor of the pulse coder cable is ground, or for other reasons.

- **Axis control cards**

  The axis control cards installed on the CNC may be defective.

- **Installation positions of the axis control cards**

[For the LCD–mounted type]

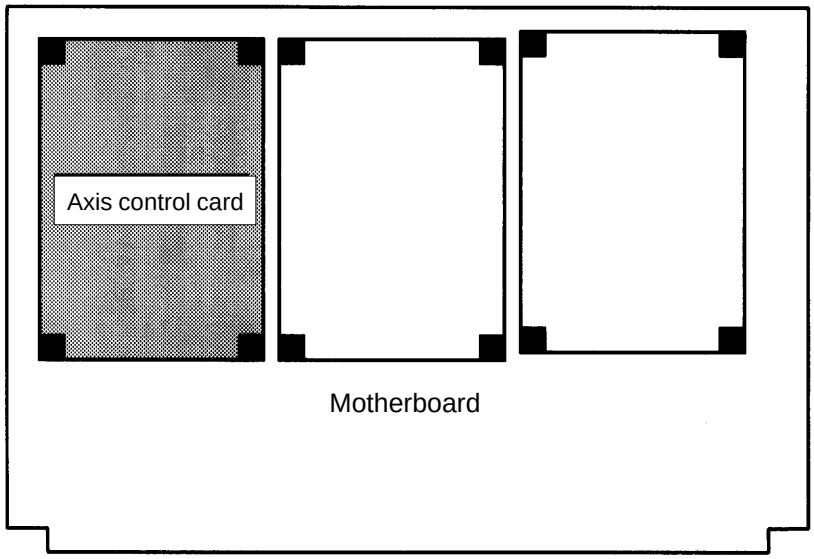

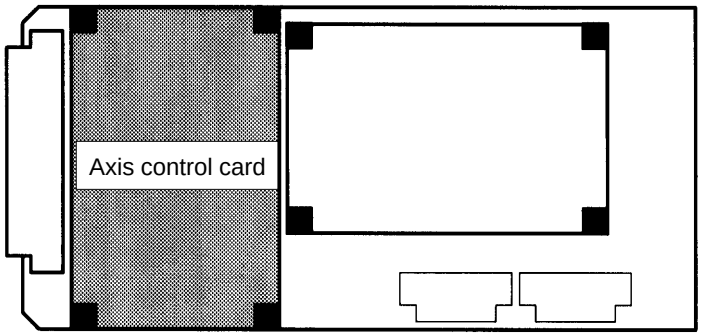

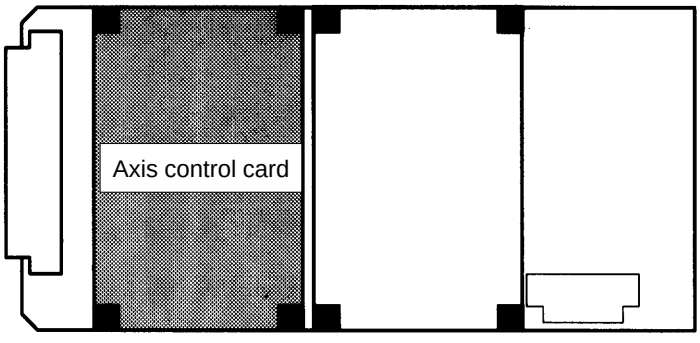

[For the stand–alone type]

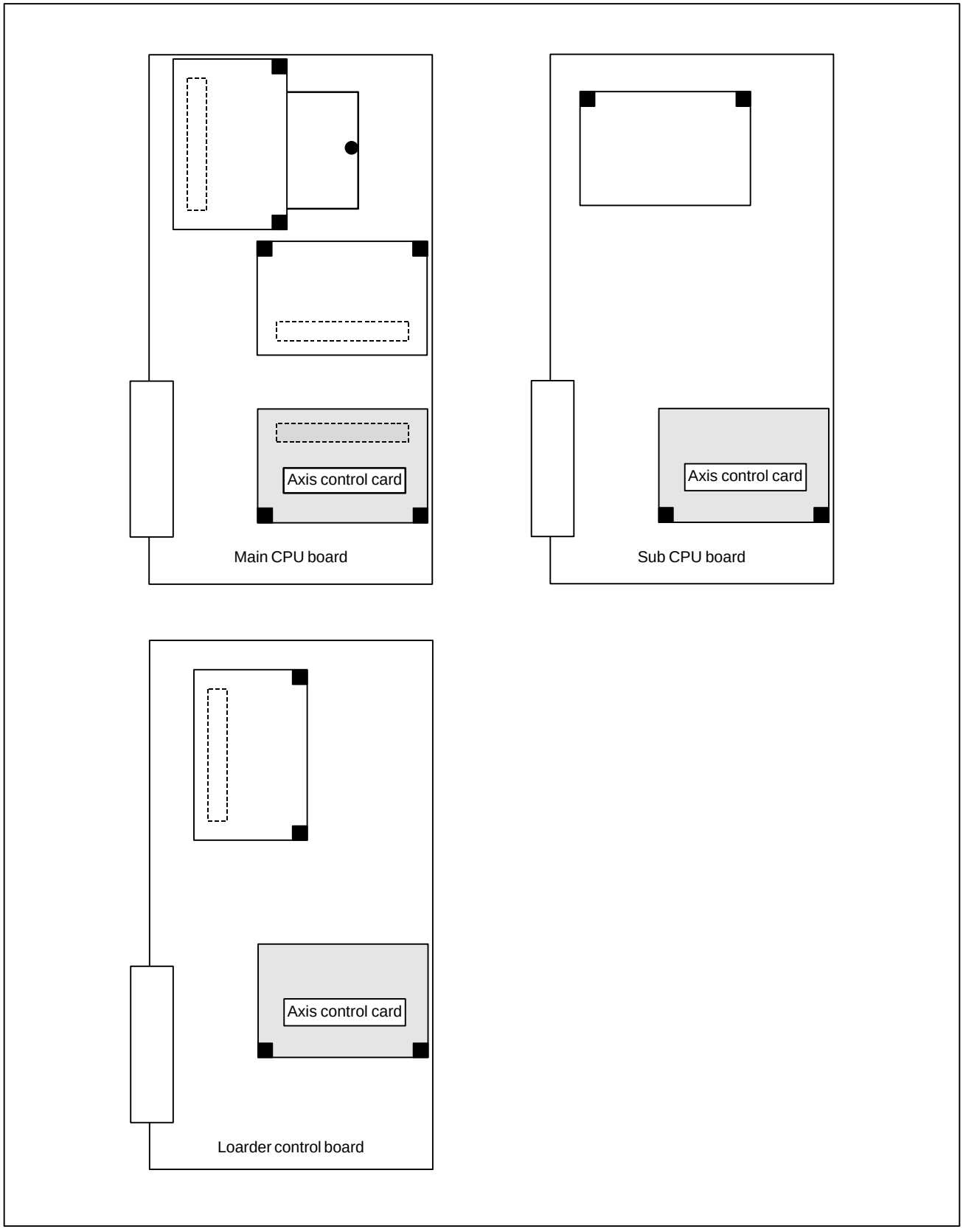

11.26 ALARM 900 (ROM PARITY)

Causes and actions

A ROM parity error occurred.

The software including the CNC system software, servo software, PMC management software, and PMC Ladder is stored in the flash memory on the FROM/SRAM module. It starts execution after being loaded into the RAM of the DRAM module or servo card at power on.
A ROM parity error occurs if the software stored in the FROM/SRAM module is destroyed.

- **Rewriting the software component**

On the screen, the series of the software in which a fault was detected is displayed. Rewrite the software using the boot system.
The software stored in the FROM/SRAM module includes a variety of FANUC software components, as well as those created by the MTB, such as the PMC Ladder.

- **Replacing the FROM/SRAM module**

Replace the FROM/SRAM module
After replacement, all the software that was once stored must be written. Because the replacement clears the contents of the SRAM memory, the memory contents must be restored. For this operation, use the boot system.

- **Replacing the motherboard**

If any of the above actions does not solve the problem, replace the motherboard.

- **Installation position of the FROM/SRAM module**

[For the LCD–mounted type]

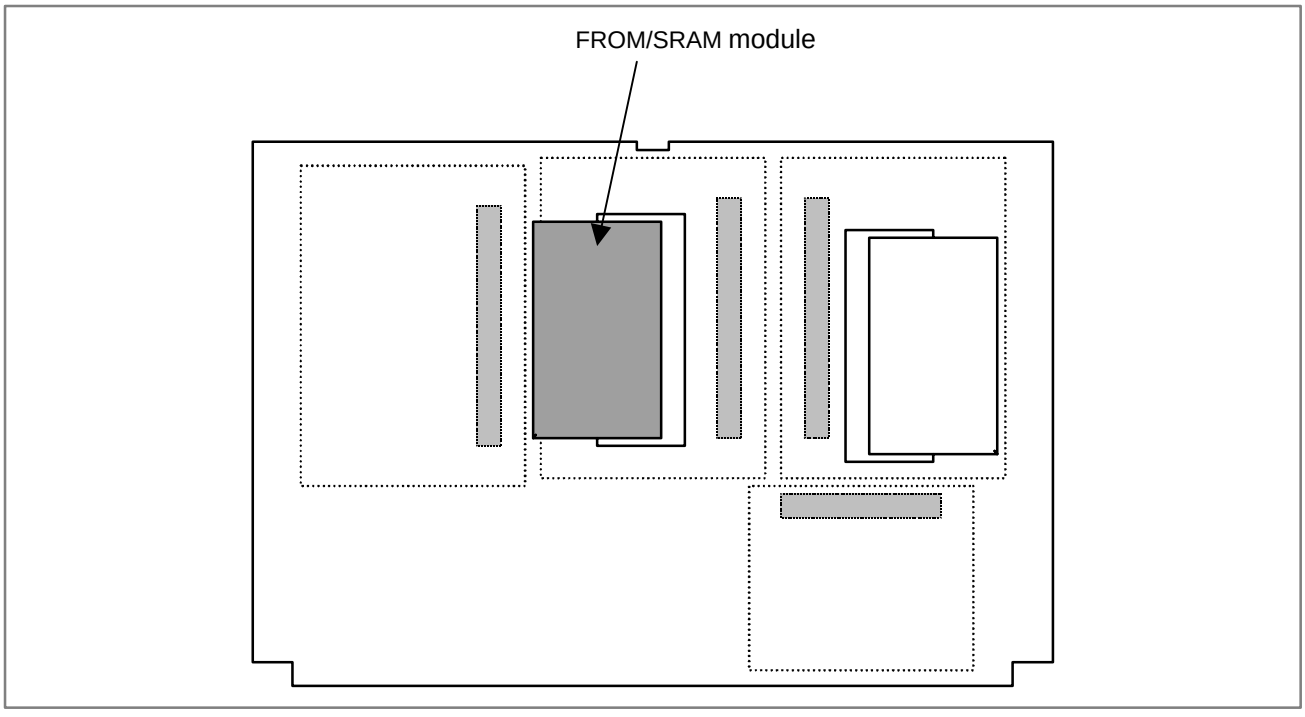

[For the stand–alone type]

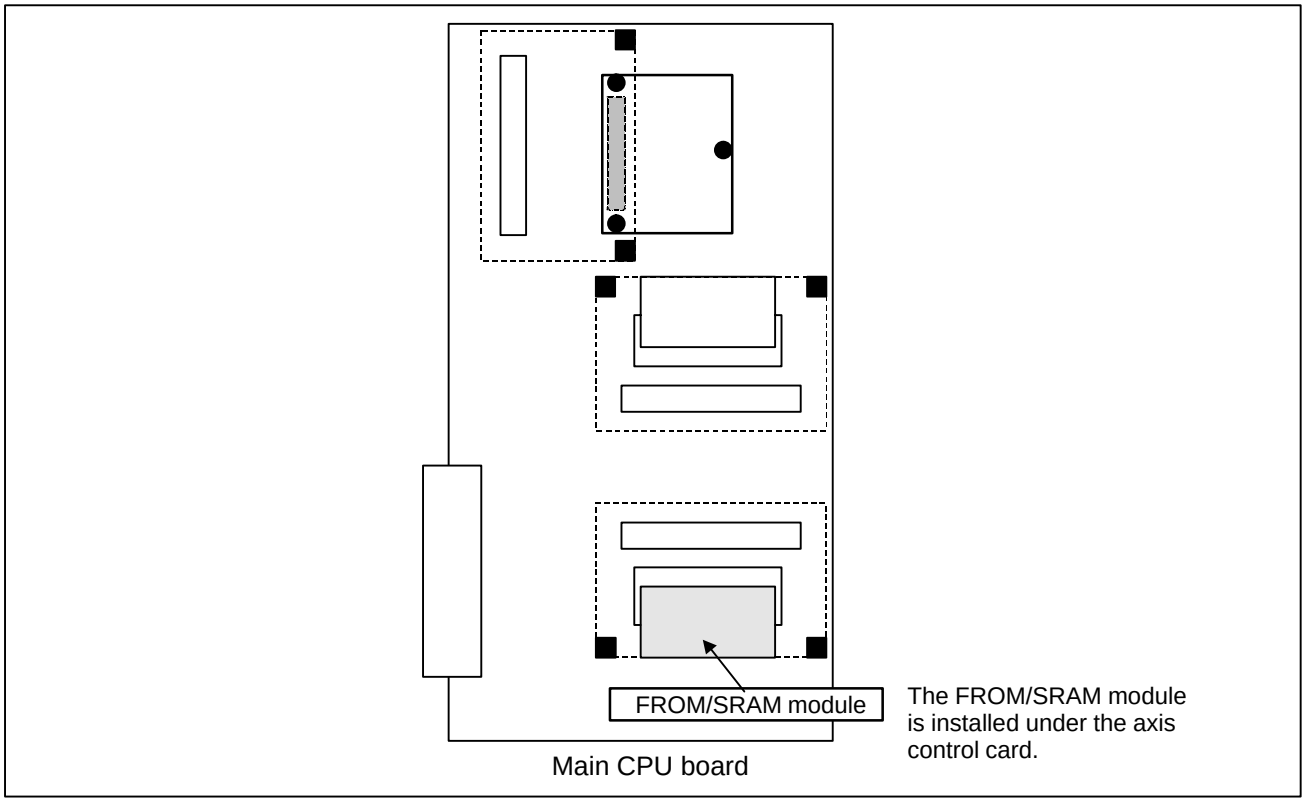

11.27 ALARMS 910 AND 911 (SRAM PARITY)

Causes and actions

A parity error occurred in the SRAM used to store data such as parameters and machining programs.

This alarm is issued if the battery has run down or if the data in the SRAM is destroyed due to some external cause. Or, the SRAM module, motherboard, and option PCB may be defective.

- **Checking the battery**

The battery is rated 3 V. A battery alarm is issued and “BAT” flashes on the screen if the voltage of the battery drops to 2.6 V.
If a battery alarm is issued, replace the battery with a new one promptly.

- **Performing memory all clear**

Perform a memory all clear operation, then start up the CNC. Alternatively, if a backup of the data in the SRAM has been made, use the backup to restore the data. To back up and restore the data in the SRAM, use the boot system.

- **Replacing the FROM/SRAM module**

If memory all clear or the restoration of the data with a backup does not solve the problem, replace the FROM/SRAM module.
After replacing the FROM/SRAM module, perform a memory all clear operation and start up the CNC. All the data must be re–loaded.
If a backup is available, restore the data using the backup, then start up the CNC.

- **Motherboard**

If any of the above actions does not solve the problem, replace the motherboard.

- **Installation position of the FROM/SRAM module**

[For the LCD–mounted type]

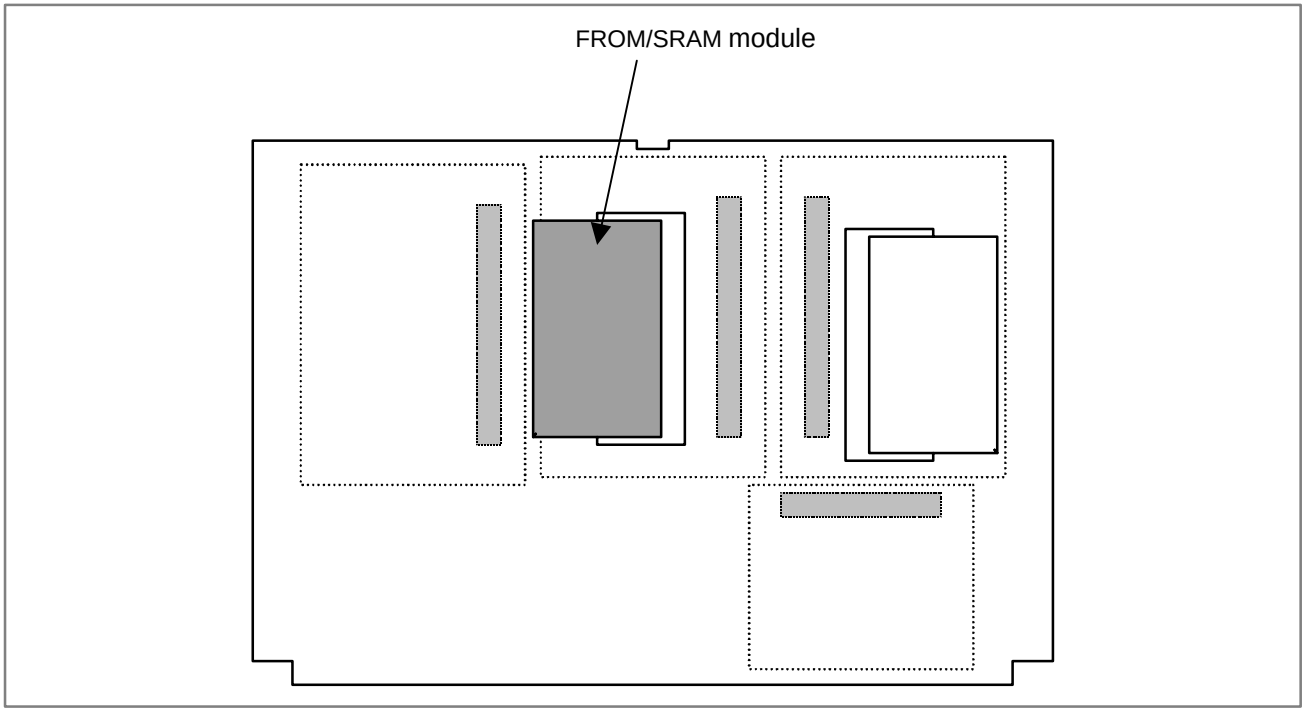

[For the stand–alone type]

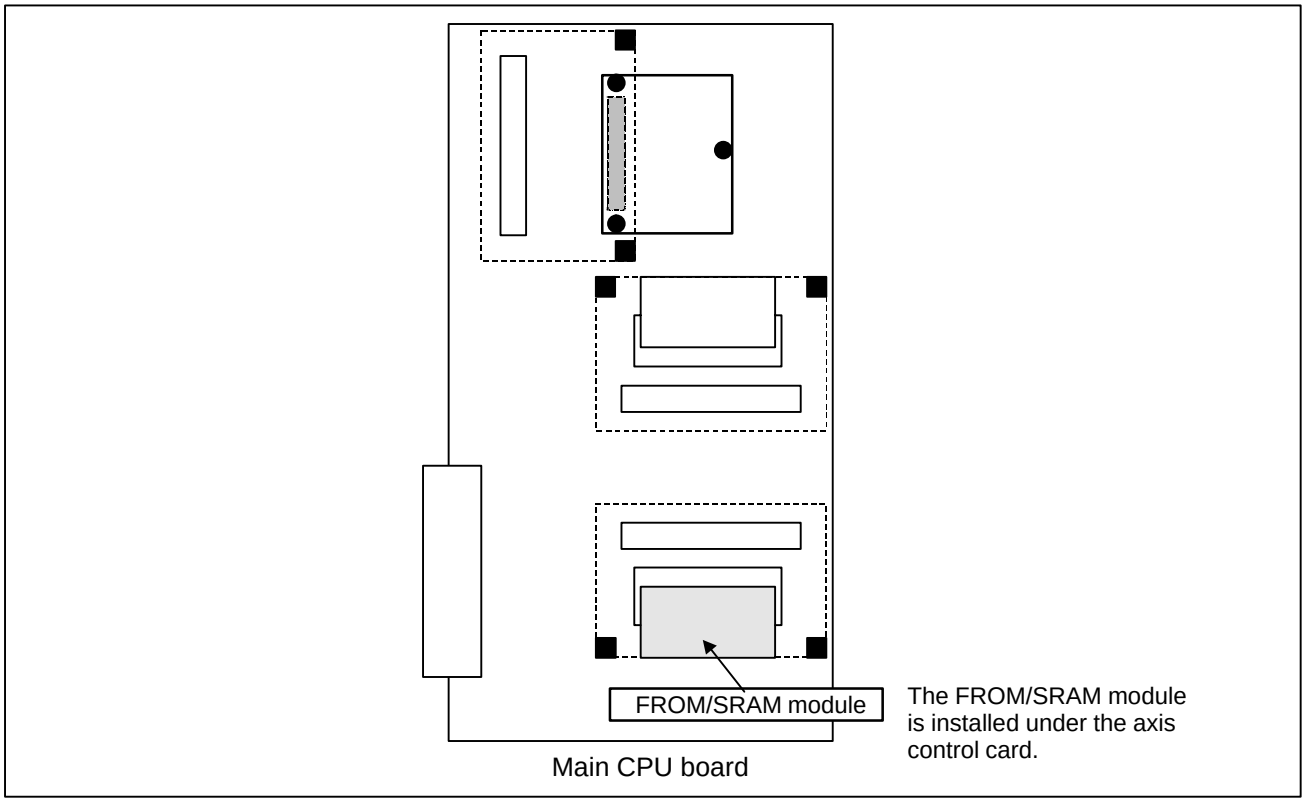

- **SRAM parity on the loader control board or Symbol CAP*i* T board**

If alarm 972 is issued, indicating on the screen that an SRAM parity error occurred on the loader or Symbol CAP*i* T, take appropriate action on the loader control board or Symbol CAP*i* T board.
The SRAM for the loader control board and the Symbol CAP*i* T board is installed on the boards themselves.

Screen display example

```
SYSTEM ALARM

972 NMI OCCURRED IN OTHER MODULE

    SLOT 01
    910 SRAM PARITY : (BYTE 0) <LC
```

11.28 ALARMS 912 TO 919 (DRAM PARITY)

Causes and actions

The management software for the CNC is loaded from the FROM to the DRAM at power on, so that it is executed on the DRAM.

A parity error occurred on this DRAM.
These alarms occur if the data on the DRAM is destroyed due to some external cause or if the CPU card is defective.

- **Replacing the CPU card.**

Replace the CPU card.

- **Installation position of the CPU card**

[For the LCD–mounted type]

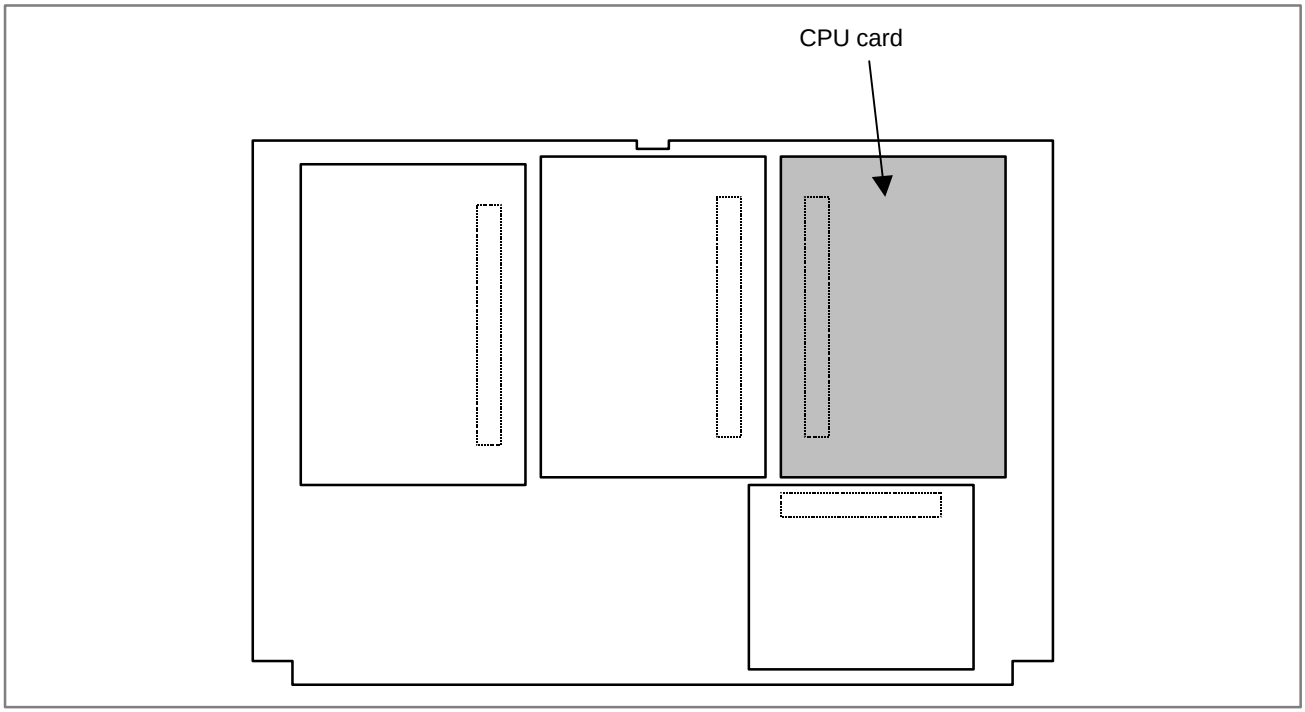

[For the stand–alone type]

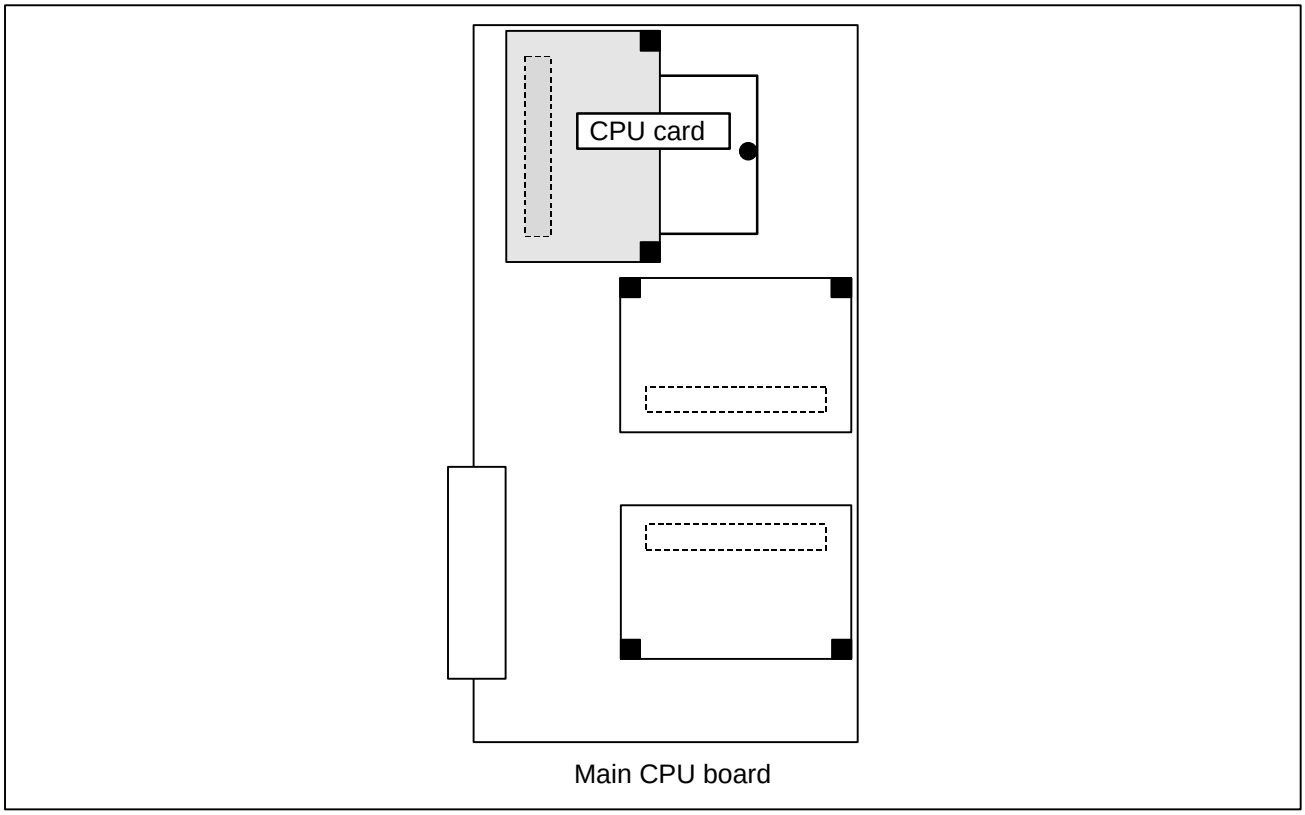

- **DRAM parity on an option board**

If alarm 972 is issued, indicating on the screen that a DRAM parity error occurred on an option board, take appropriate action on the option board on which the DRAM parity error occurred.
Some option boards have a circuit equivalent to the CPU card installed on the boards themselves. See the hardware chapter for details.

Screen display example

```
SYSTEM ALARM

972 NMI OCCURRED IN OTHER MODULE

    SLOT 01
    DRAM PARITY : (BYTE 0) <SUB
```

11.29 ALARMS 920 AND 921 (SERVO ALARMS)

Causes and actions

A watchdog error or RAM parity error occurred in the circuit on an axis control card.

Alarm 920 indicates that either of the above errors occurred in the control circuit for axes 1 to 4. Alarm 921 indicates that either of the above errors occurred in the control circuit for axes 5 to 8.
The optical cable, axis control cards, CPU card, or motherboard may be defective.

- **Watchdog error**

  The servo control circuit monitors the operation of the main CPU. If a fault occurs in the CPU or its peripheral circuit, so that the watchdog timer is not reset, a watchdog error occurs.

- **Replacing the optical cable**

  Replace the optical cable. A defective optical cable may cause this problem.

- **Replacing the axis control cards**

  Replace the axis control cards.

- **Replacing the CPU card**

  Replace the CPU card.

- **Replacing the motherboard (main CPU board)**

  If any of the above actions does not solve the problem, replace the motherboard.

- **Installation position of each card**

[For the LCD–mounted type]

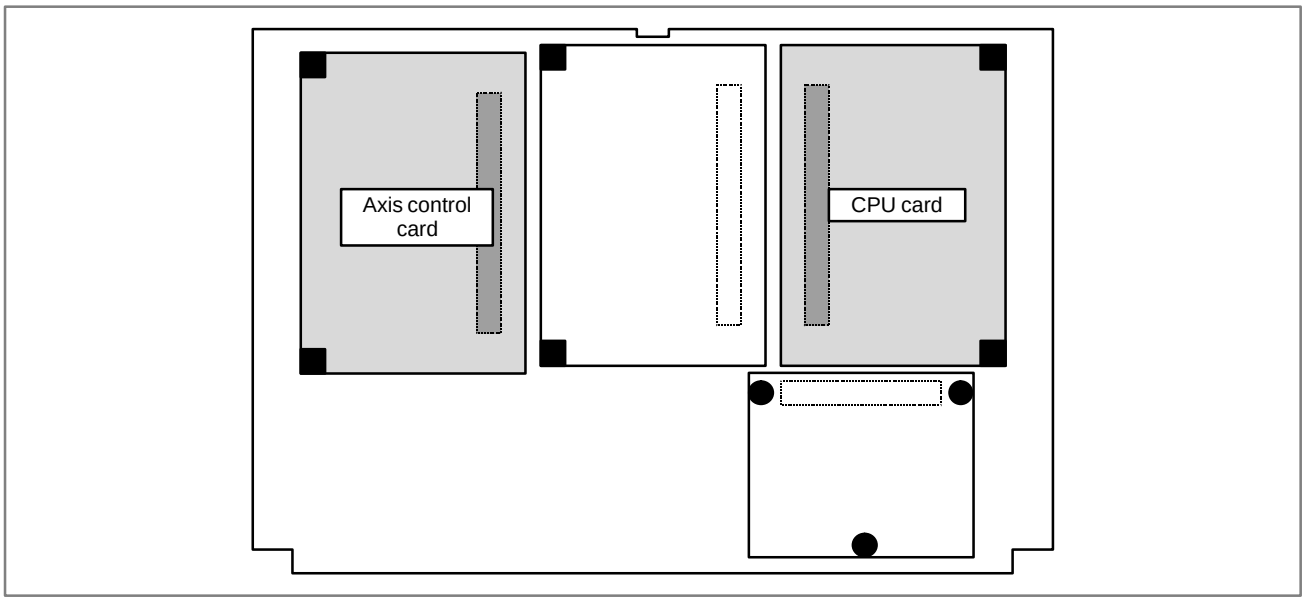

[For the stand–alone type]

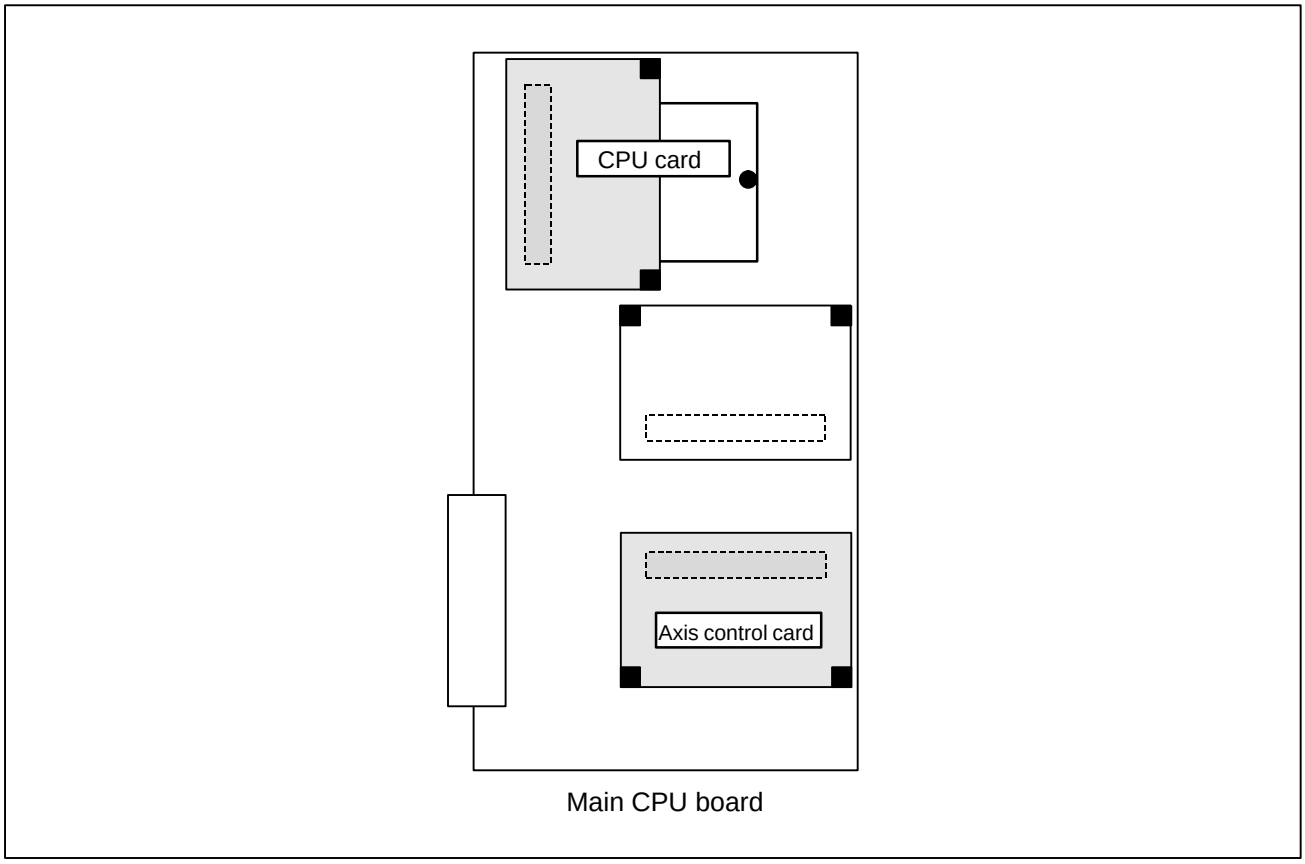

- **Servo alarm on the sub–CPU board or loader control board**

If alarm 972 is issued, indicating on the screen that a servo alarm occurred on the sub–CPU or loader, take appropriate action on the sub–CPU board or loader control board.

Screen display example

```
SYSTEM ALARM

972 NMI OCCURRED IN OTHER MODULE

    SLOT 01
    920 SERVO ALARM <SUB
```

[For the LCD–mounted type]

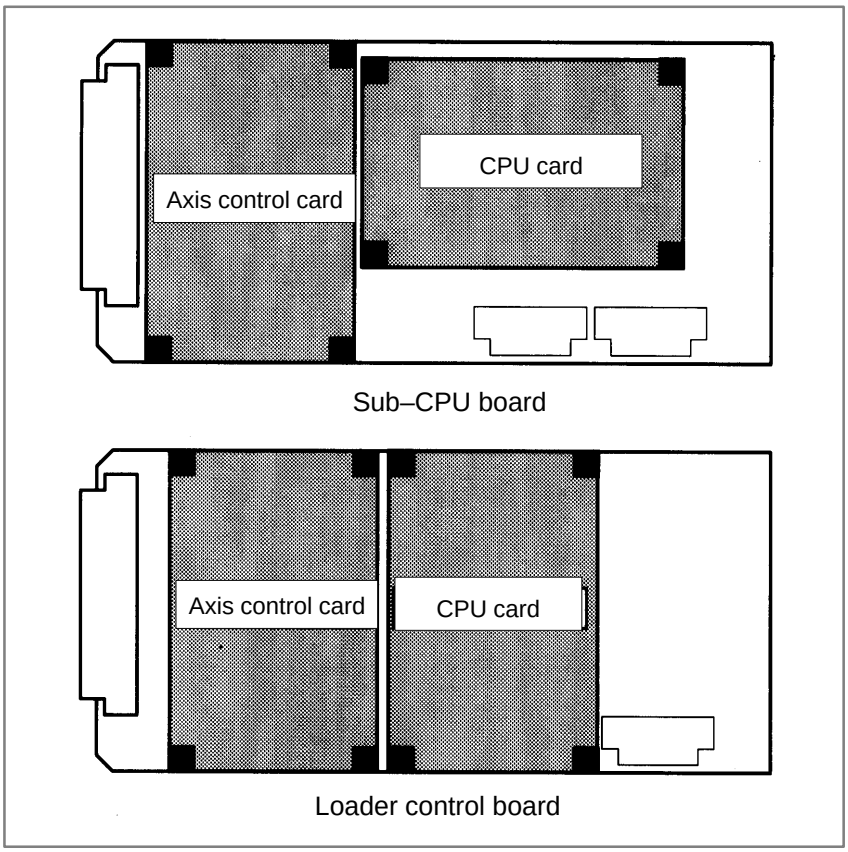

[For the stand–alone type]

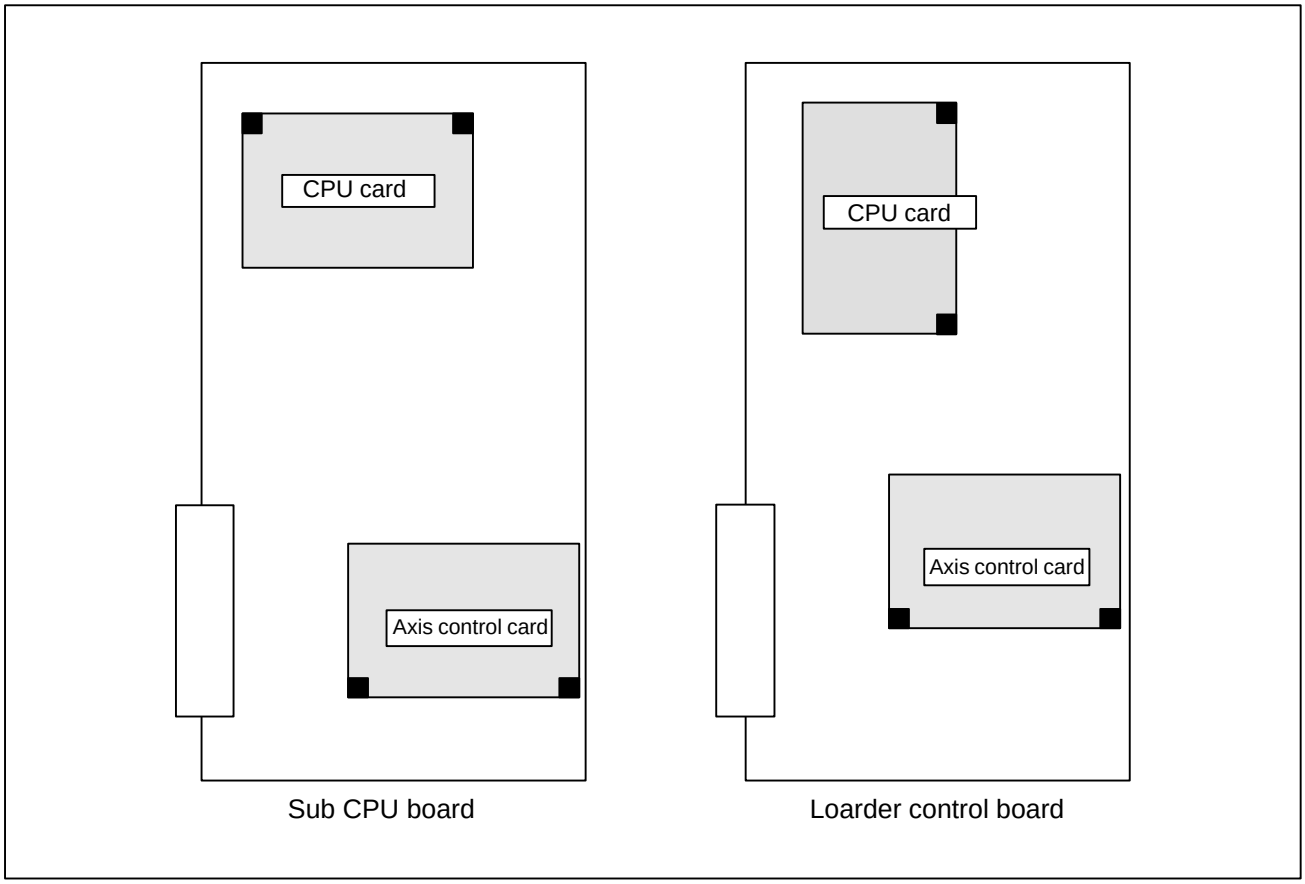

11.30 ALARM 926 (FSSB ALARM)

Causes and actions

A fault occurred on the FSSB (serial servo bus) that connects servo amplifiers to the CNC.

This alarm is issued if a fault occurs in any of the axis control cards making up the FSSB, optical cables, and servo amplifiers.

- **Identifying the defective location**

Use the LEDs on the servo amplifiers.
Using the 7–segment LEDs installed on the servo amplifiers, the defective location can be identified.

FSSB connection example

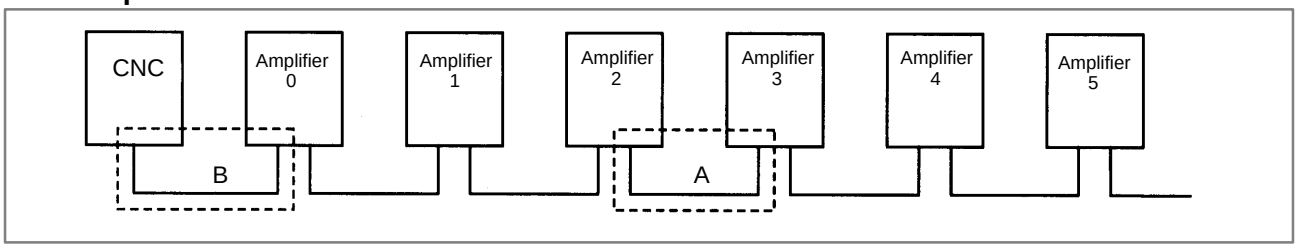

If portion A, indicated by dotted line, contains the defective location, the LEDs on the servo amplifiers will be as shown in the table below.

Amplifier No.	Amplifier 0	Amplifier 1	Amplifier 2	Amplifier 3	Amplifier 4	Amplifier 5
LED display	"–"	"–"	"L" or "–"	"U"	"U"	"U"

In this case, any of the following locations may be defective:

(1) Optical cable connecting together the servo amplifier whose LED is "L" or "–" and that whose LED is "U". In the above figure, the optical cable in portion A may be defective.

(2) Either of the servo amplifier whose LED is "L" or "–" and that whose LED is "U". In the above figure, either amplifier 2 or 3 may be defective.

If portion B, indicated by dotted line, contains the defective location, the LEDs on the servo amplifiers will be as follows:

Amplifier No.	Amplifier 0	Amplifier 1	Amplifier 2	Amplifier 3	Amplifier 4	Amplifier 5
LED display	"–" or "U"					

In this case, any of the following locations may be defective:

(1) Optical cable connected to the CNC. In the above figure, the optical cable in portion B may be defective.

(2) Any of the axis control cards in the CNC

(3) First servo amplifier connected. In the above figure, amplifier 0 may be defective.

- **Identifying the defective location**

Use the display on the CNC screen
If alarm 926 is issued, information such as the following is displayed at the bottom of the CNC screen. It can be used to identify the defective location.

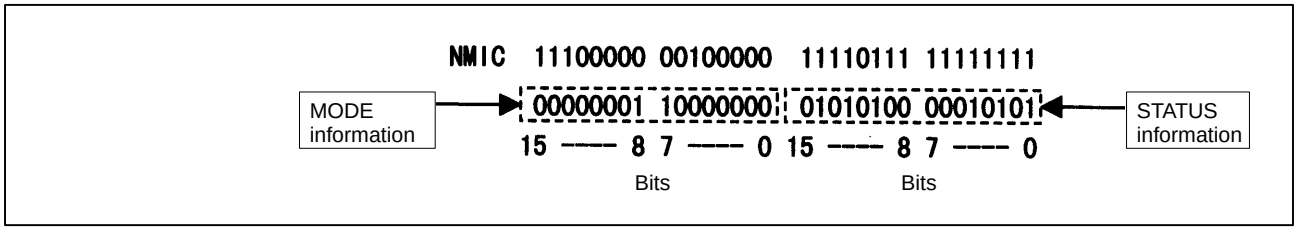

Bits 12 to 15 of the MODE information indicate the number of the slave in which the alarm occurred. The unit nearest the CNC (such as a servo amplifier) is assigned a slave number of “0”. For a 2–axis amplifier, for example, one number is assigned for the first axis, and the next number is assigned for the second.

Details of the MODE information

Bit	15	14	13	12	11 ◄——► 0
Description	Number of the slave in which the alarm occurred				No meaning

0000: Indicates that the alarm occurred in slave 0.
0001: Indicates that the alarm occurred in slave 1.
:
:
1001: Indicates that the alarm occurred in slave 9.

Using the bits of the STATUS information, the fault can be estimated.

Details of the STATUS information

Bit	15 ◄——► 12	11	10	9	87	6	5	4	3 ◄——► 0
Description	No meaning	External alarm	Broken master port	Broken slave port	No meaning	Broken master port	No meaning	Error on slave	No meaning
A	xxxx	0	0	0	x x	1	x	0	xxxx
A	xxxx	0	1	0	x x	0	x	1	xxxx
B	xxxx	0	0	1	x x	0	x	1	xxxx
C	xxxx	1	0	0	x x	0	x	1	xxxx

The STATUS information matches any of the patterns A, B, and C.
(x indicates a bit that may be either 0 or 1.)

If the pattern of the STATUS information is A

(1) The optical cable that connects together the slave corresponding to bits 12 to 15 of the MODE information and the preceding slave may be defective. Or, either of the slaves connected together with that optical cable may be defective.

(2) The voltage of the power supplied to the slave amplifier dropped, or a power fault occurred in the amplifier.

(3) Any of the axis control cards in the CNC may be defective.

If the pattern of the STATUS information is B

(1) The optical cable that connects together the slave corresponding to bits 12 to 15 of the MODE information and the preceding slave may be defective. Or, either of the slaves connected together with that optical cable may be defective.

(2) The voltage of the power supplied to the slave amplifier dropped, or a power fault occurred in the amplifier.

If the pattern of the STATUS information is C

(1) The slave corresponding to bits 12 to 15 of the MODE information may be defective.

(2) The voltage of the power supplied to the slave amplifier dropped, or a power fault occurred in the amplifier.

- **Power fault in a servo amplifier**

If a power fault occurs in a servo amplifier, the FSSB alarm is issued. A power fault occurs, causing the FSSB alarm to be issued, if the amplifier control power supply voltage drops, if the +5 V conductor of the pulse coder cable is ground, or for other reasons.

- **Replacing the axis control card**

If any of the axis control cards are found defective because of the above diagnosis, replace the axis control card on the motherboard (main CPU board).

- **Installation position of the axis control card**

[For the LCD–mounted type]

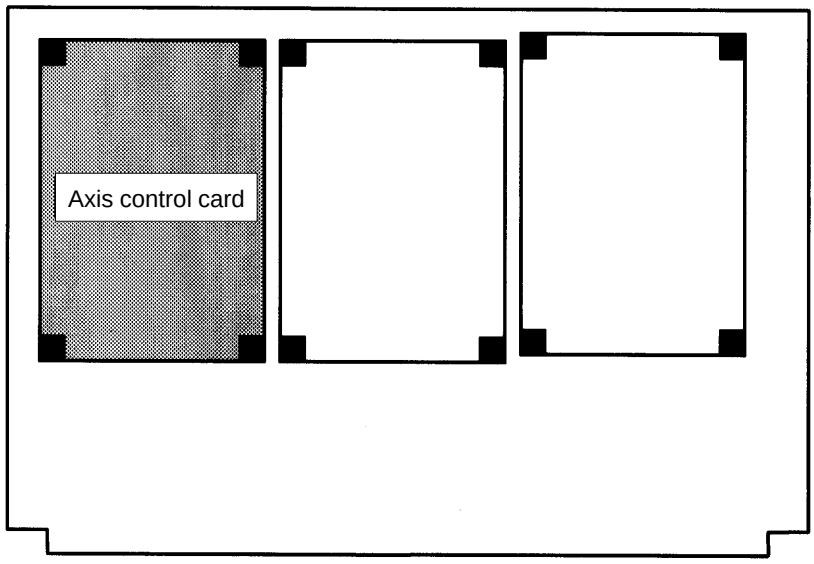

[For the stand–alone type]

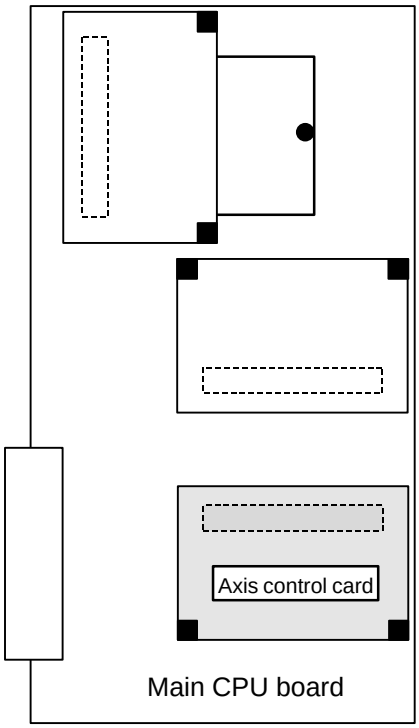

- **FSSB alarm on the sub–CPU board or loader control board**

If alarm 972 is issued, indicating on the screen that an FSSB alarm occurred on the sub–CPU or loader, take appropriate action on the sub–CPU board or loader control board.

Screen display example

```
SYSTEM ALARM

972 NMI OCCURRED IN OTHER MODULE

    SLOT 01
    926 FSSB ALARM <SUB
```

[For the LCD–mounted type]

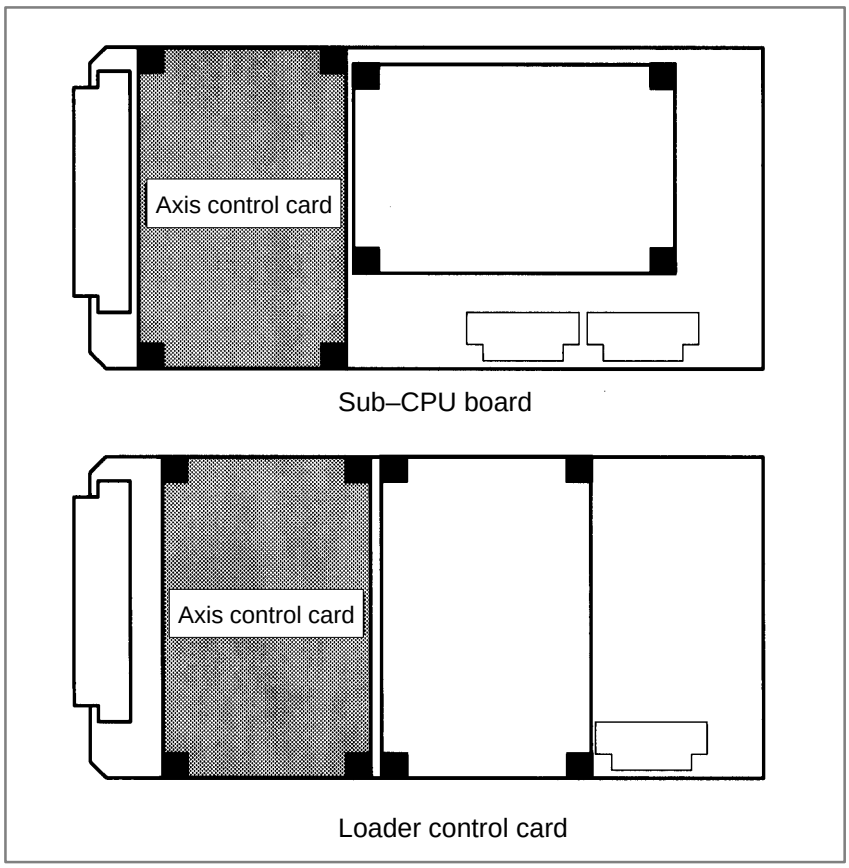

[For the stand–alone type]

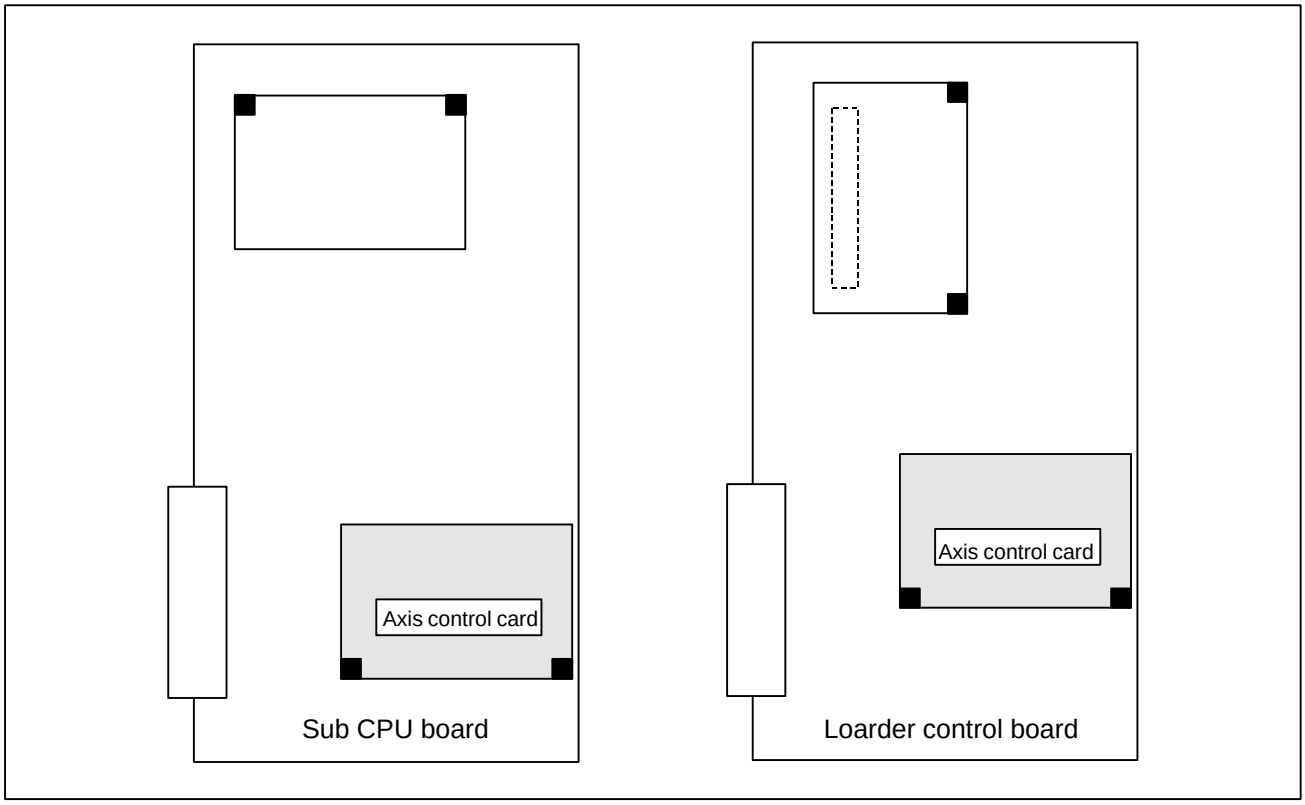

11.31 ALARM 930 (CPU INTERRUPT)

Causes and actions

An interrupt that can never be generated during normal operation was generated.
The cause of the fault cannot be identified, but the fault may have occurred in the peripheral circuit of the CPU.

If the problem is solved by turning the power off and then on again, the problem may be attributable to noise.

- **Replacing the CPU card, motherboard**
- **Installation position of each card**

[For the LCD–mounted type]

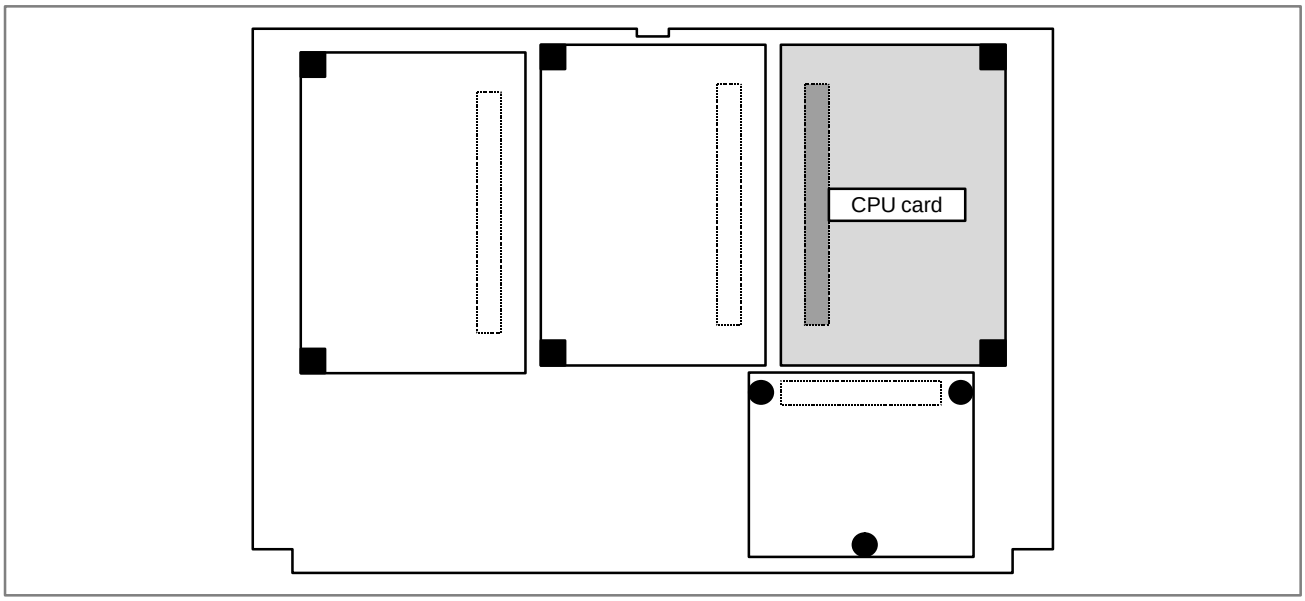

[For the stand–alone type]

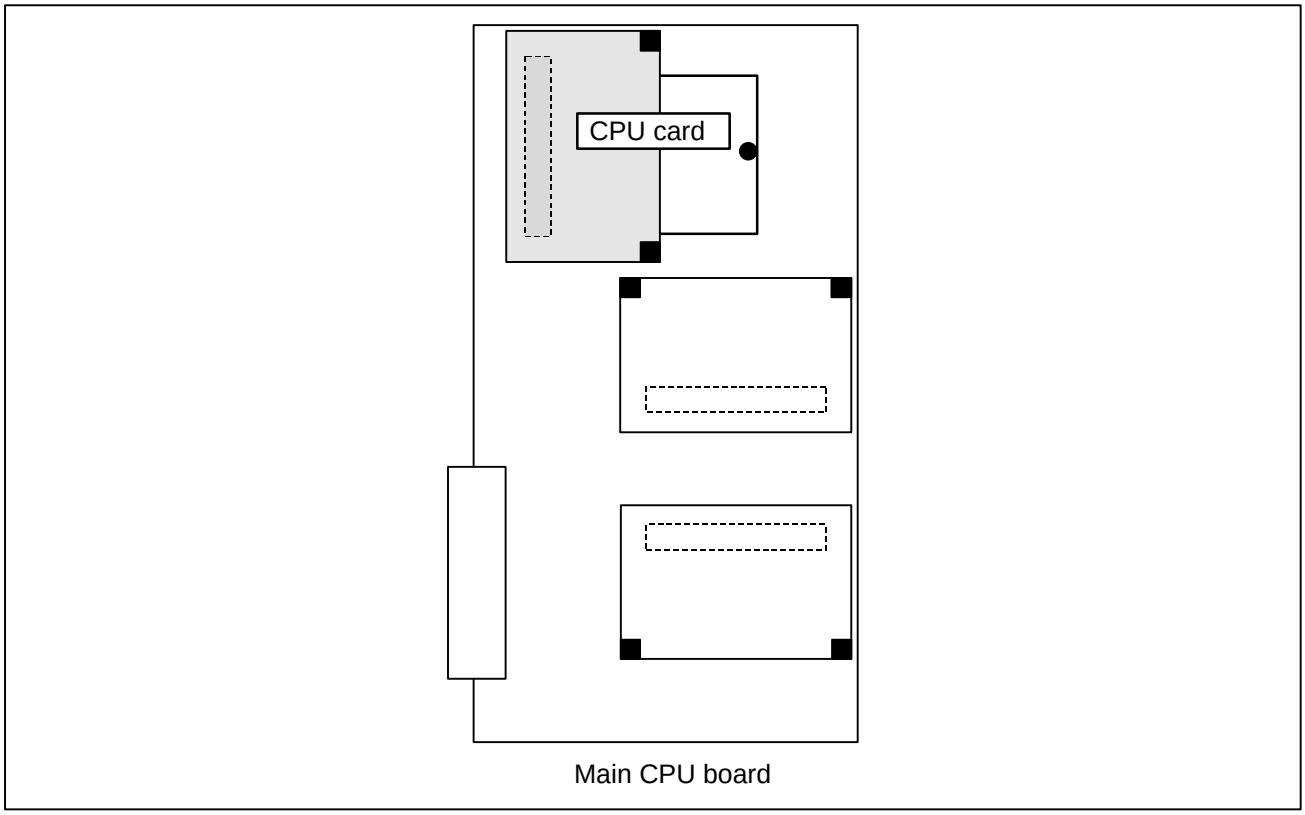

- **Examining the noise environment**

See the section on the measures against noise, examine the noise environment of the CNC.

- **CPU interrupt on an option board**

If alarm 972 is issued, indicating on the screen that a CPU interrupt was generated on an option board, take appropriate action on the option board on which the CPU interrupt was generated.
Some option boards have a circuit equivalent to the CPU card installed on the boards themselves. See the hardware chapter for details.

Screen display example

```
SYSTEM ALARM

972 NMI OCCURRED IN OTHER MODULE

    SLOT 01
    930 CPU INTERRUPT <SUB
```

11.32 ALARM 935 (SRAM ECC ERROR)

Causes and actions

An ECC error occurred in the SRAM used to store data such as parameters and machining programs.

This alarm is issued if the battery has run down or if the data in the SRAM is destroyed due to some external cause. Or, the FROM/SRAM module or motherboard may be defective.

- **ECC check**

  This is the method of checking the data stored in the SRAM. It has been employed instead of the conventional parity check.
  With the ECC check method, 8–bit correction data is provided for 16–bit data, so that if a data error occurs in one of these 16 bits, the error is automatically corrected with the correction data, allowing the CNC to continue operation. This alarm is issued if a data error occurs in two or more bits.
  With the conventional parity check method, a system alarm is issued if a data error occurs even in one bit.

- **Checking the battery**

  The battery is rated 3 V. A battery alarm is issued and “BAT” flashes on the screen if the voltage of the battery drops to 2.6 V.
  If a battery alarm is issued, replace the battery with a new one promptly.

- **Performing memory all clear**

  Perform a memory all clear operation, then start up the CNC. Alternatively, if a backup of the data in the SRAM has been made, use the backup to restore the data. To back up and restore the data in the SRAM, use the boot system.

- **Replacing the FROM/SRAM module**

  If memory all clear or the restoration of the data with a backup does not solve the problem, replace the FROM/SRAM module. Take a backup copy in advance. All the software must be restored after the replacement.
  After replacing the FROM/SRAM module, perform a memory all clear operation and start up the CNC. All the data must be re–loaded.
  If a backup is available, restore the data using the backup, then start up the CNC.

- **Motherboard**

  If any of the above actions does not solve the problem, replace the motherboard.

- **Installation position of the FROM/SRAM module**

[For the LCD–mounted type]

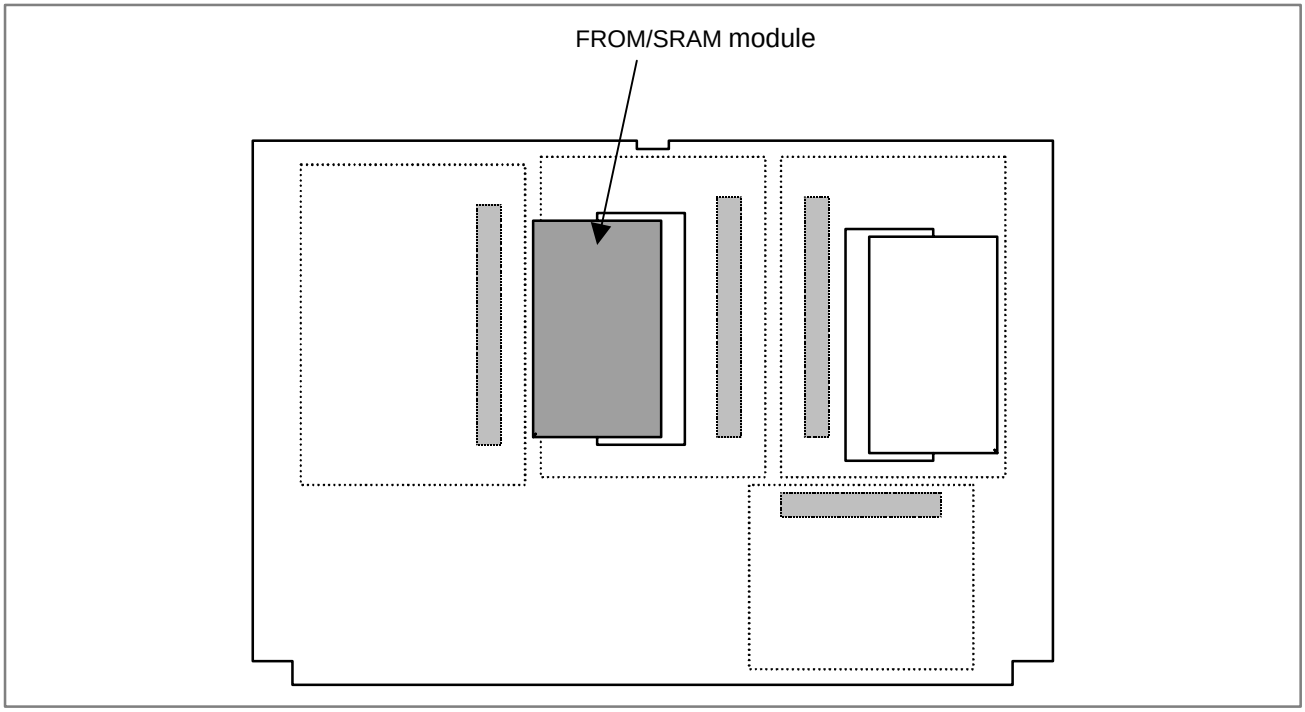

[For the stand–alone type]

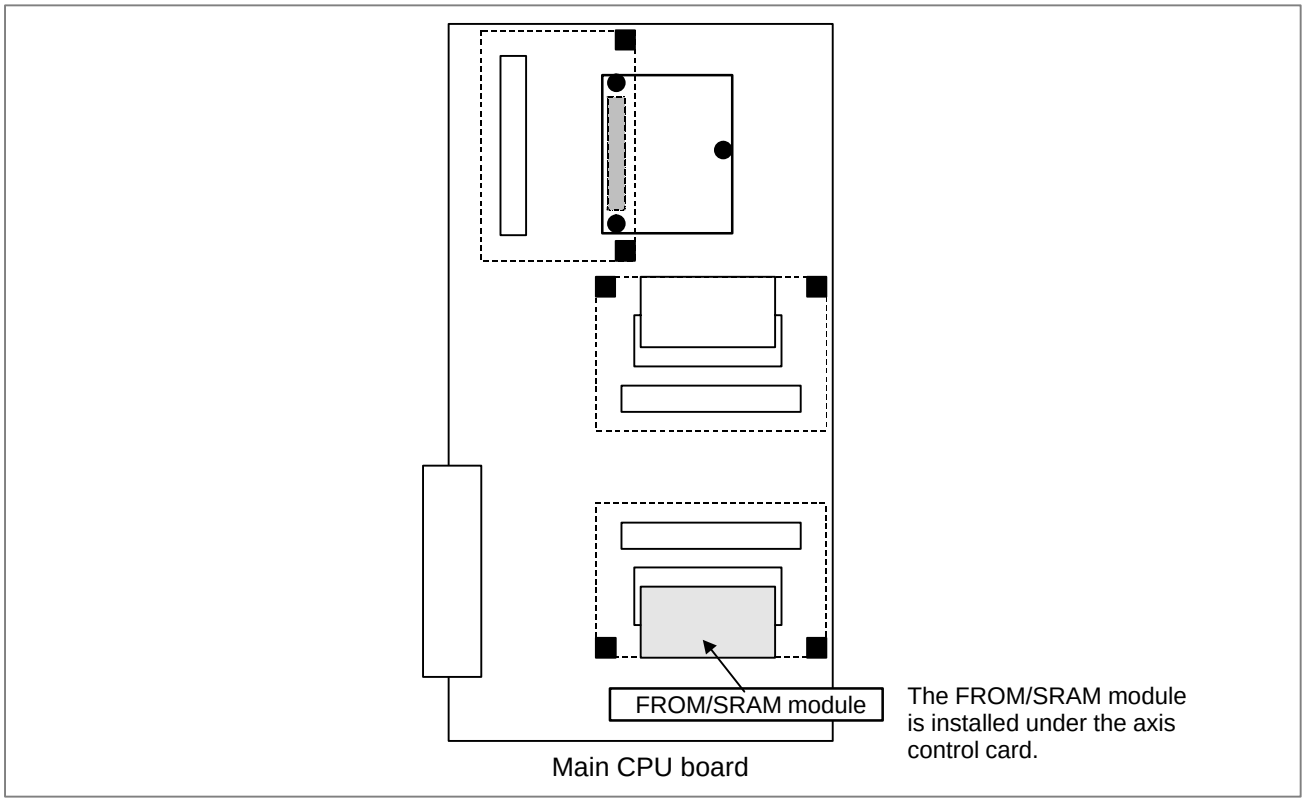

11.33 ALARM 950 (PMC SYSTEM ALARM)

Causes and actions

This alarm is issued if a fault is detected in the PMC.

The probable causes include an I/O link communication error and a defective PMC control circuit

• Connecting the I/O Link

The I/O Link is a serial interface that connects the CNC to various I/O devices and allows transfers of I/O signals between devices at high speed. When multiple devices are connected using the I/O Link, there forms a relationship that a certain device is a master and the other devices are slaves. The states of the input signals from the slaves are transferred to the master at fixed intervals. The output signals from the master are transferred to the slaves at fixed intervals. In a CNC system, the master is the CNC (motherboard or main CPU board).
The I/O signals transferred via the I/O link can be used with the PMC Ladder.

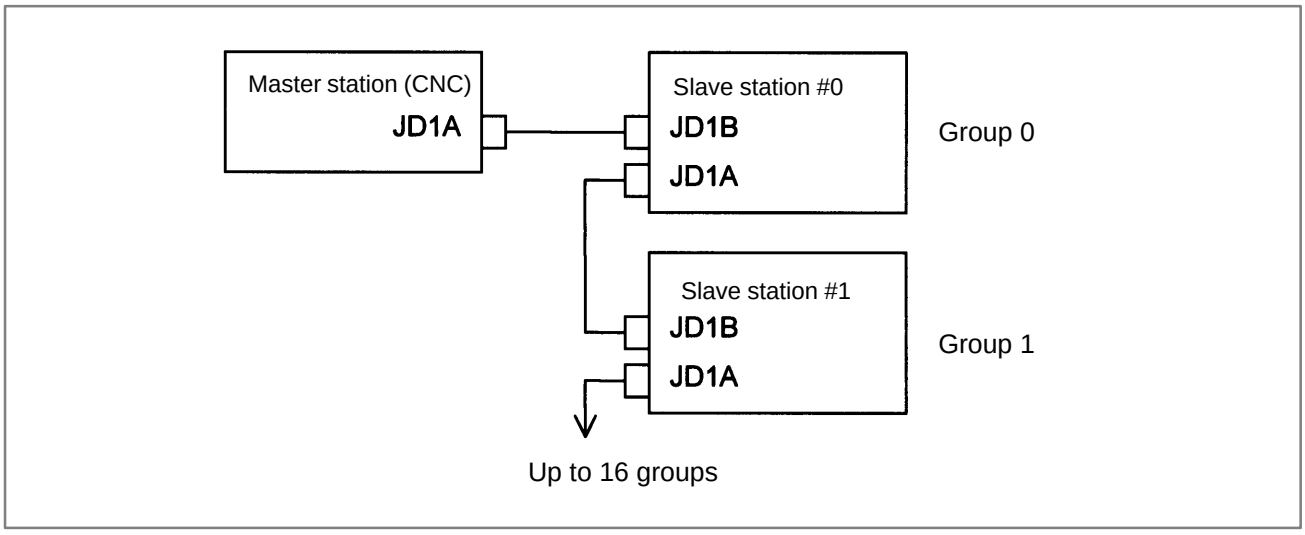

• I/O Link communication error PC050

If alarm 950 is issued, displaying “PC050” on the screen, an I/O link communication error may have occurred.

Screen display example

```
SYSTEM ALARM

950 PMC SYSTEM ALARM
     PC050 I/OLINK(CH1)      xx:yy–aa:bb
     or
     PC050 I/OLINK(CH2)      aa:bb–xx:yy
     or
     PC050 IOLINK CH1        aabb–xxyy:aabb
     or
     PC050 IOLINK CH2        aabb:aabb–xxyy
```

In this screen display example, the cause of the alarm can be estimated using xx:yy. xx and yy are hexadecimal representations. CH1 and CH2 are channels on which communication failed.

1) If bit 0 of the binary representation of xx is “1”, this indicates that the master station (CNC) received invalid communication data. For example, assume that the following is displayed on the screen:

```
SYSTEM ALARM

950 PMC SYSTEM ALARM
    PC050 IOLINK CH1        aabb–4142:aabb
```

xx is equal to 41, or “01000001” in binary notation. Bit 0, which is the lowest (rightmost) bit, is “1”.
In this case, check the following:

(1) Noise environment of the I/O Link cable
Noise may disturb the data on the I/O Link and may result in a problem.

(2) Contact of the I/O Link cable
Check that the I/O link cable is in contact. Check that the cable is not loose and is latched firmly.

(3) Cable failure
Check that the I/O Link cable is connected properly.

(4) Device failure
The motherboard or any of the I/O devices connected to the I/O Link may be defective. Replace the devices, one at a time, to identify the defective device.

Refer to 2) if bit 1 (second bit from the right) is also “1”.

2) If bit 1 of the binary representation of xx is “1”, this indicates that an error was detected on a slave station (I/O device). For example, assume that the following is displayed on the screen:

```
SYSTEM ALARM

950 PMC SYSTEM ALARM
    PC050 IOLINK CH1        aabb–4382:aabb
```

xx is equal to 43, or “01000011” in binary notation. Bit 1 (second bit from the right) is “1”.
In this case, yy indicates the following:

Number equal to the number indicated by bits 0 to 4 of yy minus 1:
Group number of the slave station on which an error was detected

Bit 5 of yy:
Invalid communication data was detected on the slave.

Bit 6 of yy:
Another error was detected on the slave.

Bit 7 of yy:
A watchdog or parity error was detected on the slave.

In the example shown in the figure above, yy is equal to 82, or “10000010” in binary notation. Bits 0 to 4 are “00010” (2 in decimal notation). The number “1”, which is equal to that number minus 1, is the group number of the slave station on which an error was detected. Bit 7 is “1”. Thus, a watchdog or parity error was detected on the slave station in group 1.

In this case, check the following:

(1) If bit 5 of yy is “1”
Perform examination with the same procedure as that in 1).

(2) If bit 6 of yy is “1” or if bit 7 of yy is “1”
First, replace the device of the slave station of the indicated group number.
If the problem is not solved, perform examination with the same procedure as that in 1) to identify the defective location.

3) If bit 2 of the binary representation of xx is “1”, this indicates that the link between the master station (CNC) and the slave station was canceled. For example, assume that the following is displayed on the screen:

```
SYSTEM ALARM

950 PMC SYSTEM ALARM
    PC050 IOLINK CH1        aabb–8400:aabb
```

xx is equal to 84, or “1000100” in binary notation. Bit 2, which is the third bit from the right, is “1”.
In this case, check the following:

(1) Disconnection of the slave station from the power supply
Check that the slave station is not turned off, that there are no instantaneous power failures, and that the capacity of the power supply is enough.

(2) Disconnection of the I/O link cable
Check that the I/O link cable has not fallen off or has not been disconnected.

(3) If the problem is not solved, perform a check with the same procedure as that in 1).

4) If bit 3 or 4 of the binary representation of xx is “1”, this indicates that a parity error occurred in the PMC control circuit on the motherboard. In this case, replace the motherboard (main CPU board).

- **Other cases**

The motherboard may be defective. Replace the motherboard.

- **PMC system alarm on the loader control board**

For sequence control on the loader control board, a PMC control circuit is installed on the loader control board.
If alarm 972 is issued, indicating on the screen that a PMC system alarm occurred on the loader, take appropriate action on the loader control board.

Screen display example

```
SYSTEM ALARM

972 NMI OCCURRED IN OTHER MODULE

    SLOT 01
    950 PMC SYSTEM ALARM >LC
```

11.34 ALARM 951 (PMC WATCHDOG ALARM)

Causes and actions

This alarm is issued if a fault (watchdog alarm) is detected in the PMC. A probable cause is that the MC control circuit is defective.

- **Replacing the motherboard**

The PMC control circuit is installed on the motherboard. Replace the motherboard.

- **PMC watchdog alarm on the loader control board**

For sequence control on the loader control board, a PMC control circuit is installed on the loader control board.
If alarm 972 is issued, indicating on the screen that a PMC watchdog alarm occurred on the loader, take appropriate action on the loader control board.

Screen display example

```
SYSTEM ALARM

972 NMI OCCURRED IN OTHER MODULE

    SLOT 01
    951 PMC WATCH DOG ALARM >LC
```

11.35 ALARM 972 (NMI ALARM ON AN OPTION BOARD)

Causes and actions

This alarm indicates that an error was detected on an option board, not on the main CPU board.

- **Screen display**

If alarm 972 is issued, the following is displayed on the screen:

Screen display example

```
SYSTEM ALARM

972 NMI OCCURRED IN OTHER MODULE

    SLOT 02
    930 CPU INTERRUPT <SUB
```

"SLOT" indicates the number of the slot into which the option board is inserted. Alternatively, it may indicate the number of the alarm that occurred on the option board. Take the action related to that alarm to the option board. In the above example, alarm 930 occurred on the sub–CPU board.

- **Slot number**

The slot number of each option slot is as shown in the figure below.

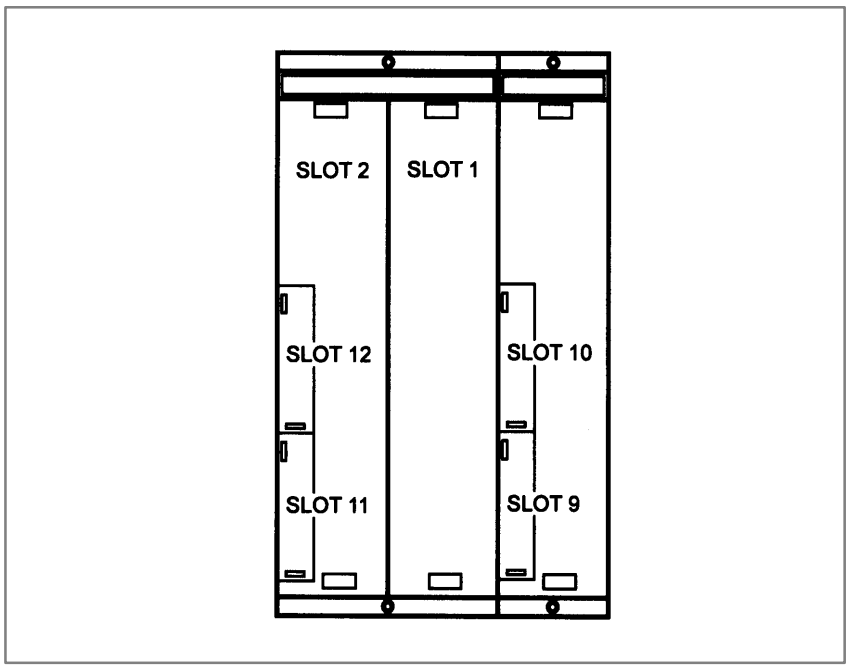

- **Replacing the option board**

Replace the option board inserted into the slot with the indicated slot number.

11.36 ALARM 973 (NMI ALARM WITH AN UNKNOWN CAUSE)

Causes and actions

An error that can never occur during normal operation occurred. The cause of the error cannot be identified.

- **Replacing printed circuit boards**

Replace all the printed circuit boards installed (including cards, modules, and the back panel), one at a time, to identify the defective printed circuit board.
Replace the CPU card, motherboard, and other printed circuit boards, one at a time.

11.37 ALARM 974 (F–BUS ERROR)

Causes and actions

A bus error occurred on the FANUC–BUS connecting each option board.

This alarm indicates that a fault occurred during the exchange of data between the main CPU and an option board.

- **Replacing the CPU card** — Replace the CPU card on the motherboard.
- **Replacing the motherboard** — Replace the motherboard.
- **Replacing the option boards** — Replace the installed option boards, one at a time.
- **Replacing the back panel** — Replace the back panel.

- **Installation position of the CPU card**

[For the LCD–mounted type]

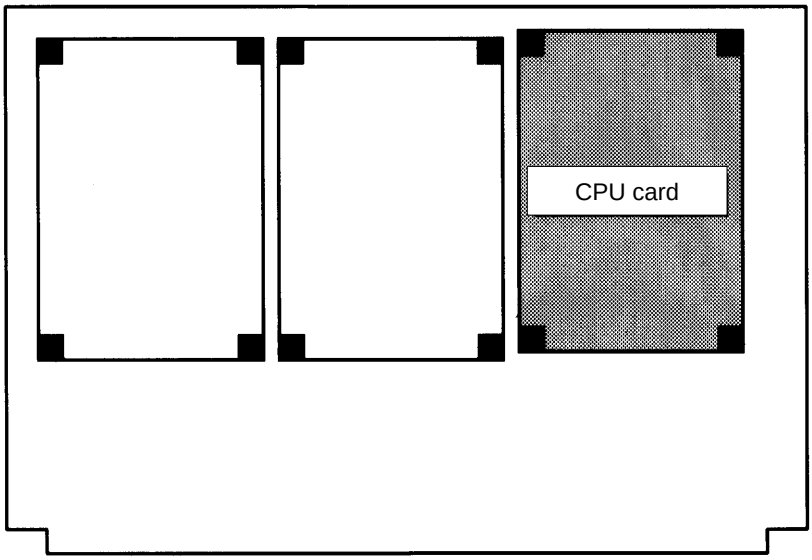

[For the stand–alone type]

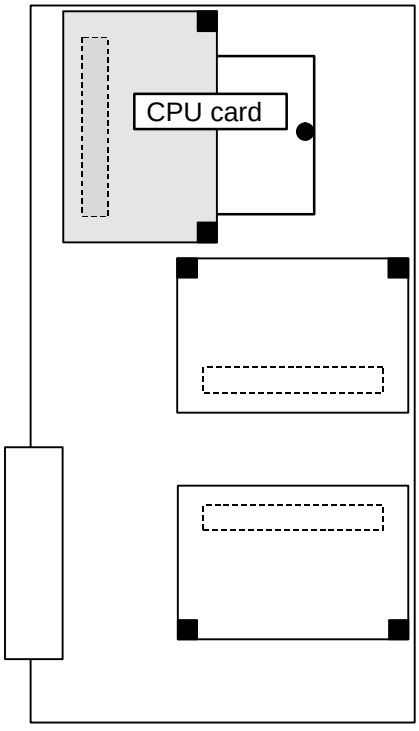

- **F–BUS error on an option board**

If alarm 972 is issued, indicating on the screen that an F–BUS error occurred on an option board, replace the CPU card on the option board on which the F–BUS error occurred or the option board itself.
Some option boards have a circuit equivalent to the CPU card installed on the boards themselves. See the hardware chapter for details.
In this case, the back panel or motherboard may be defective. Take the actions described on the previous page.

Screen display example

```
SYSTEM ALARM

972 NMI OCCURRED IN OTHER MODULE

    SLOT 01
    974 F-BUS ERROR <SUB
```

11.38 ALARM 975 (BUS ERROR)

Causes and actions

A bus error occurred on the motherboard. This alarm indicates that an error occurred during the exchange of data within the motherboard.

- **Replacing the CPU card**

  Replace the CPU card on the motherboard.

- **Replacing other cards and modules**

  Replace the display control card, axis control cards, and FROM/SRAM module, one at time.

- **Replacing the motherboard**

  Replace the motherboard.

- **BUS error on an option board**

  If alarm 972 is issued, indicating on the screen that a BUS error occurred on an option board, replace the CPU card on the option card, DRAM module, axis control cards, and option card, one at a time.
  Some option boards have a circuit equivalent to the CPU card installed on the boards themselves. See the hardware chapter for details.

  Screen display example

```
SYSTEM ALARM

972 NMI OCCURRED IN OTHER MODULE

    SLOT 01
    975 F-BUS ERROR <SUB
```

11.39 ALARM 976 (LOCAL BUS ERROR)

Causes and actions

A bus error occurred on the local bus on the motherboard.

This alarm indicates that an error occurred during the exchange of data within the motherboard.

- **Replacing the CPU card**

  Replace the CPU card on the motherboard (main CPU board).

- **Replacing other cards and modules**

  Replace the display control card, axis control cards, and FROM/SRAM module, one at a time.

- **Replacing the motherboard**

  Replace the motherboard.

- **Local BUS error on an option board**

  If alarm 972 is issued, indicating on the screen that a local BUS error occurred on an option board, replace the CPU card on the option card, DRAM module, axis control cards, and option card, one at a time.
  Some option boards have a circuit equivalent to the CPU card installed on the boards themselves. See the hardware chapter for details.

  Screen display example

```
SYSTEM ALARM

972 NMI OCCURRED IN OTHER MODULE

    SLOT 01
    976 L-BUS ERROR <SUB
```

11.40 SERVO ALARMS

For an explanation of the following servo alarms, refer to the FANUC SERVO MOTOR α*i* series Maintenance Manual (B–65285EN) or FANUC SERVO MOTOR α series Maintenance Manual (B–65165E).

Number	Message	Contents
417	SERVO ALARM: n–TH AXIS – PARAMETER INCORRECT	This alarm occurs when the n–th axis (axis 1–8) is in one of the conditions listed below. (Digital servo system alarm) 1) The value set in Parameter No. 2020 (motor form) is out of the specified limit. 2) A proper value (111 or –111) is not set in parameter No.2022 (motor revolution direction). 3) Illegal data (a value below 0, etc.) was set in parameter No. 2023 (number of speed feedback pulses per motor revolution). 4) Illegal data (a value below 0, etc.) was set in parameter No. 2024 (number of position feedback pulses per motor revolution). 5) Parameters No. 2084 and No. 2085 (flexible field gear rate) have not been set. 6) A value outside the limit of {1 to the number of control axes} or a non–continuous value (Parameter 1023 (servo axis number) contains a value out of the range from 1 to the number of axes, or an isolated value (for example, 4 not prceded by 3).was set in parameter No. 1023 (servo axisnumber).
420	SERVO ALARM: n AXIS SYNC TORQUE	During simple synchronous control, the difference between the torque commands for the master and slave axes exceeded the value set in parameter No. 2031.
421	SERVO ALARM: n AXIS EXCESS ER (D)	The difference between the errors in the semi–closed loop and closed loop has become excessive during dual position feedback. Check the values of the dual position conversion coefficients in parameters No. 2078 and 2079.
422	SERVO ALARM: n AXIS	In torque control of PMC axis control, a specified allowable speed has been exceeded.
423	SERVO ALARM: n AXIS	In torque control of PMC axis control, the parameter–set allowable cumulative travel distance has been exceeded.
430	n AXIS : SV. MOTOR OVERHEAT	A servo motor overheat occurred.
431	n AXIS : CNV. OVERLOAD	1) PSM: Overheat occurred. 2) β series SVU: Overheat occurred.
432	n AXIS : CNV. LOWVOLT CON.	1) PSM: The control power supply voltage has dropped. 2) PSMR: The control power supply voltage has dropped. 3) β series SVU: The control power supply voltage has dropped.
433	n AXIS : CNV. LOWVOLT DC LINK	1) PSM: The DC link voltage has dropped. 2) PSMR: The DC link voltage has dropped. 3) α series SVU: The DC link voltage has dropped. 4) β series SVU: The DC link voltage has dropped.
434	n AXIS : INV. LOWVOLT CONTROL	SVM: The control power supply voltage has dropped.
435	n AXIS : INV. LOWVOLT DC LINK	SVM: The DC link voltage has dropped.
436	n AXIS : SOFTTHERMAL (OVC)	The digital servo software detected the soft thermal state (OVC).
437	n AXIS : CNV. OVERCURRENT POWER	PSM: Overcurrent flowed into the input circuit.
438	n AXIS : INV. ABNORMAL CURRENT	1) SVM: The motor current is too high. 2) α series SVU: The motor current is too high. 3) β series SVU: The motor current is too high.

Number	Message	Contents
439	n AXIS : CNV. OVERVOLT POWER	1) PSM: The DC link voltage is too high. 2) PSMR: The DC link voltage is too high. 3) α series SVU: The C link voltage is too high. 4) β series SVU: The link voltage is too high.
440	n AXIS : CNV. EX DECELERATION POW.	1) PSMR: The regenerative discharge amount is too large. 2) α series SVU: The regenerative discharge amount is too large. Alternatively, the regenerative discharge circuit is abnormal.
441	n AXIS : ABNORMAL CURRENT OFFSET	The digital servo software detected an abnormality in the motor current detection circuit.
442	n AXIS : CNV. CHARGE FAULT	1) PSM: The spare discharge circuit of the DC link is abnormal. 2) PSMR: The spare discharge circuit of the DC link is abnormal.
443	n AXIS : CNV. COOLING FAN FAILURE	1) PSM: The internal stirring fan failed. 2) PSMR: The internal stirring fan failed. 3) β series SVU: The internal stirring fan failed.
444	n AXIS : INV. COOLING FAN FAILURE	SVM: The internal stirring fan failed.
445	n AXIS : SOFT DISCONNECT ALARM	The digital servo software detected a broken wire in the pulse coder.
446	n AXIS : HARD DISCONNECT ALARM	A broken wire in the built–in pulse coder was detected by hardware.
447	n AXIS : HARD DISCONNECT (EXT)	A broken wire in the separate detector was detected by hardware.
448	n AXIS : UNMATCHED FEEDBACK ALARM	The sign of feedback data from the built–in pulse coder differs from that of feedback data from the separate detector.
449	n AXIS : INV. IPM ALARM	1) SVM: IPM (intelligent power module) detected an alarm. 2) α series SVU: IPM (intelligent power module) detected an alarm.
453	n AXIS : SPC SOFT DISCONNECT ALARM	Software disconnection alarm of the α pulse coder. Turn off the power to the CNC, then remove and insert the pulse coder cable. If this alarm is issued again, replace the pulse coder.
456	ILLEGAL CURRENT LOOP	The current control cycle settings (parameter No. 2004, bit 0 of parameter No. 2003, and bit 0 of parameter No. 2013) are incorrect. Possible problems are as follows. – For the two axes whose servo axis numbers (settings of parameter No. 1023) are an odd number followed by an even number (a pair of axes 1 and 2 or axes 5 and 6, for example), a different current control cycle is set for each of the axes. – The requirements for slaves needed for the set current control cycle, including the number, type, and connection method of them, are not satisfied.
457	ILLEGAL HI HRV (250US)	Use of high–speed HRV is specified although the current control cycle is 200 μs.
458	CURRENT LOOP ERROR	The current control cycle setting does not match the actual current control cycle.
459	HI HRV SETTING ERROR	For the two axes whose servo axis numbers (settings of parameter No. 1023) are an odd number followed by an even number (a pair of axes 1 and 2 or axes 5 and 6, for example), the SVM for one of the axes supports high–speed HRV control but the SVM for the other does not. Refer to the SVM specification.

Number	Message	Contents
460	n AXIS : FSSB DISCONNECT	FSSB communication was disconnected suddenly. The possible causes are as follows: 1) The FSSB communication cable was disconnected or broken. 2) The power to the amplifier was turned off suddenly. 3) A low–voltage alarm was issued by the amplifier.
461	n AXIS : ILLEGAL AMP INTERFACE	The axes of the 2–axis amplifier were assigned to the fast type interface.
462	n AXIS : SEND CNC DATA FAILED	Because of an FSSB communication error, a slave could not receive correct data.
463	n AXIS : SEND SLAVE DATA FAILED	Because of an FSSB communication error, the servo system could not receive correct data.
464	n AXIS : WRITE ID DATA FAILED	An attempt was made to write maintenance information on the amplifier maintenance screen, but it failed.
465	n AXIS : READ ID DATA FAILED	At power–up, amplifier initial ID information could not be read.
466	n AXIS : MOTOR/AMP COMBINATION	The maximum current rating for the amplifier does not match that for the motor.
467	n AXIS : ILLEGAL SETTING OF AXIS	The servo function for the following has not been enabled when an axis occupying a single DSP (corresponding to two ordinary axes) is specified on the axis setting screen. 1. Learning control (bit 5 of parameter No. 2008 = 1) 2. High–speed current loop (bit 0 of parameter No. 2004 = 1) 3. High–speed interface axis (bit 4 of parameter No. 2005 = 1)
468	HI HRV SETTING ERROR (AMP)	Use of high–speed HRV is specified for a controlled axis of an amplifier which does not support high–speed HRV.
600	n AXIS : INV. DC LINK OVER CURRENT	DC link current is too large.
601	n AXIS : INV. RADIATOR FAN FAILURE	The external dissipator stirring fan failed.
602	n AXIS : INV. OVERHEAT	The servo amplifier was overheated.
603	n AXIS : INV. IPM ALARM (OH)	The IPM (intelligent power module) detected an overheat alarm.
604	n AXIS : AMP. COMMUNICATION ERROR	Communication between the SVM and the PSM failed.
605	n AXIS : CNV. EX. DISCHARGE POW.	PSMR: Regenerative power is too large.
606	n AXIS : CNV. RADIATOR FAN FAILURE	PSM: The external dissipator stirring fan failed. PSMR: The external dissipator stirring fan failed.
607	n AXIS : CNV. SINGLE PHASE FAILURE	PSM: Input voltage is in the open–phase condition. PSMR: Input voltage is in the open–phase condition.

If the hardware on the CNC is suspected to be defective as a result of examination, replace the axis control cards.

- **Installation positions of the axis control cards**

[For the LCD–mounted type]

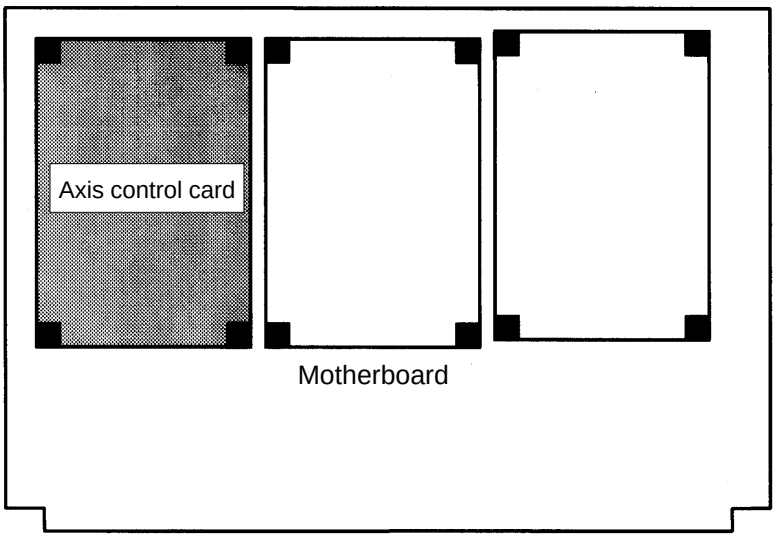

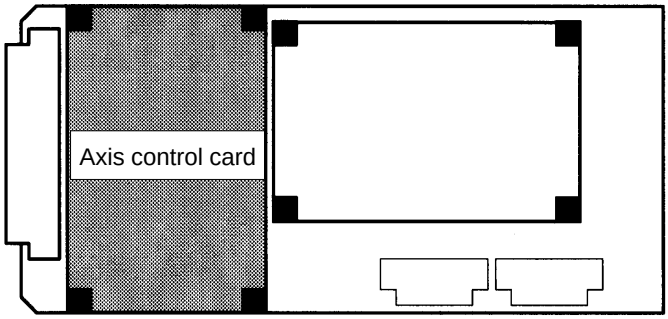

Sub–CPU board

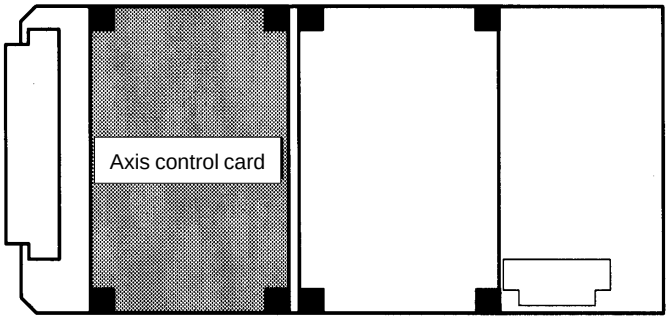

Loader control card

[For the stand–alone type]

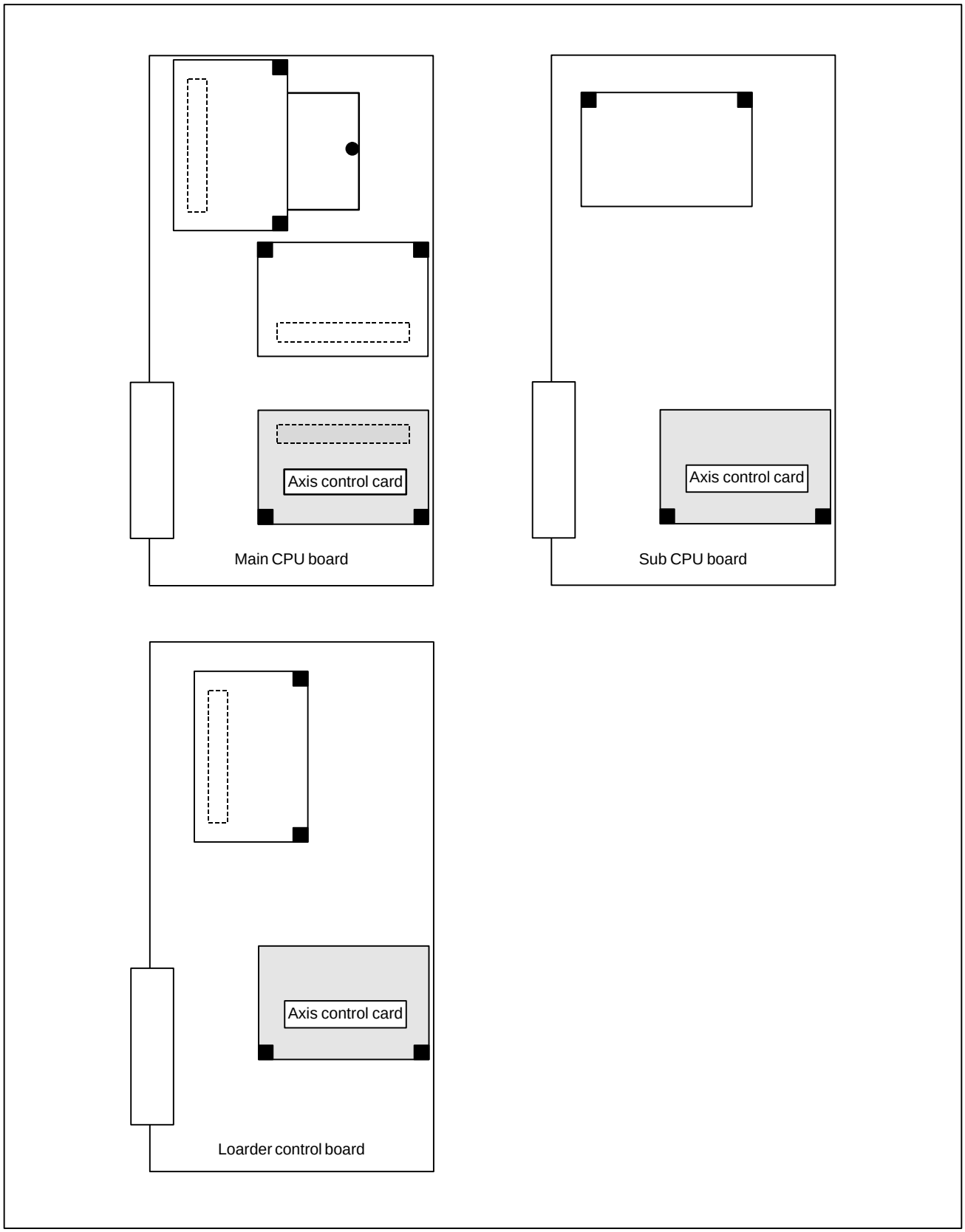

11.41 SPC ALARMS

For an explanation of the following SPC alarms (serial pulse coder alarms), refer to the FANUC SERVO MOTOR α*i* series Maintenance Manual (B–65285EN) or FANUC SERVO MOTOR α series Maintenance Manual (B–65165E).

Number	Message	Contents
360	n AXIS: ABNORMAL CHECKSUM (INT)	A checksum error occurred in the built–in pulse coder.
361	n AXIS: ABNORMAL PHASE DATA (INT)	A phase data error occurred in the built–in pulse coder.
364	n AXIS: SOFT PHASE ALARM (INT)	The digital servo software detected invalid data in the built–in pulse coder.
365	n AXIS: BROKEN LED (INT)	An LED error occurred in the built–in pulse coder.
366	n AXIS: PULSE MISS (INT)	A pulse error occurred in the built–in pulse coder.
367	n AXIS: COUNT MISS (INT)	A count error occurred in the built–in pulse coder.
368	n AXIS: SERIAL DATA ERROR (INT)	Communication data from the built–in pulse coder cannot be received.
369	n AXIS: DATA TRANS. ERROR (INT)	A CRC or stop bit error occurred in the communication data being received from the built–in pulse coder.
380	n AXIS: BROKEN LED (EXT)	An LED error occured in the separate detector.
381	n AXIS: ABNORMAL PHASE (EXT LIN)	A phase data error occurred in the separate linear scale.
382	n AXIS: COUNT MISS (EXT)	A pulse error occurred in the separate detector.
383	n AXIS: PULSE MISS (EXT)	A count error occurred in the separate detector.
384	n AXIS: SOFT PHASE ALARM (EXT)	The digital servo software detected invalid data in the separate detector.
385	n AXIS: SERIAL DATA ERROR (EXT)	Communication data from the separate detector cannot be received.
386	n AXIS: DATA TRANS. ERROR (EXT)	A CRC or stop bit error occurred in the communication data being received from the separate detector.
387	n AXIS: ABNORMAL ENCODER (EXT)	An error occurs in the separate detector. For details, contact the manufacturer of the scale.

11.42 SPINDLE ALARMS

For an explanation of the following spindle alarms, refer to the FANUC SERVO MOTOR α*i* series Maintenance Manual (B–65285EN) or FANUC SERVO MOTOR α series Maintenance Manual (B–65165E).

Number	Contents
7101 to 7199	Spindle 1 alarm (SPM display 01 to 99)
7201 to 7299	Spindle 2 alarm (SPM display 01 to 99)
7301 to 7399	Spindle 3 alarm (SPM display 01 to 99)
7401 to 7499	Spindle 4 alarm (SPM display 01 to 99)

Number	Contents
9001 to later: Spindle_n	n–th spindle alarm (SPM display 01 or larger)

APPENDIX

A ALARM LIST

A.1 LIST OF ALARM CODES (CNC) 836
A.2 LIST OF ALARMS (PMC) 875
A.3 ALARM LIST (SERIAL SPINDLE) 900
A.4 ERROR CODES (SERIAL SPINDLE) 912

A.1 LIST OF ALARM CODES (CNC)

(1) Program errors /Alarms on program and operation (P/S alarm)

Number	Message	Contents
000	PLEASE TURN OFF POWER	A parameter which requires the power off was input, turn off power.
001	TH PARITY ALARM	TH alarm (A character with incorrect parity was input). Correct the tape.
002	TV PARITY ALARM	TV alarm (The number of characters in a block is odd). This alarm will be generated only when the TV check is effective.
003	TOO MANY DIGITS	Data exceeding the maximum allowable number of digits was input. (Refer to the item of max. programmable dimensions.)
004	ADDRESS NOT FOUND	A numeral or the sign " – " was input without an address at the beginning of a block. Modify the program .
005	NO DATA AFTER ADDRESS	The address was not followed by the appropriate data but was followed by another address or EOB code. Modify the program.
006	ILLEGAL USE OF NEGATIVE SIGN	Sign " – " input error (Sign " – " was input after an address with which it cannot be used. Or two or more " – " signs were input.) Modify the program.
007	ILLEGAL USE OF DECIMAL POINT	Decimal point " . " input error (A decimal point was input after an address with which it can not be used. Or two decimal points were input.) Modify the program.
009	ILLEGAL ADDRESS INPUT	Unusable character was input in significant area. Modify the program.
010	IMPROPER G–CODE	An unusable G code or G code corresponding to the function not provided is specified. Modify the program.
011	NO FEEDRATE COMMANDED	Feedrate was not commanded to a cutting feed or the feedrate was inadequate. Modify the program.
014	CAN NOT COMMAND G95 (M series)	A synchronous feed is specified without the option for threading / synchronous feed.
	ILLEGAL LEAD COMMAND (T series)	In variable lead threading, the lead incremental and decremental outputted by address K exceed the maximum command value or a command such that the lead becomes a negative value is given. Modify the program.
015	TOO MANY AXES COMMANDED (M series)	An attempt was made to move the machine along the axes, but the number of the axes exceeded the specified number of axes controlled simultaneously. Modify the program.
	TOO MANY AXES COMMANDED (T series)	An attempt has been made to move the tool along more than the maximum number of simultaneously controlled axes. Alternatively, no axis movement command or an axis movement command for two or more axes has been specified in the block containing the command for skip using the torque limit signal (G31 P99/98). The command must be accompanied with an axis movement command for a single axis, in the same block.
020	OVER TOLERANCE OF RADIUS	In circular interpolation (G02 or G03), difference of the distance between the start point and the center of an arc and that between the end point and the center of the arc exceeded the value specified in parameter No. 3410.
021	ILLEGAL PLANE AXIS COMMANDED	An axis not included in the selected plane (by using G17, G18, G19) was commanded in circular interpolation. Modify the program.
022	NO CIRCLE RADIUS	The command for circular interpolation lacks arc radius R or coordinate I, J, or K of the distance between the start point to the center of the arc.

Number	Message	Contents
023	ILLEGAL RADIUS COMMAND (T series)	In circular interpolation by radius designation, negative value was commanded for address R. Modify the program.
025	CANNOT COMMAND F0 IN G02/G03 (M series)	F0 (fast feed) was instructed by F1 –digit column feed in circular interpolation. Modify the program.
027	NO AXES COMMANDED IN G43/G44 (M series)	No axis is specified in G43 and G44 blocks for the tool length offset type C. Offset is not canceled but another axis is offset for the tool length offset type C. Modify the program.
028	ILLEGAL PLANE SELECT	In the plane selection command, two or more axes in the same direction are commanded. Modify the program.
029	ILLEGAL OFFSET VALUE (M series)	The offset values specified by H code is too large. Modify the program.
	ILLEGAL OFFSET VALUE (T series)	The offset values specified by T code is too large. Modify the program.
030	ILLEGAL OFFSET NUMBER (M series)	The offset number specified by D/H code for tool length offset, cutter compensation, or three–dimensional tool offset is too large. Alternatively, the number of an additional workpiece coordinate system specified with the P code is too large. Modify the program.
	ILLEGAL OFFSET NUMBER (T series)	The offset number in T function specified for tool offset is tool large. Modify the program.
031	ILLEGAL P COMMAND IN G10	In setting an offset amount by G10, the offset number following address P was excessive or it was not specified. Modify the program.
032	ILLEGAL OFFSET VALUE IN G10	In setting an offset amount by G10 or in writing an offset amount by system variables, the offset amount was excessive.
033	NO SOLUTION AT CRC (M series)	A point of intersection cannot be determined for cutter compensation. Modify the program.
	NO SOLUTION AT CRC (T series)	A point of intersection cannot be determined for tool nose radius compensation. Modify the program.
034	NO CIRC ALLOWED IN ST–UP /EXT BLK (M series)	The start up or cancel was going to be performed in the G02 or G03 mode in cutter compensation C. Modify the program.
	NO CIRC ALLOWED IN ST–UP /EXT BLK (T series)	The start up or cancel was going to be performed in the G02 or G03 mode in tool nose radius compensation. Modify the program.
035	CAN NOT COMMANDED G39 (M series)	G39 is commanded in cutter compensation B cancel mode or on the plane other than offset plane. Modify the program.
	CAN NOT COMMANDED G31 (T series)	Skip cutting (G31) was specified in tool nose radius compensation mode. Modify the program.
036	CAN NOT COMMANDED G31 (M series)	Skip cutting (G31) was specified in cutter compensation mode. Modify the program.
037	CAN NOT CHANGE PLANE IN CRC (M seires)	G40 is commanded on the plane other than offset plane in cutter compensation B. The plane selected by using G17, G18 or G19 is changed in cutter compensation C mode. Modify the program.
	CAN NOT CHANGE PLANE IN NRC (T seires)	The offset plane is switched in tool nose radius compensation. Modify the program.
038	INTERFERENCE IN CIRCULAR BLOCK (M seires)	Overcutting will occur in cutter compensation C because the arc start point or end point coincides with the arc center. Modify the program.
	INTERFERENCE IN CIRCULAR BLOCK (T series)	Overcutting will occur in tool nose radius compensation because the arc start point or end point coincides with the arc center. Modify the program.

Number	Message	Contents
039	CHF/CNR NOT ALLOWED IN NRC (T series)	Chamfering or corner R was specified with a start–up, a cancel, or switching between G41 and G42 in tool nose radius compensation. The program may cause overcutting to occur in chamfering or corner R. Modify the program.
040	INTERFERENCE IN G90/G94 BLOCK (T series)	Overcutting will occur in tool nose radius compensation in canned cycle G90 or G94. Modify the program.
041	INTERFERENCE IN CRC (M seires)	Overcutting will occur in cutter compensation C. Two or more blocks are consecutively specified in which functions such as the auxiliary function and dwell functions are performed without movement in the cutter compensation mode. Modify the program.
	INTERFERENCE IN NRC (T seires)	Overcutting will occur in tool nose radius compensation. Modify the program.
042	G45/G48 NOT ALLOWED IN CRC (M series)	Tool offset (G45 to G48) is commanded in cutter compensation. Modify the program.
044	G27–G30 NOT ALLOWED IN FIXED CYC (M series)	One of G27 to G30 is commanded in canned cycle mode. Modify the program.
045	ADDRESS Q NOT FOUND (G73/G83) (M series)	In canned cycle G73/G83, the depth of each cut (Q) is not specified. Alternatively, Q0 is specified. Correct the program.
046	ILLEGAL REFERENCE RETURN COMMAND	Other than P2, P3 and P4 are commanded for 2nd, 3rd and 4th reference position return command.
047	ILLEGAL AXIS SELECT	Two or more parallel axes (in parallel with a basic axis) have been specified upon start–up of three–dimensional tool compensation or three–dimensional coordinate conversion.
048	BASIC 3 AXIS NOT FOUND	Start–up of three–dimensional tool compensation or three–dimensional coordinate conversion has been attempted, but the three basic axes used when Xp, Yp, or Zp is omitted are not set in parameter No. 1022.
049	ILLEGAL OPERATION (G68/G69) (M series)	The commands for three–dimensional coordinate conversion (G68, G69) and tool length compensation (G43, G44, G45) are not nested. Modify the program.
050	CHF/CNR NOT ALLOWED IN THRD BLK (M series)	Optional chamfering or corner R is commanded in the thread cutting block. Modify the program.
	CHF/CNR NOT ALLOWED IN THRD BLK(T series)	Chamfering or corner R is commanded in the thread cutting block. Modify the program.
051	MISSING MOVE AFTER CHF/CNR (M series)	Improper movement or the move distance was specified in the block next to the optional chamfering or corner R block. Modify the program.
	MISSING MOVE AFTER CHF/CNR (T series)	Improper movement or the move distance was specified in the block next to the chamfering or corner R block. Modify the program.
052	CODE IS NOT G01 AFTER CHF/CNR (M series)	The block next to the chamfering or corner R block is not G01,G02 or G03. Modify the program.
	CODE IS NOT G01 AFTER CHF/CNR (T series)	The block next to the chamfering or corner R block is not G01. Modify the program.
053	TOO MANY ADDRESS COMMANDS (M series)	For systems without the arbitary angle chamfering or corner R cutting, a comma was specified. For systems with this feature, a comma was followed by something other than R or C Correct the program.
	TOO MANY ADDRESS COMMANDS (T seires)	In the chamfering and corner R commands, two or more of I, K and R are specified. Otherwise, the character after a comma(“,”) is not C or R in direct drawing dimensions programming. Modify the program.
054	NO TAPER ALLOWED AFTER CHF/CNR (T series)	A block in which chamfering in the specified angle or the corner R was specified includes a taper command. Modify the program.

Number	Message	Contents
055	MISSING MOVE VALUE IN CHF/CNR (M series)	In the arbitrary angle chamfering or corner R block, the move distance is less than chamfer or corner R amount.
	MISSING MOVE VALUE IN CHF/CNR (T series)	In chamfering or corner R block, the move distance is less than chamfer or corner R amount.
056	NO END POINT & ANGLE IN CHF/ CNR (T series)	Neither the end point nor angle is specified in the command for the block next to that for which only the angle is specified (A). In the chamfering comman, I(K) is commanded for the X(Z) axis.
057	NO SOLUTION OF BLOCK END (T series)	Block end point is not calculated correctly in direct dimension drawing programming.
058	END POINT NOT FOUND (M series)	In a arbitrary angle chamfering or corner R cutting block, a specified axis is not in the selected plane. Correct the program.
	END POINT NOT FOUND (T series)	Block end point is not found in direct dimension drawing programming.
059	PROGRAM NUMBER NOT FOUND	In an external program number search, a specified program number was not found. Otherwise, a program specified for searching is being edited in background processing. Alternatively, the program with the program number specified in a one–touch macro call is not found in memory. Check the program number and external signal. Or discontinue the background eiting.
060	SEQUENCE NUMBER NOT FOUND	Commanded sequence number was not found in the sequence number search. Check the sequence number.
061	ADDRESS P/Q NOT FOUND IN G70–G73 (T series)	Address P or Q is not specified in G70, G71, G72, or G73 command. Modify the program.
062	ILLEGAL COMMAND IN G71–G76 (T series)	1. The depth of cut in G71 or G72 is zero or negative value. 2. The repetitive count in G73 is zero or negative value. 3. the negative value is specified to Δi or Δk is zero in G74 or G75. 4. A value other than zero is specified to address U or W though Δi or Δk is zero in G74 or G75. 5. A negative value is specified to Δd, thoughthe relief direction in G74 or G75 is determined. 6. Zero or a negative value is specified to the height of thread or depth of cut of first time in G76. 7. The specified minimum depth of cut in G76 is greater than the height of thread. 8. An unusable angle of tool tip is specified in G76. Modify the program.
063	SEQUENCE NUMBER NOT FOUND (T series)	The sequence number specified by address P in G70, G71, G72, or G73 command cannot be searched. Modify the program.
064	SHAPE PROGRAM NOT MONOTONOUSLY (T series)	A target shape which cannot be made by monotonic machining was specified in a repetitive canned cycle (G71 or G72).
065	ILLEGAL COMMAND IN G71–G73 (T series)	1. G00 or G01 is not commanded at the block with the sequence number which is specified by address P in G71, G72, or G73 command. 2. Address Z(W) or X(U) was commanded in the block with a sequence number which is specified by address P in G71 or G72, respectively. Modify the program.
066	IMPROPER G–CODE IN G71–G73 (T series)	An unallowable G code was commanded beween two blocks specified by address P in G71, G72, or G73. Modify the program.
067	CAN NOT ERROR IN MDI MODE (T series)	G70, G71, G72, or G73 command with address P and Q. Modify the program.

Number	Message	Contents
069	FORMAT ERROR IN G70–G73 (T series)	The final move command in the blocks specified by P and Q of G70, G71, G72, and G73 ended with chamfering or corner R. Modify the program.
070	NO PROGRAM SPACE IN MEMORY	The memory area is insufficient. Delete any unnecessary programs, then retry.
071	DATA NOT FOUND	The address to be searched was not found. Or the program with specified program number was not found in program number search. Check the data.
072	TOO MANY PROGRAMS	The number of programs to be stored exceeded 63 (basic), 125 (option), 200 (option), 400 (option) or 1000 (option). Delete unnecessary programs and execute program registeration again.
073	PROGRAM NUMBER ALREADY IN USE	The commanded program number has already been used. Change the program number or delete unnecessary programs and execute program registeration again.
074	ILLEGAL PROGRAM NUMBER	The program number is other than 1 to 9999. Modify the program number.
075	PROTECT	An attempt was made to register a program whose number was protected.
076	ADDRESS P NOT DEFINED	Address P (program number) was not commanded in the block which includes an M98, G65, or G66 command. Modify the program.
077	SUB PROGRAM NESTING ERROR	The subprogram was called in five folds. Modify the program.
078	NUMBER NOT FOUND	A program number or a sequence number which was specified by address P in the block which includes an M98, M99, M65 or G66 was not found. The sequence number specified by a GOTO statement was not found. Otherwise, a called program is being edited in background processing. Correct the program, or discontinue the background editing.
079	PROGRAM VERIFY ERROR	In memory or program collation,a program in memory does not agree with that read from an external I/O device. Check both the programs in memory and those from the external device.
080	G37 ARRIVAL SIGNAL NOT ASSERTED (M series)	In the automatic tool length measurement function (G37), the measurement position reach signal (XAE, YAE, or ZAE) is not turned on within an area specified in parameter 6254 6255 (value ε). This is due to a setting or operator error.
	G37 ARRIVAL SIGNAL NOT ASSERTED (T series)	In the automatic tool compensation function (G36, G37), the measurement position reach signal (XAE or ZAE) is not turned on within an area specified in parameter 6254 (value ε). This is due to a setting or operator error.
081	OFFSET NUMBER NOT FOUND IN G37 (M series)	Tool length automatic measurement (G37) was specified without a H code. (Automatic tool length measurement function) Modify the program.
	OFFSET NUMBER NOT FOUND IN G37 (T series)	Automatic tool compensation (G36, G37) was specified without a T code. (Automatic tool compensation function) Modify the program.
082	H–CODE NOT ALLOWED IN G37 (M series)	H code and automatic tool compensation (G37) were specified in the same block. (Automatic tool length measurement function) Modify the program.
	T–CODE NOT ALLOWED IN G37 (T series)	T code and automatic tool compensation (G36, G37) were specified in the same block. (Automatic tool compensation function) Modify the program.
083	ILLEGAL AXIS COMMAND IN G37 (M series)	In automatic tool length measurement, an invalid axis was specified or the command is incremental. Modify the program.
	ILLEGAL AXIS COMMAND IN G37 (T series)	In automatic tool compensation (G36, G37), an invalid axis was specified or the command is incremental. Modify the program.

Number	Message	Contents
085	COMMUNICATION ERROR	When entering data in the memory by using Reader / Puncher interface, an overrun, parity or framing error was generated. The number of bits of input data or setting of baud rate or specification No. of I/O unit is incorrect.
086	DR SIGNAL OFF	When entering data in the memory by using Reader / Puncher interface, the ready signal (DR) of reader / puncher was turned off. Power supply of I/O unit is off or cable is not connected or a P.C.B. is defective.
087	BUFFER OVERFLOW	When entering data in the memory by using Reader / Puncher interface, though the read terminate command is specified, input is not interrupted after 10 characters read. I/O unit or P.C.B. is defective.
088	LAN FILE TRANS ERROR (CHANNEL–1)	File data transfer via OSI–ETHERNET has been stopped due to a transfer error.
089	LAN FILE TRANS ERROR (CHANNEL–2)	File data transfer via OSI–ETHERNET has been stopped due to a transfer error.
090	REFERENCE RETURN INCOMPLETE	1. The reference position return cannot be performed normally because the reference position return start point is too close to the reference position or the speed is too slow. Separate the start point far enough from the reference position, or specify a sufficiently fast speed for reference position return. 2. During reference position return with the absolute–position detector, if this alarm occurs even though condition 1 is satisfied, do the following: After turning the servo motor for the axis at least one turn, turn the power off and then on again. Then perform reference position return.
091	REFERENCE RETURN INCOMPLETE	Manual reference position return cannot be performed when automatic operation is halted.
092	AXES NOT ON THE REFERENCE POINT	The commanded axis by G27 (Reference position return check) did not return to the reference position.
094	P TYPE NOT ALLOWED (COORD CHG)	P type cannot be specified when the program is restarted. (After the automatic operation was interrupted, the coordinate system setting operation was performed.) Perform the correct operation according to th operator's manual.
095	P TYPE NOT ALLOWED (EXT OFS CHG)	P type cannot be specified when the program is restarted. (After the automatic operation was interrupted, the external workpiece offset amount changed.) Perform the correct operation according to th operator's manual.
096	P TYPE NOT ALLOWED (WRK OFS CHG)	P type cannot be specified when the program is restarted. (After the automatic operation was interrupted, the workpiece offset amount changed.) Perform the correct operation according to the operator's manual.
097	P TYPE NOT ALLOWED (AUTO EXEC)	P type cannot be directed when the program is restarted. (After power ON, after emergency stop or P / S 94 to 97 reset, no automatic operation is performed.) Perform automatic operation.
098	G28 FOUND IN SEQUENCE RETURN	A command of the program restart was specified without the reference position return operation after power ON or emergency stop, and G28 was found during search. Perform the reference position return.
099	MDI EXEC NOT ALLOWED AFT. SEARCH	After completion of search in program restart, a move command is given with MDI. Move axis before a move command or don't interrupt MDI operation.
100	PARAMETER WRITE ENABLE	On the PARAMETER(SETTING) screen, PWE(parameter writing enabled) is set to 1. Set it to 0, then reset the system.

Number	Message	Contents
101	PLEASE CLEAR MEMORY	The power turned off while rewriting the memory by program edit operation. If this alarm has occurred, press <RESET> while pressing <PROG>, and only the program being edited will be deleted. Register the deleted program.
109	FORMAT ERROR IN G08	A value other than 0 or 1 was specified after P in the G08 code, or no value was specified.
110	DATA OVERFLOW	The absolute value of fixed decimal point display data exceeds the allowable range. Modify the program.
111	CALCULATED DATA OVERFLOW	The result of calculation turns out to be invalid, an alarm No.111 is issued. -10^{47} to -10^{-29}, 0, 10^{-29} to 10^{47} Modify the program.
112	DIVIDED BY ZERO	Division by zero was specified. (including tan 90°) Modify the program.
113	IMPROPER COMMAND	A function which cannot be used in custom macro is commanded. Modify the program.
114	FORMAT ERROR IN MACRO	There is an error in other formats than <Formula>. Modify the program.
115	ILLEGAL VARIABLE NUMBER	A value not defined as a variable number is designated in the custom macro or in high–speed cycle machining. The header contents are improper. This alarm is given in the following cases: High speed cycle machining 1. The header corresponding to the specified machining cycle number called is not found. 2. The cycle connection data value is out of the allowable range (0 – 999). 3. The number of data in the header is out of the allowable range (0 – 32767). 4. The start data variable number of executable format data is out of the allowable range (#20000 – #85535). 5. The last storing data variable number of executable format data is out of the allowable range (#85535). 6. The storing start data variable number of executable format data is overlapped with the variable number used in the header. Modify the program.
116	WRITE PROTECTED VARIABLE	The left side of substitution statement is a variable whose substitution is inhibited. Modify the program.
118	PARENTHESIS NESTING ERROR	The nesting of bracket exceeds the upper limit (quintuple). Modify the program.
119	ILLEGAL ARGUMENT	The SQRT argument is negative. Or BCD argument is negative, and other values than 0 to 9 are present on each line of BIN argument. Modify the program.
122	FOUR FOLD MACRO MODAL–CALL	The macro modal call is specified four fold. Modify the program.
123	CAN NOT USE MACRO COMMAND IN DNC	Macro control command is used during DNC operation. Modify the program.
124	MISSING END STATEMENT	DO – END does not correspond to 1 : 1. Modify the program.
125	FORMAT ERROR IN MACRO	<Formula> format is erroneous. Modify the program.
126	ILLEGAL LOOP NUMBER	In DOn, $1 \leqq n \leqq 3$ is not established. Modify the program.

Number	Message	Contents
127	NC, MACRO STATEMENT IN SAME BLOCK	NC and custom macro commands coexist. Modify the program.
128	ILLEGAL MACRO SEQUENCE NUMBER	The sequence number specified in the branch command was not 0 to 9999. Or, it cannot be searched. Modify the program.
129	ILLEGAL ARGUMENT ADDRESS	An address which is not allowed in <Argument Designation > is used. Modify the program.
130	ILLEGAL AXIS OPERATION	An axis control command was given by PMC to an axis controlled by CNC. Or an axis control command was given by CNC to an axis controlled by PMC. Modify the program.
131	TOO MANY EXTERNAL ALARM MESSAGES	Five or more alarms have generated in external alarm message. Consult the PMC ladder diagram to find the cause.
132	ALARM NUMBER NOT FOUND	No alarm No. concerned exists in external alarm message clear. Check the PMC ladder diagram.
133	ILLEGAL DATA IN EXT. ALARM MSG	Small section data is erroneous in external alarm message or external operator message. Check the PMC ladder diagram.
135	ILLEGAL ANGLE COMMAND (M series)	The index table indexing positioning angle was instructed in other than an integral multiple of the value of the minimum angle. Modify the program.
	SPINDLE ORIENTATION PLEASE (T series)	Without any spindle orientation , an attept was made for spindle indexing. Perform spindle orientation.
136	ILLEGAL AXIS COMMAND (M series)	In index table indexing.Another control axis was instructed together with the B axis. Modify the program.
	C/H–CODE & MOVE CMD IN SAME BLK. (T series)	A move command of other axes was specified to the same block as spindle indexing addresses C, H. Modify the program.
137	M–CODE & MOVE CMD IN SAME BLK.	A move command of other axes was specified to the same block as M–code related to spindle indexing. Modify the program.
138	SUPERIMPOSED DATA OVERFLOW	The total distribution amount of the CNC and PMC is too large during superimposed control of the extended functions for PMC axis control.
139	CAN NOT CHANGE PMC CONTROL AXIS	An axis is selected in commanding by PMC axis control. Modify the program.
141	CAN NOT COMMAND G51 IN CRC (M series)	G51 (Scaling ON) is commanded in the tool offset mode. Modify the program.
142	ILLEGAL SCALE RATE (M series)	Scaling magnification is commanded in other than 1 – 999999. Correct the scaling magnification setting (G51 P_p ..... or parameter 5411 or 5421).
143	SCALED MOTION DATA OVERFLOW (M series)	The scaling results, move distance, coordinate value and circular radius exceed the maximum command value. Correct the program or scaling mangification.
144	ILLEGAL PLANE SELECTED (M series)	The coordinate rotation plane and arc or cutter compensation C plane must be the same. Modify the program.
145	ILLEGAL CONDITIONS IN POLAR COORDINATE INTERPOLATION	The conditions are incorrect when the polar coordinate interpolation starts or it is canceled. 1) In modes other than G40, G12.1/G13.1 was specified. 2) An error is found in the plane selection. Parameters No. 5460 and No. 5461 are incorrectly specified. Modify the value of program or parameter.
146	IMPROPER G CODE	G codes which cannot be specified in the polar coordinate interpolation mode was specified. See section II–4.4 and modify the program.
148	ILLEGAL SETTING DATA (M series)	Automatic corner override deceleration rate is out of the settable range of judgement angle. Modify the parameters (No.1710 to No.1714)

Number	Message	Contents
149	FORMAT ERROR IN G10L3	A code other than Q1,Q2,P1 or P2 was specified as the life count type in the extended tool life management.
150	ILLEGAL TOOL GROUP NUMBER	Tool Group No. exceeds the maximum allowable value. Modify the program.
151	TOOL GROUP NUMBER NOT FOUND	The tool group commanded in the machining program is not set. Modify the value of program or parameter.
152	NO SPACE FOR TOOL ENTRY	The number of tools within one group exceeds the maximum value registerable. Modify the number of tools.
153	T–CODE NOT FOUND	In tool life data registration, a T code was not specified where one should be. Correct the program.
154	NOT USING TOOL IN LIFE GROUP (M series)	When the group is not commanded, H99 or D99 was commanded. Correct the program.
155	ILLEGAL T–CODE IN M06 (M series)	In the machining program, M06 and T code in the same block do not correspond to the group in use. Correct the program.
	ILLEGAL T–CODE IN M06 (T series)	Group No.ΔΔ which is specified with TΔΔ 88 of the machining program do not included in the tool group in use. Correct the program.
156	P/L COMMAND NOT FOUND	P and L commands are missing at the head of program in which the tool group is set. Correct the program.
157	TOO MANY TOOL GROUPS	The number of tool groups to be set exceeds the maximum allowable value. (See parameter No. 6800 bit 0 and 1) Modify the program.
158	ILLEGAL TOOL LIFE DATA	The tool life to be set is too excessive. Modify the setting value.
159	TOOL DATA SETTING INCOMPLETE	During executing a life data setting program, power was turned off. Set again.
160	MISMATCH WAITING M–CODE (T series (At two–path))	Diffrent M code is commanded in heads 1 and 2 as waiting M code. Modify the program.
	MISMATCH WAITING M–CODE (T series (At three–path))	1) Although the same P command is specified, the waiting M codes do not match. 2) Although the waiting M codes match, the P commands do not match. 3) Two–path wait and three–path wait are specified simultaneously. Modify the program.
	G72.1 NESTING ERROR (M series)	A subprogram which performs rotational copy with G72.1 contains another G72.1 command.
161	ILLEGAL P OF WAITING M–CODE (T series (three–path control)	1) The value of address P is a negative value, 1, 2, 4, or a value not smaller than 8. 2) The value specified in P is not consistent with the system configuration. Modify the program.
	G72.1 NESTING ERROR (M series)	A subprogram which performs parallel copy with G72.2 contains another G72.2 command.
163	COMMAND G68/G69 INDEPENDENTLY (T series (At two–path))	G68 and G69 are not independently commanded in balance cut. Modify the program.
169	ILLEGAL TOOL GEOMETRY DATA (At two–path)	Incorrect tool figure data in interference check. Set correct data, or select correct tool figure data.
175	ILLEGAL G107 COMMAND	Conditions when performing circular interpolation start or cancel not correct. To change the mode to the cylindrical interpolation mode, specify the command in a format of “G07.1 rotation–axis name radius of cylinder.”

Number	Message	Contents
176	IMPROPER G–CODE IN G107 (M series)	Any of the following G codes which cannot be specified in the cylindrical interpolation mode was specified. 1) G codes for positioning: G28,, G73, G74, G76, G81 – G89, including the codes specifying the rapid traverse cycle 2) G codes for setting a coordinate system: G52,G92, 3) G code for selecting coordinate system: G53 G54–G59 Modify the program.
	IMPROPER G–CODE IN G107 (T series)	Any of the following G codes which cannot be specified in the cylindrical interpolation mode was specified. 1) G codes for positioning: G28, G76, G81 – G89, including the codes specifying the rapid traverse cycle 2) G codes for setting a coordinate system: G50, G52 3) G code for selecting coordinate system: G53 G54–G59 Modify the program.
177	CHECK SUM ERROR (G05 MODE)	Check sum error Modify the program.
178	G05 COMMANDED IN G41/G42 MODE	G05 was commanded in the G41/G42 mode. Correct the program.
179	PARAM. (NO. 7510) SETTING ERROR	The number of controlled axes set by the parameter 7510 exceeds the maximum number. Modify the parameter setting value.
180	COMMUNICATION ERROR (REMOTE BUF)	Remote buffer connection alarm has generated. Confirm the number of cables, parameters and I/O device.
181	FORMAT ERROR IN G81 BLOCK (Hobbing machine, EGB) (M series)	G81 block format error (hobbing machine) 1) T (number of teeth) has not been instructed. 2) Data outside the command range was instructed by either T, L, Q or P. 3) An overflow occurred in synchronization coefficient calculation. Modify the program.
182	G81 NOT COMMANDED (Hobbing machine) (M series)	G83 (C axis servo lag quantity offset) was instructed though synchronization by G81 has not been instructed. Correct the program. (hobbing machine)
183	DUPLICATE G83 (COMMANDS) (Hobbing machine) (M series)	G83 was instructed before canceled by G82 after compensating for the C axis servo lag quantity by G83. (hobbing machine)
184	ILLEGAL COMMAND IN G81 (Hobbing machine, EGB) (M series)	A command not to be instructed during synchronization by G81 was instructed. (hobbing machine) 1) A C axis command by G00, G27, G28, G29, G30, etc. was instructed. 2) Inch/Metric switching by G20, G21 was instructed.
185	RETURN TO REFERENCE POINT (Hobbing machine) (M series)	G81 was instructed without performing reference position return after power on or emergency stop. (hobbing machine) Perform reference position return.
186	PARAMETER SETTING ERROR (Hobbing machine, EGB) (M series)	Parameter error regarding G81 (hobbing machine) 1) The C axis has not been set to be a rotary axis. 2) A hob axis and position coder gear ratio setting error Modify the parameter.
187	HOB COMMAND IS NOT ALLOWED	Error in the modal state when G81.4 or G81 is specified 1. The canned cycle mode (G81 to G89) is set. 2. The thread cutting mode is set. 3. The C–axis is under synchronous, composite, or superimposed control.

Number	Message	Contents
190	ILLEGAL AXIS SELECT	In the constant surface speed control, the axis specification is wrong. (See parameter No. 3770.) The specified axis command (P) contains an illegal value. Correct the program.
194	SPINDLE COMMAND IN SYNCHRO–MODE	A contour control mode, spindle positioning (Cs–axis control) mode, or rigid tapping mode was specified during the serial spindle synchronous control mode. Correct the program so that the serial spindle synchronous control mode is released in advance.
197	C–AXIS COMMANDED IN SPINDLE MODE	The program specified a movement along the Cs–axis when the signal CON(DGN=G027#7) was off. Correct the program, or consult the PMC ladder diagram to find the reason the signal is not turned on.
199	MACRO WORD UNDEFINED	Undefined macro word was used. Modify the custom macro.
200	ILLEGAL S CODE COMMAND	In the rigid tap, an S value is out of the range or is not specified. Modify the program.
201	FEEDRATE NOT FOUND IN RIGID TAP	In the rigid tap, no F value is specified. Correct the program.
202	POSITION LSI OVERFLOW	In the rigid tap, spindle distribution value is too large. (System error)
203	PROGRAM MISS AT RIGID TAPPING	In the rigid tap, position for a rigid M code (M29) or an S command is incorrect. Modify the program.
204	ILLEGAL AXIS OPERATION	In the rigid tap, an axis movement is specified between the rigid M code (M29) block and G84 or G74 for M series (G84 or G88 for T series) block. Modify the program.
205	RIGID MODE DI SIGNAL OFF	1. Although a rigid M code (M29) is specified in rigid tapping, the rigid mode DI signal (DGN G061.0) is not ON during execution of the G84 (G88) block. 2. In a system with the multi–spindle option, the spindle used for rigid tapping is not selected (by DI signal G27#0 and #1, or G61#4 and #5). Check the PMC ladder diagram to find the reason why the DI signal is not turned on.
206	CAN NOT CHANGE PLANE (M series)	Plane changeover was instructed in the rigid mode. Correct the program.
207	RIGID DATA MISMATCH	The specified distance was too short or too long in rigid tapping.
210	CAN NOT COMAND M198/M199	M98 and M99 are executed in the schedule operation. M198 is executed in the DNC operation. Modify the program. 1) The execution of an M198 or M99 command was attempted during scheduled operation. Alternatively, the execution of an M198 command was attempted during DNC operation. Correct the program. The execution of an M99 command was attempted by an interrupt macro during pocket machining in a multiple repetitive canned cycle.
211	G31 (HIGH) NOT ALLOWED IN G99 (T series)	G31 is commanded in the per revolution command when the high–speed skip option is provided. Modify the program.
212	ILLEGAL PLANE SELECT (M series)	The arbitrary angle chamfering or a corner R is commanded or the plane including an additional axis. Correct the program.
	ILLEGAL PLANE SELECT (T series)	The direct drawing dimensions programming is commanded for the plane other than the Z–X plane. Correct the program.

Number	Message	Contents
213	ILLEGAL COMMAND IN SYNCHRO–MODE (M series)	Movement is commanded for the axis to be synchronously controlled. Any of the following alarms occurred in the operation with the simple synchronization control. 1) The program issued the move command to the slave axis. 2) The program issued the manual continuous feed/manual handle feed/incremental feed command to the slave axis. 3) The program issued the automatic reference position return command without specifying the manual reference position return after the power was turned on. 4) The difference between the position error amount of the master and slave axes exceeded the value specified in parameter NO.8313.
	ILLEGAL COMMAND IN SYNCHRO–MODE (T series)	A move command has been specified for an axis subject to synchronous control.
214	ILLEGAL COMMAND IN SYNCHRO–MODE	Coordinate system is set or tool compensation of the shift type is executed in the synchronous control. Correct the program.
217	DUPLICATE G51.2 (COMMANDS) (T series)	G51.2/G251 is further commanded in the G51.2/G251 mode. Modify the program.
218	NOT FOUND P/Q COMMAND IN G251 (T series)	P or Q is not commanded in the G251 block, or the command value is out of the range. Modify the program.
219	COMMAND G250/G251 INDEPENDENTLY (T series)	G251 and G250 are not independent blocks.
220	ILLEGAL COMMAND IN SYNCHR–MODE (T series)	In the synchronous operation, movement is commanded by the NC program or PMC axis control interface for the synchronous axis.
221	ILLEGAL COMMAND IN SYNCHR–MODE (T series)	Polygon machining synchronous operation and axis control or balance cutting are executed at a time. Modify the program.
222	DNC OP. NOT ALLOWED IN BG.–EDIT (M series)	Input and output are executed at a time in the background edition. Execute a correct operation.
224	RETURN TO REFERENCE POINT (M series)	Reference position return has not been performed before the automatic operation starts. Perform reference position return only when bit 0 of parameter 1005 is 0.
	TURN TO REFERENCE POINT (T series)	Reference position return is necessary before cycle start.
225	SYNCHRONOUS/MIXED CONTROL ERROR (T series (At two–path))	This alarm is generated in the following circumstances. (Searched for during synchronous and mixed control command. 1 When there is a mistake in axis number parameter (No. 1023) setting. 2 When there is a mistake in control commanded. During hobbing synchronization, a command to bring the C–axis under synchronous, composite, or superimposed control is made. Modify the program or the parameter.
226	ILLEGAL COMMAND IN SYNCHRO–MODE (T series (At two–path))	A travel command has been sent to the axis being synchronized in synchronous mode. Modify the program or the parameter.
229	CAN NOT KEEP SYNCHRO–STATE (T series)	This alarm is generated in the following circumstances. 1 When the synchro/mixed state could not be kept due to system overload. 2 The above condition occurred in CMC devices (hardware) and synchro–state could not be kept. (This alarm is not generated in normal use conditions.)
230	R CODE NOT FOUND (Grinding machine) (M series)	The infeed quantity R has not been instructed for the G161 block. Or the R command value is negative. Correct the program.

Number	Message	Contents
231	ILLEGAL FORMAT IN G10 OR L50	Any of the following errors occurred in the specified format at the programmable–parameter input. 1 Address N or R was not entered. 2 A number not specified for a parameter was entered. 3 The axis number was too large. 4 An axis number was not specified in the axis–type parameter. 5 An axis number was specified in the parameter which is not an axis type. Correct the program. 6 In the locked state set by the password function, an attempt was made to set bit 4 (NE9) of parameter No. 3204 to 0 or change the contents of parameter No. 3210. 7 An attempt was made to change a program encryption parameter (parameter No. 3220 to 3223).
232	TOO MANY HELICAL AXIS COMMANDS	Three or more axes (in the normal direction control mode (M series) two or more axes) were specified as helical axes in the helical interpolation mode.
233	DEVICE BUSY	When an attempt was made to use a unit such as that connected via the RS–232–C interface, other users were using it.
239	BP/S ALARM	While punching was being performed with the function for controlling external I/O units ,background editing was performed.
240	BP/S ALARM	Background editing was performed during MDI operation.
241	ILLEGAL FORMAT IN G02.2/G03.2 (M series)	The end point, I, J, K, or R is missing from a command for involute interpolation.
242	ILLEGAL COMMAND IN G02.2/G03.2 (M series)	An invalid value has been specified for involute interpolation. • The start or end point is within the basic circle. • I, J, K, or R is set to 0. • The number of rotations between the start of the involute curve and the start or end point exceeds 100.
243	OVER TOLERANCE OF END POINT (M series)	The end point is not on the involute curve which includes the start point and thus falls outside the range specified with parameter No. 5610.
244	P/S ALARM (T series)	In the skip function activated by the torque limit signal, the number of accumulated erroneous pulses exceed 32767 before the signal was input. Therefore, the pulses cannot be corrected with one distribution. Change the conditions, such as feed rates along axes and torque limit, and try again.
245	T–CODE NOT ALOWEE IN THIS BLOCK (T series)	One of the G codes, G50, G10, and G04, which cannot be specified in the same block as a T code, was specified with a T code.
246	ENCODE PROGRAM NUMBER ERROR	During read of an encrypted program, an attempt was made to store the program with a number exceeding the protection range. (See parameter Nos. 3222 and 223.)
247	ILLEGAL CODE USED FOR OUTPUT	When an encrypted program is output, EIA is set for the punch code. Specify ISO.
250	Z AXIS WRONG COMMAND (ATC) (M series)	Movement along the Z–axis is specified in a block specifying a tool change command (M06T_). (Only for ROBODRILL)

Number	Message	Contents
251	ATC ERROR (M series)	This alarm is issued in the following cases: • An M06T_ command contains an unusable T code. • An M06 command has been specified when the Z machine coordi nate is positive. • The parameter for the current tool number (No. 7810) is set to 0. • An M06 command has been specified in canned cycle mode. • A reference position return command (G27 to G44) and M06 command have been specified in the same block. • An M06 command has been specified in tool compensation mode (G41 to G44). • An M06 command has been specified without performing reference position return after power–on or the release of emergency stop. • The machine lock signal or Z–axis ignore signal has been turned on during tool exchange. • A pry alarm has been detected during tool exchange. Refer to diagnosis No. 530 to determine the cause. (Only for ROBODRILL)
252	ATC SPINDLE ALARM (M series)	An excessive error arose during spindle positioning for ATC. For details, refer to diagnosis No. 531. (Only for ROBODRILL)
253	G05 IS NOT AVAILABLE (M series)	Alarm details Binary input operation using high–speed remote buffer (G05) or high–speed cycle machining (G05) has been specified in advance control mode (G08P1). Execute G08P0; to cancel advance control mode, before executing these G05 commands.
4500	REPOSITIONING INHIBITED	A repositioning command was specified in the circular interpolation (G02, G03) mode.
4502	ILLEGAL COMMAND IN BOLT HOLE	In a bolt hole circle (G26) command, the radius (I) was set to zero or a negative value, or the number of holes (K) was set to zero. Alternatively, I, J, or K was not specified.
4503	ILLEGAL COMMAND IN LINE AT ANGLE	In a line-at-angle (G76) command, the number of holes (K) was set to zero or a negative value. Alternatively, I, J, or K was not specified.
4504	ILLEGAL COMMAND IN ARC	In an arc (G77) command, the radius (I) or the number of holes (K) was set to zero or a negative value. Alternatively, I, J, K, or P was not specified.
4505	ILLEGAL COMMAND IN GRID	In a grid (G78, G79) command, the number of holes (P, K) was set to zero or a negative value. Alternatively, I, J, K, or P was not specified.
4506	ILLEGAL COMMAND IN SHARE PROOFS	In a shear proof (G86) command, the tool size (P) was set to zero, or the blanking length (I) was 1.5 times larger than the tool size (P) or less. Alternatively, I, J, or P was not specified.
4507	ILLEGAL COMMAND IN SQUARE	In a square (G87) command, the tool size (P,Q) was set to zero or a negative value, or the blanking length (I, J) was three times larger than the tool size (P, Q) or less. Alternatively, I, J, P, or Q was not specified.
4508	ILLEGAL COMMAND IN RADIUS	In a radius (G88) command, the traveling pitch (Q) or radius (I) was set to zero or a negative value, or the traveling pitch (Q) was greater than or equal to the arc length. Alternatively, I, J, K, P, or Q was not specified.
4509	ILLEGAL COMMAND IN CUT AT ANGLE	In a cut-at-angle (G89) command, the traveling pitch (Q) was set to zero, negative value, or another value larger than or equal to the length (I). Alternatively, I, J, P, or Q was not specified.
4510	ILLEGAL COMMAND IN LINE-PUNCH	In a linear punching (G45) command, the traveling distance was set to zero or a value 1.5 times larger than the tool size (P) or less. Alternatively, P was not specified.

Number	Message	Contents
4511	ILLEGAL COMMAND IN CIRCLE-PUNCH	In a circular punching (G46, G47) command, the same position was specified for both start and end points of the arc, radius (R) of the arc was set to zero, or the pitch (Q) was set to a value exceeding the arc length. Alternatively, R or Q was not specified.
4520	T, M INHIBITED IN NIBBLING-MODE	T code, M code, G04, G70 or G75 was specified in the nibbling mode.
4521	EXCESS NIBBLING MOVEMENT (X, Y)	In the nibbling mode, the X-axis or Y-axis traveling distance was larger than or equal to the limit (No. 16188 to 16193).
4522	EXCESS NIBBLING MOVEMENT (C)	In the circular nibbling (G68) or usual nibbling mode, the C-axis traveling distance was larger than or equal to the limit (No. 16194).
4523	ILLEGAL COMMAND IN CIRCLE-NIBBL	In a circular nibbling (G68) command, the traveling pitch (Q) was set to zero, a negative value, or a value larger than or equal to the limit (No. 16186, 16187), or the radius (I) was set to zero or a negative value. Alternatively, I, J, K, P, or Q was not specified.
4524	ILLEGAL COMMAND IN LINE-NIBBL	In a linear nibbling (G69) command, the traveling pitch (Q) was set to zero, negative value, or a value larger than or equal to the limit (No. 16186, 16187). Alternatively, I, J, P, or Q was not specified.
4530	A/B MACRO NUMBER ERROR	The number for storing and calling by an A or B macro was set to a value beyond the range from 1 to 5.
4531	U/V MACRO FORMAT ERROR	An attempt was made to store a macro while storing another macro using a U or V macro. A V macro was specified although the processing to store a macro was not in progress. A U macro number and V macro number do not correspond with each other.
4532	IMPROPER U/V MACRO NUMBER	The number of an inhibited macro (number beyond the range from 01 to 99) was specified in a U or V macro command.
4533	U/V MACRO MEMORY OVERFLOW	An attempt was made to store too many macros with a U or V macro command.
4534	W MACRO NUMBER NOT FOUND	Macro number W specified in a U or V macro command is not stored.
4535	U/V MACRO NESTING ERROR	An attempt was made to call a macro which is defined three times or more using a U or V macro command. An attempt was made to store 15 or more macros in the storage area for macros of number 90 to 99.
4536	NO W, Q COMMAND IN MULTI-PIECE	W or Q was not specified in the command for taking multiple workpieces (G73, G74).
4537	ILLEGAL Q VALUE IN MULTI-PIECE	In the command for taking multiple workpieces (G73, G74), Q is set to a value beyond the range from 1 to 4.
4538	W NO. NOT FOUND IN MULTI-PIECE	Macro number W specified in the command for taking multiple workpieces (G73, G74) is not stored.
4539	MULTI-PIECE SETTING IS ZERO	The command for taking multiple workpieces (G73, G74) was specified although zero is specified for the function to take multiple workpieces (No. 16206 or signals MLP1 and MLP2 (PMC address G231, #0 and #1)).
4540	MULTI-PIECE COMMAND WITHIN MACRO	The command for taking multiple workpieces (G73, G74) was specified when a U or V macro was being stored.
4542	MULTI-PIECE COMMAND ERROR	Although G98P0 was specified, the G73 command was issued. Although G98K0 was specified, the G74 command was issued.

Number	Message	Contents
4543	MULTI-PIECE Q COMMAND ERROR	Although G98P0 was specified, the Q value for the G74 command was not 1 or 3. Although G98K0 was specified, the Q value for the G73 command was not 1 or 2.
4544	MULTI-PIECE RESTART ERROR	In the command for resuming taking multiple workpieces, the resume position (P) is set to a value beyond the range from 1 to total number of workpieces to be machined.
4549	ILLEGAL TOOL DATA FORMAT	The quantity of tool data patterns to be saved is too large to fit the usable area (16 KB).
4600	T, C COMMAND IN INTERPOLATION	In the linear interpolation (G01) mode or circular interpolation (G02, G03) mode, a T command or C-axis command was specified.
4601	INHIBITED T, M COMMAND	In the block of G52, G72, G73, or G74, a T or M command was specified.
4602	ILLEGAL T-CODE	The specified T command is not cataloged on the tool register screen.
4603	C AXIS SYNCHRONOUS ERROR	The difference between the position deviation value of C1 axis and C2 axis exceeds the parameter value (No. 16364, 16365) with the C–axis synchronous control function.
4604	ILLEGAL AXIS OPERATION	A C-axis command was specified in the block containing a T command for multiple tools.
4605	NEED ZRN	C–axis synchronization failed.
4630	ILLEGAL COMMAND IN LASER MODE	In the laser mode, a nibbling command or pattern command was specified. In the tracing mode, an attempt was made to make a switch to the punching mode.
4650	IMPROPER G-CODE IN OFFSET MODE	In the cutter compensation mode, an inhibited G code (pattern command, G73, G74, G75, etc.) was specified.
4700	PROGRAM ERROR (OT +)	The value specified in the X-axis move command exceeded the positive value of stored stroke limit 1. (Advance check)
4701	PROGRAM ERROR (OT –)	The value specified in the X-axis move command exceeded the negative value of stored stroke limit 1. (Advance check)
4702	PROGRAM ERROR (OT +)	The value specified in the Y-axis move command exceeded the positive value of stored stroke limit 1. (Advance check)
4703	PROGRAM ERROR (OT –)	The value specified in the Y-axis move command exceeded the negative value of stored stroke limit 1. (Advance check)
4704	PROGRAM ERROR (OT +)	The value specified in the Z-axis move command exceeded the positive value of stored stroke limit 1. (Advance check)
4705	PROGRAM ERROR (OT –)	The value specified in the Z-axis move command exceeded the negative value of stored stroke limit 1. (Advance check)
5000	ILLEGAL COMMAND CODE (M series)	The specified code was incorrect in the high–precision contour control (HPCC) mode.
5003	ILLEGAL PARAMETER (HPCC) (M series)	There is an invalid parameter.
5004	HPCC NOT READY (M series)	High–precision contour control is not ready.
5006	TOO MANY WORD IN ONE BLOCK (M series)	The number of words specified in a block exceeded 26 in the HPCC mode.
5007	TOO LARGE DISTANCE (M series)	In the HPCC mode, the machine moved beyond the limit.
5009	PARAMETER ZERO (DRY RUN) (M series)	The maximum feedrate (parameter No. 1422) or the feedrate in dry run (parameter No. 1410) is 0 in the HPCC model.
5010	END OF RECORD	The end of record (%) was specified. I/O is incorrect. modify the program.

Number	Message	Contents
5011	PARAMETER ZERO(CUT MAX) (M series)	The maximum cutting feedrate (parameter No. 1422, No. 1430, No. 1431, No. 1432) is 0 in the HPCC mode.
5012	G05 P10000 ILLEGAL START UP (HPCC) (M series)	Function category: High–precision contour control Alarm details: G05 P10000 has been specified in a mode from which the system cannot enter HPCC mode.
5013	HPCC: CRC OFS REMAIN AT CANCEL (M series)	G05P0 has been specified in G41/G42 mode or with offset remaining.
5014	TRACE DATA NOT FOUND	Transfer cannot be performed because no trace data exists.
5015	NO ROTATION AXIS (M series)	The specified rotation axis does not exist for tool axis direction handle feed.
5016	ILLEGAL COMBINATION OF M CODE	M codes which belonged to the same group were specified in a block. Alternatively,an M code which must be specified without other M codes in the block was specified in a block with other M codes.
5018	POLYGON SPINDLE SPEED ERROR (T series)	Function category: Polygon turning Alarm details: In G51.2 mode, the speed of the spindle or polygon synchronous axis either exceeds the clamp value or is too small. The specified rotation speed ratio thus cannot be maintained.
5020	PARAMETER OF RESTART ERROR	An erroneous parameter was specified for restarting a program. A parameter for program restart is invalid.
5030	ILLEGAL COMMAND (G100) (T series)	The end command (G110) was specified before the registratioin start command (G101, G102, or G103) was specified for the B–axis.
5031	ILLEGAL COMMAND (G100, G102, G103) (T series)	While a registration start command (G101, G102, or G103) was being executed, another registration start command was specified for the B–axis.
5032	NEW PRG REGISTERED IN B–AXS MOVE (T series)	While the machine was moving about the B–axis, at attempt was made to register another move command.
5033	NO PROG SPACE IN MEMORY B–AXS (T series)	Commands for movement about the B–axis were not registered because of insufficient program memory.
5034	PLURAL COMMAND IN G110 (T series)	Multiple movements were specified with the G110 code for the B–axis.
5035	NO FEEDRATE COMMANDED B–AXS (T series)	A feedrate was not specified for cutting feed about the B–axis.
5036	ADDRESS R NOT DEFINED IN G81–G86 (T series)	Point R was not specified for the canned cycle for the B–axis.
5037	ADDRESS Q NOT DEFINED IN G83 (T series)	Depth of cut Q was not specified for the G83 code (peck drilling cycle). Alternatively, 0 was specified in Q for the B–axis.
5038	TOO MANY START M–CODE COMMAND (T series)	More than six M codes for starting movement about the B–axis were specified.
5039	START UNREGISTERED B–AXS PROG (T series)	An attempt was made to execute a program for the B–axis which had not been registered.
5040	CAN NOT COMMANDED B–AXS MOVE (T series)	The machine could not move about the B–axis because parameter No.8250 was incorrectly specified, or because the PMC axis system could not be used.
5041	CAN NOT COMMANDED G110 BLOCK (T series)	Blocks containing the G110 codes were successively specified in tool–tip radius compensation for the B–axis.

Number	Message	Contents
5043	TOO MANY G68 NESTING (M series)	Three–dimensional coordinate conversion G68 has been specified three or more times.
	TOO MANY G68 NESTING (T series)	Three–dimensional coordinate conversion G68.1 has been specified three or more times.
5044	G68 FORMAT ERROR (M series)	A G68 command block contains a format error. This alarm is issued in the following cases: 1. I, J, or K is missing from a G68 command block (missing coordinate rotation option). 2. I, J, and K are 0 in a G68 command block. 3. R is missing from a G68 command block.
	G68 FORMAT ERROR (T series)	A G68.1 command block contains a format error. This alarm is issued in the following cases: 1. I, J, or K is missing from a G68.1 command block (missing coordinate rotation option). 2. I, J, and K are 0 in a G68.1 command block. 3. R is missing from a G68.1 command block.
5046	ILLEGAL PARAMETER (ST.COMP)	The parameter settings for straightness compensation contain an error. Possible causes are as follows: 1. A parameter for a movement axis or compensation axis contains an axis number which is not used. 2. More than 128 pitch error compensation points exist between the negative and positive end points. 3. Compensation point numbers for straightness compensation are not assigned in the correct order. 4. No straightness compensation point exists between the pitch error compensation points at the negative and positive ends. 5. The compensation value for each compensation point is too large or too small. 6 The settings of parameters Nos. 13881 to 13886 are illegal (in the interpolation type straightness compensation).
5050	ILL–COMMAND IN CHOPPING MODE (M series)	A command for switching the major axis has been specified for circular threading. Alternatively, a command for setting the length of the major axis to 0 has been specified for circular threading.
5051	M–NET CODE ERROR	Abnormal character received (other than code used for transmission)
5052	M–NET ETX ERROR	Abnormal ETX code
5053	M–NET CONNECT ERROR	Connection time monitoring error (parameter No. 175)
5054	M–NET RECEIVE ERROR	Polling time monitoring error (parameter No. 176)
5055	M–NET PRT/FRT ERROR	Vertical parity or framing error
5057	M–NET BOARD SYSTEM DOWN	Transmission timeout error (parameter No. 177) ROM parity error CPU interrupt other than the above
5058	G35/G36 FORMAT ERROR (T series)	A command for switching the major axis has been specified for circular threading. Alternatively, a command for setting the length of the major axis to 0 has been specified for circular threading.
5059	RADIUS IS OUT OF RANGE	A radius exceeding nine digits has been specified for circular interpolation with the center of the arc specified with I, J, and K.

Number	Message	Contents
5060	ILLEGAL PARAMETER IN G02.3/G03.3 (M series)	There is a parameter setting error. Parameter No. 5641 (setting of the linear axis) is not set. The axis set in parameter No. 5641 is not a linear axis. Parameter No. 5642 (setting of a rotation axis) is not set. The axis set in parameter No. 5642 is not a rotation axis. The linear and rotation axes cannot be controlled by the CNC. (The value set in parameter No. 1010 is exceeded.)
5061	ILLEGAL FORMAT IN G02.3/G03.3 (M series)	The exponential interpolation command (G02.3/G03.3) has a format error. Address I, J, or K is not specified. The value of address I, J, or K is 0.
5062	ILLEGAL COMMAND IN G02.3/G03.3	The value specified in an exponential interpolation command (G02.3/03.3) is illegal. A value that does not allow exponential interpolation is specified. (For example, a negative value is specified in In.)
5063	IS NOT PRESET AFTER REF. (M series)	Function category: Workpiece thickness measurement Alarm details The position counter was not preset before the start of workpiece thickness measurement. This alarm is issued in the following cases: (1) An attempt has been made to start measurement without first establishing the origin. (2) An attempt has been made to start measurement without first presetting the position counter after manual return to the origin.
5064	DIFFERRENT AXIS UNIT (IS–B, IS–C) (M series)	Circular interpolation has been specified on a plane consisting of axes having different increment systems.
5065	DIFFERENT AXIS UNIT (PMC AXIS) (M series)	Axes having different increment systems have been specified in the same DI/DO group for PMC axis control. Modify the setting of parameter No. 8010.
5067	G05 PO COMMANDED IN G68/G51 MODE (HPCC) (M series)	HPCC mode cannot be canceled during G51 (scaling) or G68 (coordinate system rotation). Correct the program.
5068	G31 FORMAT ERROR (M series)	The continuous high–speed skip command (G31 P90) has one of the following errors: 1. The axis along which the tool is moved is not specified. 2. More than one axis is specified as the axis along which the tool is moved. Alternatively, the EGB skip command (G31.8) or continuous high–speed skip command (G31.9) has one of the following errors: 1. A move command is specified for the EGB axis (workpiece axis). 2. More than one axis is specified. 3. P is not specified. 4. The specified Q value exceeds the allowable range. Correct the program.
5069	WHL–C:ILLEGA P–DATA (M series)	The P data in selection of the grinding–wheel wear compensation center is illegal.
5073	NO DECIMAL POINT	No decimal point has been specified for an address requiring a decimal point.
5074	ADDRESS DUPLICATION ERROR	The same address has been specified two or more times in a single block. Alternatively, two or more G codes in the same group have been specified in a single block.
5082	DATA SERVER ERROR	This alarm is detailed on the data server message screen.

Number	Message	Contents
5085	SMOOTH IPL ERROR 1	A block for specifying smooth interpolation contains a syntax error.
5096	MISMATCH WAITING M–CODE (M series)	Different wait codes (M codes) were specified in HEAD1 and HEAD2. Correct the program.
5110	NOT STOP POSITION (G05.1 G1) (M series)	An illegal G code was specified in AI contour control mode. A command was specified for the index table indexing axis in AI control mode.
	NOT STOP POSITION (G05.1 G1) (21*i*–M)	An illegal G code was specified in AI look–ahead control mode. A command was specified for the index table indexing axis in AI look–ahead control mode.
5111	IMPROPER MODEL G–CODE (G05.1 G1) (M series)	An illegal G code is left modal when AI contour control mode was specified.
	IMPROPER MODEL G–CODE (G05.1 G1) (21*i*–M)	An illegal G code is left modal when AI look–ahead control mode was specified.
5112	G08 CAN NOT BE COMMANDED (G05.1 G1) (M series)	Look–ahead control (G08) was specified in AI contour control mode.
	G08 CAN NOT BE COMMANDED (G05.1 G1) (21*i*–M)	Look–ahead control (G08) was specified in AI look–ahead control mode.
5114	NOT STOP POSITION (G05.1 Q1) (M series)	At the time of restart after manual intervention, the coordinates at which the manual intervention occurred have not been restored.
	CAN NOT ERROR IN MDI MODE (G05.1) (21*i*–M)	AI contour control (G05.1) was specified in MDI mode.
5115	SPL : ERROR (M series)	There is an error in the specification of the rank.
		No knot is specified.
		The knot specification has an error.
		The number of axes exceeds the limits.
		Other program errors
5116	SPL : ERROR (M series)	There is a program error in a block under look–ahead control.
		Monotone increasing of knots is not observed.
		In NURBS interpolation mode, a mode that cannot be used together is specified.
5117	SPL : ERROR (M series)	The first control point of NURBS is incorrect.
5118	SPL : ERROR (M series)	After manual intervention with manual absolute mode set to on, NURBS interpolation was restarted.

Number	Message	Contents
5122	ILLEGAL COMMAND IN SPIRAL (M series)	A spiral interpolation or conical interpolation command has an error. Specifically, this error is caused by one of the following: 1) L = 0 is specified. 2) Q = 0 is specified. 3) R/, R/, C is specified. 4) Zero is specified as height increment. 5) Three or more axes are specified as the height axes. 6) A height increment is specified when there are two height axes. 7) Conical interpolation is specified when the helical interpolation function is not selected. 8) Q < 0 is specified when radius difference > 0. 9) Q > 0 is specified when radius difference < 0. 10) A height increment is specified when no height axis is specified.
5123	OVER TOLERANCE OF END POINT (M series)	The difference between a specified end point and the calculated end point exceeds the allowable range (parameter 3471).
5124	CAN NOT COMMAND SPIRAL (M series)	A spiral interpolation or conical interpolation was specified in any of the following modes: 1) Scaling 2) Programmable mirror image 3) Polar coordinate interpolation In cutter compensation C mode, the center is set as the start point or end point.
5134	FSSB : OPEN READY TIME OUT	Initialization did not place FSSB in the open ready state.
5135	FSSB : ERROR MODE	FSSB has entered error mode.
5136	FSSB : NUMBER OF AMPS IS SMALL	In comparison with the number of controlled axes, the number of amplifiers recognized by FSSB is not enough.
5137	FSSB : CONFIGURATION ERROR	FSSB detected a configuration error.
5138	FSSB : AXIS SETTING NOT COMPLETE	In automatic setting mode, axis setting has not been made yet. Perform axis setting on the FSSB setting screen.
5139	FSSB : ERROR	Servo initialization did not terminate normally. The optical cable may be defective, or there may be an error in connection to the amplifier or another module. Check the optical cable and the connection status.
5155	NOT RESTART PROGRAM BY G05	During servo leaning control by G05, an attempt was made to perform restart operation after feed hold or interlock. This restart operation cannot be performed. (G05 leaning control terminates at the same time.)
5156	ILLEGAL AXIS OPERATION (AICC) (M series)	In AI contour control mode, the controlled axis selection signal (PMC axis control) changes. In AI contour control mode, the simple synchonous axis selection signal changes.
	ILLEGAL AXIS OPERATION (AICC) (21*i*–M)	In AI look–ahead control mode, the controlled axis selection signal (PMC axis control) changes. In AI look–ahead control mode, the simple synchonous axis selection signal changes.
5157	PARAMETER ZERO (AICC) (M series)	Zero is set in the parameter for the maximum cutting feedrate (parameter No. 1422 or 1432). Zero is set in the parameter for the acceleration/deceleration before interpolation (parameter No. 1770 or 1771). Set the parameter correctly.

Number	Message	Contents
5195	DIRECTION CAN NOT BE JUDGED (T series)	When the touch sensor with a single contact signal input is used in the direct input B function for tool offset measurement values, the stored pulse direction is not constant. One of the following conditions exists: · The stop state exists in offset write mode. · Servo off state · The direction varies. · Movement takes place simultaneously along two axes.
5196	ILLEGAL OPERATION (HPCC) (M series)	Detach operation was performed in HPCC mode. (If detach operation is performed in HPCC mode, this alarm is issued after the currently executed block terminates.)
5197	FSSB : OPEN TIME OUT	The CNC permitted FSSB to open, but FSSB was not opened.
5198	FSSB : ID DATA NOT READ	Temporary assignment failed, so amplifier initial ID information could not be read.
5199	FINE TORQUE SENSING PARAMETER	A parameter related to the fine torque sensing function is illegal. · The storage interval is invalid. · An invalid axis number is set as the target axis. Correct the parameter.
5212	SCREEN COPY : PARAMETER ERROR	There is a parameter setting error. Check that 4 is set as the I/O channel.
5213	SCREEN COPY : COMMUNICATION ERROR	The memory card cannot be used. Check the memory card. (Check whether the memory card is write–protected or defective.)
5214	SCREEN COPY : DATA TRANSFER ERROR	Data transfer to the memory card failed. Check whether the memory card space is insufficient and whether the memory card was removed during data transfer.
5218	ILLEGAL PARAMETER (INCL. COMP)	There is an inclination compensation parameter setting error. Cause: 1. The number of pitch error compensation points between the negative (–) end and positive (+) end exceeds 128. 2. The relationship in magnitude among the inclination compensation point numbers is incorrect. 3. An inclination compensation point is not located between the negative (–) end and positive (+) end of the pitch error compensation points. 4. The amount of compensation per compensation point is too large or too small. Correct the parameter.
5219	CAN NOT RETURN	Manual intervention or return is not allowed during three–dimensional coordinate conversion.
5220	REFERENCE POINT ADJUSTMENT MODE	A parameter for automatically set a reference position is set. (Bit 2 of parameter No. 1819 = 1) Perform automatic setting. (Position the machine at the reference position manually, then perform manual reference position return.) Supplementary: Automatic setting sets bit 2 of parameter No. 1819 to 0.
5222	SRAM CORRECTABLE ERROR	The SRAM correctable error cannot be corrected. Cause: A memory problem occurred during memory initialization. Action: Replace the master printed circuit board (SRAM module).

Number	Message	Contents
5227	FILE NOT FOUND	A specified file is not found during communication with the built–in Handy File.
5228	SAME NAME USED	There are duplicate file names in the built–in Handy File.
5229	WRITE PROTECTED	A floppy disk in the built–in Handy File is write protected.
5231	TOO MANY FILES	The number of files exceeds the limit during communication with the built–in Handy File.
5232	DATA OVER–FLOW	There is not enough floppy disk space in the built–in Handy File.
5235	COMMUNICATION ERROR	A communication error occurred during communication with the built–in Handy File.
5237	READ ERROR	A floppy disk in the built–in Handy File cannot be read from. The floppy disk may be defective, or the head may be dirty. Alternatively, the Handy File is defective.
5238	WRITE ERROR	A floppy disk in the built–in Handy File cannot be written to. The floppy disk may be defective, or the head may be dirty. Alternatively, the Handy File is defective.
5242	ILLEGAL AXIS NUMBER (M series)	The axis number of the synchronous master axis or slave axis is incorrect. (This alarm is issued when flexible synchronization is turned on.) Alternatively, the axis number of the slave axis is smaller than that of the master axis.
5243	DATA OUT OF RANGE (M series)	The gear ratio is not set correctly. (This alarm is issued when flexible synchronization is turned on.)
5244	TOO MANY DI ON (M series)	Even when an M code was encountered in automatic operation mode, the flexible synchronization mode signal was not driven on or off. Check the ladder and M codes.
5245	OTHER AXIS ARE COMMANDED (M series)	One of the following command conditions was present during flexible synchronization or when flexible synchronization was turned on: 1. The synchronous master axis or slave axis is the EGB axis. 2. The synchronous master axis or slave axis is the chopping axis. 3. In reference position return mode
5251	ILLEGAL PARAMETER IN G54.2 (M series)	A fixture offset parameter (No. 7580 to 7588) is illegal. Correct the parameter.
5252	ILLEGAL P COMMAND IN G54.2 (M series)	The P value specifying the offset number of a fixture offset is too large. Correct the program.
5257	G41/G42 NOT ALLOWED IN MDI MODE (M series)	G41/G42 (cutter compensation C: M series) was specified in MDI mode. (Depending on the setting of bit 4 of parameter No. 5008)
	G41/G42 NOT ALLOWED IN MDI MODE (T series)	G41/G42 (tool–nose radius compensation: T series) was specified in MDI mode. (Depending on the setting of bit 4 of parameter No. 5008)
5300	SET ALL OFFSET DATAS AGAIN	After the inch/metric automatic conversion function (OIM: Bit 0 of parameter No. 5006) for tool offset data is enabled or disabled, all the tool offset data must be reset. This message reminds the operator to reset the data. If this alarm is issued, reset all the tool offset data. Operating the machine without resetting the data will result in a malfunction.
5302	ILLEGAL COMMAND IN G68 MODE	A command to set the coordinate system is specified in the coordinate system rotation mode.

Number	Message	Contents
5303	TOUCH PANEL ERROR	A touch panel error occurred. Cause: 1. The touch panel is kept pressed. 2. The touch panel was pressed when power was turned on. Remove the above causes, and turn on the power again.
5306	MODE CHANGE ERROR	In a one–touch macro call, mode switching at the time of activation is not performed correctly.
5307	INTERNAL DATA OVER FLOW (M series)	In the following function, internal data exceeds the allowable range. 1) Improvement of the rotation axis feedrate
5311	FSSB:ILLEGAL CONNECTION	A connection related to FSSB is illegal. This alarm is issued when either of the following is found: 1. Two axes having adjacent servo axis numbers (parameter No. 1023), odd number and even number, are assigned to amplifiers to which different FSSB systems are connected. 2. The system does not satisfy the requirements for performing HRV control, and use of two pulse modules connected to different FSSB systems having different FSSB current control cycles is specified.
5321	S–COMP. VALUE OVERFLOW	The straightness compensation value has exceeded the maximum value of 32767.After this alarm is issued, make a manual reference position return.
5400	SPL:ILLEGAL AXIS COMMAND (M series)	An axis specified for spline interpolation or smooth interpolation is incorrect. If an axis that is not the spline axis is specified in spline interpolation mode, this alarm is issued. The spline axis is the axis specified in a block containing G06.1 or the next block. For smooth interpolation, the axis specified in G5.1Q2 is incorrect.
5401	SPL:ILLEGAL COMMAND (M series)	In a G code mode in which specification of G06.1 is not permitted, G06.1 is specified.
5402	SPL:ILLEGAL AXIS MOVING (M series)	A movement is made along an axis that is not the spline interpolation axis. For example, in three–dimensional tool compensation mode using an offset vector of which components are the X–, Y–, and Z–axes, when two–axis spline interpolation is performed with the two spline axes set to the X– and Y–axes, a movement along the Z–axis occurs, resulting in this alarm.
5403	SPL:CAN NOT MAKE VECTOR (M series)	Three–dimensional tool compensation vectors cannot be generated. · When a three–dimensional tool compensation vector is created for the second or subsequent point, that point, previous point, and next point are on the same straight line, and that straight line and the three–dimensional tool compensation vector for the previous point are in parallel. · When a three–dimensional tool compensation vector is created at the end point of smooth interpolation or spline interpolation, the end point and the point two points before are the same.
5405	ILLEGAL PARAMETER IN G41.2/ G42.2 (M series)	The parameter setting that determines the relationship between the rotation axis and rotation plane is incorrect.
5406	G41.3/G40 FORMAT ERROR (M series)	1) A G41.3 or G40 block contains a move command. 2) A G1.3 block contains a G code or M code for which buffering is suppressed.

Number	Message	Contents
5407	ILLEGAL COMMAND IN G41.3 (M series)	1) A G code that belongs to group 01 except G00 and G01 is specified in G41.3 mode. 2) An offset command (a G code belonging to group 07) is specified in G41.3 mode. 3) The block next to G41.3 (startup) contains no movement.
5408	G41.3 ILLEGAL START_UP (M series)	1) In a mode of group 01 except G00 and G01, G41.3 (startup) is specified. 2) At startup, the included angle of the tool direction vector and move direction vector is 0 or 180 degrees.
5409	ILLEGAL PARAMETER IN G41.3 (M series)	The parameter setting (No. xxxx to xxxx) that determines the relationship between the rotation axis and rotation plane is incorrect.
5411	NURBS:ILLEGAL ORDER (M series)	The number of steps is specified incorrectly.
5412	NURBS:NO KNOT COMMAND (M series)	No knot is specified. Alternatively, in NURBS interpolation mode, a block not relating to NURBS interpolation is specified.
5413	NURBS:ILLEGAL AXIS COMMAND (M series)	An axis not specified with controlled points is specified in the first block.
5414	NURBS:ILLEGAL KNOT (M series)	The number of blocks containing knots only is insufficient.
5415	NURBS:ILLEGAL CANCEL (M series)	Although NURBS interpolation is not completed yet, the NURBS interpolation mode is turned off.
5416	NURBS:ILLEGAL MODE (M series)	A mode that cannot be used with NURBS interpolation mode is specified in NURBS interpolation mode.
5417	NURBS:ILLEGAL MULTI–KNOT (M series)	As many knots as the number of steps are not specified at the start and end points.
5418	NURBS:ILLEGAL KNOT VALUE (M series)	Knots do not increase in monotone.
5420	ILLEGAL PARAMETER IN G43.4/ G43.5 (M series)	A parameter related to pivot tool length compensation is incorrect.
5421	ILLEGAL COMMAND IN G43.4/ G43.5 (M series)	In pivot tool length compensation (type 2) mode, a rotation axis is specified.
5422	EXCESS VELOCITY IN G43.4/G43.5 (M series)	As a result of pivot tool length compensation, an attempt was made to move the tool along an axis at a feedrate exceeding the maximum cutting feedrate.
5425	ILLEGAL OFFSET VALUE (M series)	The offset number is incorrect.
5430	ILLEGAL COMMAND IN 3–D CIR (M series)	In a modal state in which three–dimensional circular interpolation cannot be specified, a three–dimensional circular interpolation (G02.4/G03.4) is specified. Alternatively, in three–dimensional circular interpolation mode, a code that cannot be specified is specified.
5432	G02.4/G03.4 FORMAT ERROR (M series)	A three–dimensional circular interpolation command (G02.4/G03.4) is incorrect.
5433	MANUAL INTERVENTION IN 3–D CIR (M series)	In three–dimensional circular interpolation mode (G02.4/G03.4), manual intervention was made when the manual absolute switch was on.
5435	PARAMETER OUT OF RANGE (TLAC) (M series)	Incorrect parameter setting (set value range)
5436	PARAMETER SETTING ERROR 1 (TLAC) (M series)	Incorrect parameter setting (setting of the rotation axis)
5437	PARAMETER SETTING ERROR 2 (TLAC) (M series)	Incorrect parameter setting (setting of the tool axis)
5440	ILLEGAL DRILLING AXIS SELECTED (M series)	The drilling axis specified for the drilling canned cycle is incorrect. The G code command block of the canned cycle does not specify the Z point of the drilling axis. When there is a parallel axis with the drilling axis, the parallel axis is also specified at the same time.

Number	Message	Contents
5445	CRC:MOTION IN G39 (M series)	Corner circular interpolation (G39) of cutter compensation is not specified alone but is specified with a move command.
5446	CRC:NO AVOIDANCE (M series)	Because there is no interference evade vector, the interference check evade function of cutter compensation cannot evade interference.
5447	CRC:DANGEROUS AVOIDANCE (M series)	The interference check evade function of cutter compensation determines that an evade operation will lead to danger.
5448	CRC:INTERFERENCE TO AVD. (M series)	In the interference check evade function of cutter compensation, a further interference occurs for an already created interference evade vector.
5452	IMPROPER G–CODE (5AXIS MODE) (M series)	A G code that cannot be specified is found. (5–axis mode) This alarm is issued when: 1) Three–dimensional cutter compensation (side–face offset and leading–edge offset) is applied during cutter compensation, or cutter compensation is applied during three–dimensional cutter compensation (side–face offset and leading–edge offset). 2) A leading–edge offset of three–dimensional cutter compensation is applied during side–face offsetting of three–dimensional cutter compensation, or a side–face offset of three–dimensional cutter compensation is applied during leading–edge offsetting of three–dimensional cutter compensation. 3) Tool axis direction tool length compensation is applied during tool length compensation, or tool length compensation is applied during tool axis direction tool length compensation. 4) Tool center point control is provided during tool length compensation, or tool length compensation is applied during tool center point control. 5) Tool center point control is provided during tool axis direction tool length compensation, or tool axis direction tool length compensation is applied during tool center point control. If this alarm is issued, cancel the relevant mode, then specify a different mode.
5453	NOTE: G68 IS CANCELED (HPCC) (M series)	When bit 2 of parameter No. 5400 is set to 1, and a reset does not cancel G68, this alarm is issued at the time of program restart. To release this alarm, press <RESET> and <CAN>. Once this operation is performed, the alarm will not be issued at the next restart.
5455	ILLEGAL ACC. PARAMETER (M series)	A permissible acceleration parameter for optimum torque acceleration/deceleration is incorrect. The cause is one of the following: 1) The ratio of the deceleration rate to the acceleration rate is below the limit. 2) The time required for deceleration to a speed of 0 exceeds the maximum value.

NOTE
HPCC designates High Precision Contour Control.
AICC designates AI Contour Control.

(2) Background edit alarm

Number	Message	Contents
???	BP/S alarm	BP/S alarm occurs in the same number as the P/S alarm that occurs in ordinary program edit. (070, 071, 072, 073, 074 085,086,087 etc.)
140	BP/S alarm	It was attempted to select or delete in the background a program being selected in the foreground. **(Note)** Use background editing correctly.

NOTE
Alarm in background edit is displayed in the key input line of the background edit screen instead of the ordinary alarm screen and is resettable by any of the MDI key operation.

(3) Absolute pulse coder (APC) alarm

Number	Message	Contents
300	APC alarm: nth–axis origin return	Manual reference position return is required for the nth–axis (n=1 – 8).
301	APC alarm: nth–axis communication	nth–axis (n=1 – 8) APC communication error. Failure in data transmission Possible causes include a faulty APC, cable, or servo interface module.
302	APC alarm: nth–axis over time	nth–axis (n=1 – 8) APC overtime error. Failure in data transmission. Possible causes include a faulty APC, cable, or servo interface module.
303	APC alarm: nth–axis framing	nth–axis (n=1 – 8) APC framing error. Failure in data transmission. Possible causes include a faulty APC, cable, or servo interface module.
304	APC alarm: nth–axis parity	nth–axis (n=1 – 8) APC parity error. Failure in data transmission. Possible causes include a faulty APC, cable, or servo interface module.
305	APC alarm: nth–axis pulse error	nth–axis (n=1 – 8) APC pulse error alarm. APC alarm.APC or cable may be faulty.
306	APC alarm: nth–axis battery voltage 0	nth–axis (n=1 – 8) APC battery voltage has decreased to a low level so that the data cannot be held. APC alarm. Battery or cable may be faulty.
307	APC alarm: nth–axis battery low 1	nth–axis (n=1 – 8) axis APC battery voltage reaches a level where the battery must be renewed. APC alarm. Replace the battery.
308	APC alarm: nth–axis battery low 2	nth–axis (n=1 – 8) APC battery voltage has reached a level where the battery must be renewed (including when power is OFF). APC alarm .Replace battery.
309	APC ALARM: n AXIS ZRN IMPOSSIBL	Return to the origin has been attempted without first rotating the motor one or more times. Before returning to the origin, rotate the motor one or more times then turn off the power.

(4) Inductsyn alarms

Number	Message	Description
330	INDUCTOSYN:DATA ALARM	The absolute–position data (offset data) from Inductosyn cannot be detected.
331	INDUCTOSYN:ILLEGAL PRM	Parameter No. 1874, 1875, or 1876 is set to 0.

(5) Serial pulse coder (SPC) alarms

No.	Message	Description
360	n AXIS : ABNORMAL CHECKSUM (INT)	A checksum error occurred in the built–in pulse coder.
361	n AXIS : ABNORMAL PHASE DATA (INT)	A phase data error occurred in the built–in pulse coder.
362	n AXIS : ABNORMAL REV.DATA (INT)	A rotation speed count error occurred in the built–in pulse coder.
363	n AXIS : ABNORMAL CLOCK (INT)	A clock error occurred in the built–in pulse coder.
364	n AXIS : SOFT PHASE ALARM (INT)	The digital servo software detected invalid data in the built–in pulse coder.
365	n AXIS : BROKEN LED (INT)	An LED error occurred in the built–in pulse coder.
366	n AXIS : PULSE MISS (INT)	A pulse error occurred in the built–in pulse coder.
367	n AXIS : COUNT MISS (INT)	A count error occurred in the built–in pulse coder.
368	n AXIS : SERIAL DATA ERROR (INT)	Communication data from the built–in pulse coder cannot be received.
369	n AXIS : DATA TRANS. ERROR (INT)	A CRC or stop bit error occurred in the communication data being received from the built–in pulse coder.
380	n AXIS : BROKEN LED (EXT)	The LED of separate detector is erroneous.
381	n AXIS : ABNORMAL PHASE (EXT LIN)	A phase data error occurred in the separate linear scale.
382	n AXIS : COUNT MISS (EXT)	A pulse error occurred in the separate detector.
383	n AXIS : PULSE MISS (EXT)	A count error occurred in the separate detector.
384	n AXIS : SOFT PHASE ALARM (EXT)	The digital servo software detected invalid data in the separate detector.
385	n AXIS : SERIAL DATA ERROR (EXT)	Communication data from the separate detector cannot be received.
386	n AXIS : DATA TRANS. ERROR (EXT)	A CRC or stop bit error occurred in the communication data being received from the separate detector.
387	n AXIS : ABNORMAL ENCODER (EXT)	An error occurs in the separate detector. For details, contact the manufacturer of the scale.

- **The details of serial pulse coder alarm**

The details of serial pulse coder alarm are displayed in the diagnosis display (No. 202 and No.203) as shown below.

	#7	#6	#5	#4	#3	#2	#1	#0
202		CSA	BLA	PHA	PCA	BZA	CKA	SPH

#6 (CSA) : The serial pulse coder is defective. Replace it.

#5 (BLA) : The battery voltage is low. Replace the batteries.

#4 (PHA) : The serial pulse coder or feedback cable is defective. Replace the serial pulse coder or cable.

#3 (PCA) : The serial pulse coder is defective. Replace it.

#2 (BZA) : The pulse coder was supplied with power for the first time.
Make sure that the batteries are connected.
Turn the power off, then turn it on again and perform a reference position return.

#1 (CKA) : The serial pulse coder is defective. Replace it.

#0 (SPH) : The serial pulse coder or feedback cable is defective. Replace the serial pulse coder or cable.

	#7	#6	#5	#4	#3	#2	#1	#0
203	DTE	CRC	STB	PRM				

#7 (DTE) : The serial pulse coder encountered a communication error.
The pulse coder, feedbak cable, or feedback receiver circuit is defective.
Replace the pulse coder, feedback cable, or NC–axis board

#6 (CRC) : The serial pulse coder encountered a communication error.
The pulse coder, feedback cable, or feedback receiver circuit is defective.
Replace the pulse coder, feedback cable, or NC–axis board.

#5 (STB) : The serial pulse coder encountered a communication error.
The pulse coder, feedback cable, or feedback receiver circuit is defective.
Replace the pulse coder, feedback cable, or NC–axis board.

#4 (PRM) : An invalid parameter was found. Alarm No. 417 (invalid servo parameter) is also issued.

(6) Servo alarms(1/2)

Number	Message	Contents
401	SERVO ALARM: n–TH AXIS VRDY OFF	The n–th axis (axis 1–8) servo amplifier READY signal (DRDY) went off. Refer to procedure of trouble shooting.
402	SERVO ALARM: SV CARD NOT EXIST	The axis control card is not provided.
403	SERVO ALARM: CARD/SOFT MISMATCH	The combination of the axis control card and servo software is illegal. The possible causes are as follows: · A correct axis control card is not provided. · Correct servo software is not installed on flash memory.
404	SERVO ALARM: n–TH AXIS VRDY ON	Even though the n–th axis (axis 1–8) READY signal (MCON) went off, the servo amplifier READY signal (DRDY) is still on. Or, when the power was turned on, DRDY went on even though MCON was off. Check that the servo interface module and servo amp are connected.
405	SERVO ALARM: (ZERO POINT RETURN FAULT)	Position control system fault. Due to an NC or servo system fault in the reference position return, there is the possibility that reference position return could not be executed correctly. Try again from the manual reference position return.
407	SERVO ALARM: EXCESS ERROR	The following error occurred during simple synchronous control: The difference in machine coordinates between the synchronized axes exceeds the value set in parameter No. 8314.
409	SERVO ALARM: n AXIS TORQUE ALM	Abnormal servo motor load has been detected. Alternatively, abnormal spindle motor load has been detected in Cs mode.
410	SERVO ALARM: n–TH AXIS – EXCESS ERROR	One of the following errors occurred: 1) The positional deviation value when the n–th axis stops exceeds the value set in parameter No. 1829. 2) In simple synchronous control, the compensation amount for synchronization exceeds the value set in parameter No. 8325. This alarm is issued only for the slave axis.
411	SERVO ALARM: n–TH AXIS – EXCESS ERROR	The position deviation value when the n–th axis (axis 1–8) moves is larger than the set value. Refer to procedure of trouble shooting.
413	SERVO ALARM: n–th AXIS – LSI OVERFLOW	The contents of the error register for the n–th axis (axis 1–8) exceeded $\pm 2^{31}$ power. This error usually occurs as the result of an improperly set parameters.

Number	Message	Contents
415	SERVO ALARM: n–TH AXIS – EXCESS SHIFT	A speed higher than 524288000 units/s was attempted to be set in the n–th axis (axis 1–8). This error occurs as the result of improperly set CMR.
417	SERVO ALARM: n–TH AXIS – PARAMETER INCORRECT	This alarm occurs when the n–th axis (axis 1–8) is in one of the conditions listed below. (Digital servo system alarm) 1) The value set in Parameter No. 2020 (motor form) is out of the specified limit. 2) A proper value (111 or –111) is not set in parameter No.2022 (motor revolution direction). 3) Illegal data (a value below 0, etc.) was set in parameter No. 2023 (number of speed feedback pulses per motor revolution). 4) Illegal data (a value below 0, etc.) was set in parameter No. 2024 (number of position feedback pulses per motor revolution). 5) Parameters No. 2084 and No. 2085 (flexible field gear rate) have not been set. 6) A value outside the limit of {1 to the number of control axes} or a non–continuous value (Parameter 1023 (servo axis number) contains a value out of the range from 1 to the number of axes, or an isolated value (for example, 4 not prceded by 3).was set in parameter No. 1023 (servo axisnumber). 7) A torque control parameter is set incorrectly in PMC axis control. (The torque constant parameter is set to 0.)
420	SERVO ALARM: n AXIS SYNC TORQUE (M series)	During simple synchronous control, the difference between the torque commands for the master and slave axes exceeded the value set in parameter No. 2031.
421	SERVO ALARM: n AXIS EXCESS ER (D)	The difference between the errors in the semi–closed loop and closed loop has become excessive during dual position feedback. Check the values of the dual position conversion coefficients in parameters No. 2078 and 2079.
422	SERVO ALARM: n AXIS	In torque control of PMC axis control, a specified allowable speed has been exceeded.
423	SERVO ALARM: n AXIS	In torque control of PMC axis control, the parameter–set allowable cumulative travel distance has been exceeded.
430	n AXIS : SV. MOTOR OVERHEAT	A servo motor overheat occurred.
431	n AXIS : CNV. OVERLOAD	1) PSM: Overheat occurred. 2) β series SVU: Overheat occurred.
432	n AXIS : CNV. LOW VOLT CONTROL	1) PSM: Control power voltage has dropped. 2) PSMR: The control power supply voltage has dropped. 3) β series SVU: The control power supply voltage has dropped.
433	n AXIS : CNV. LOW VOLT DC LINK	1) PSM: The DC link voltage has dropped. 2) PSMR: The DC link voltage has dropped. 3) α series SVU: The DC link voltage has dropped. 4) β series SVU: The DC link voltage has dropped.
434	n AXIS : INV. LOW VOLT CONTROL	SVM: The control power supply voltage has dropped.
435	n AXIS : INV. LOW VOLT DC LINK	SVM: The DC link voltage has dropped.
436	n AXIS : SOFTTHERMAL (OVC)	The digital servo software detected the soft thermal state (OVC).
437	n AXIS : CNV. OVERCURRENT POWER	PSM: Overcurrent flowed into the input circuit.

Number	Message	Contents
438	n AXIS : INV. ABNORMAL CURRENT	1) SVM: The motor current is too high. 2) α series SVU: The motor current is too high. 3) β series SVU: The motor current is too high.
439	n AXIS : CNV. OVERVOLT POWER	1) PSM: The DC link voltage is too high. 2) PSMR: The DC link voltage is too high. 3) α series SVU: The C link voltage is too high. 4) β series SVU: The link voltage is too high.
440	n AXIS : CNV. EX DECELERATION POW.	1) PSMR: The regenerative discharge amount is too large. 2) α series SVU: The regenerative discharge amount is too large. Alternatively, the regenerative discharge circuit is abnormal.
441	n AXIS : ABNORMAL CURRENT OFFSET	The digital servo software detected an abnormality in the motor current detection circuit.
442	n AXIS : CNV. CHARGE FAILURE	1) PSM: The spare discharge circuit of the DC link is abnormal. 2) PSMR: The spare discharge circuit of the DC link is abnormal.
443	n AXIS : CNV. COOLING FAN FAILURE	1) PSM: The internal stirring fan failed. 2) PSMR: The internal stirring fan failed. 3) β series SVU: The internal stirring fan failed.
444	n AXIS : INV. COOLING FAN FAILURE	SVM: The internal stirring fan failed.
445	n AXIS : SOFT DISCONNECT ALARM	The digital servo software detected a broken wire in the pulse coder.
446	n AXIS : HARD DISCONNECT ALARM	A broken wire in the built–in pulse coder was detected by hardware.
447	n AXIS : HARD DISCONNECT (EXT)	A broken wire in the separate detector was detected by hardware.
448	n AXIS : UNMATCHED FEEDBACK ALARM	The sign of feedback data from the built–in pulse coder differs from that of feedback data from the separate detector.
449	n AXIS : INV. IPM ALARM	1) SVM: IPM (intelligent power module) detected an alarm. 2) α series SVU: IPM (intelligent power module) detected an alarm.
453	n AXIS : SPC SOFT DISCONNECT ALARM	Software disconnection alarm of the α pulse coder. Turn off the power to the CNC, then remove and insert the pulse coder cable. If this alarm is issued again, replace the pulse coder.
456	ILLEGAL CURRENT LOOP	The current control cycle settings (parameter No. 2004, bit 0 of parameter No. 2003, and bit 0 of parameter No. 2013) are incorrect. Possible problems are as follows. – For the two axes whose servo axis numbers (settings of parameter No. 1023) are an odd number followed by an even number (a pair of axes 1 and 2 or axes 5 and 6, for example), a different current control cycle is set for each of the axes. – The requirements for slaves needed for the set current control cycle, including the number, type, and connection method of them, are not satisfied.
457	ILLEGAL HI HRV (250US)	Use of high–speed HRV is specified although the current control cycle is 200 μs.
458	CURRENT LOOP ERROR	The current control cycle setting does not match the actual current control cycle.
459	HI HRV SETTING ERROR	Of two axes having adjacent servo axis numbers (parameter No. 1023), odd number and even number, high–speed HRV control can be performed for one axis and not for the other.

Number	Message	Contents
460	n AXIS : FSSB DISCONNECT	FSSB communication was disconnected suddenly. The possible causes are as follows: 1) The FSSB communication cable was disconnected or broken. 2) The power to the amplifier was turned off suddenly. 3) A low–voltage alarm was issued by the amplifier.
461	n AXIS : ILLEGAL AMP INTERFACE	The axes of the 2–axis amplifier were assigned to the fast type interface.
462	n AXIS : SEND CNC DATA FAILED	Because of an FSSB communication error, a slave could not receive correct data.
463	n AXIS : SEND SLAVE DATA FAILED	Because of an FSSB communication error, the servo system could not receive correct data.
464	n AXIS : WRITE ID DATA FAILED	An attempt was made to write maintenance information on the amplifier maintenance screen, but it failed.
465	n AXIS : READ ID DATA FAILED	At power–up, amplifier initial ID information could not be read.
466	n AXIS : MOTOR/AMP COMBINATION	The maximum current rating for the amplifier does not match that for the motor.
467	n AXIS : ILLEGAL SETTING OF AXIS	The servo function for the following has not been enabled when an axis occupying a single DSP (corresponding to two ordinary axes) is specified on the axis setting screen. 1. Learning control (bit 5 of parameter No. 2008 = 1) 2. High–speed current loop (bit 0 of parameter No. 2004 = 1) 3. High–speed interface axis (bit 4 of parameter No. 2005 = 1)
468	HI HRV SETTING ERROR(AMP)	Use of high–speed HRV is specified for a controlled axis of an amplifier which does not support high–speed HRV.

- **Details of servo alarm**

The details of servo alarm are displayed in the diagnosis display (No. 200 and No.204) as shown below.

	#7	#6	#5	#4	#3	#2	#1	#0
200	OVL	LV	OVC	HCA	HVA	DCA	FBA	OFA

#7 (OVL) : An overload alarm is being generated.
(The details are indicated in diagnostic data No.201).

#6 (LV) : A low voltage alarm is being generated in servo amp.
Check LED.

#5 (OVC) : A overcurrent alarm is being generated inside of digital servo.

#4 (HCA) : An abnormal current alarm is being generated in servo amp.
Check LED.

#3 (HVA) : An overvoltage alarm is being generated in servo amp.
Check LED.

#2 (DCA) : A regenerative discharge circuit alarm is being generated in servo amp.
Check LED.

#1 (FBA) : A disconnection alarm is being generated.
(The details are indicated in diagnostic data No. 201)

#0 (OFA) : An overflow alarm is being generated inside of digital servo.

	#7	#6	#5	#4	#3	#2	#1	#0
201	ALD			EXP				

When OVL equal 1 in diagnostic data No.200 (servo alarm No. 400 is being generated):

#7 (ALD) 0 : Motor overheating
1 : Amplifier overheating

When FBAL equal 1 in diagnostic data No.200 (servo alarm No. 416 is being generated):

ALD	EXP	Alarm details
1	0	Built–in pulse coder disconnection (hardware)
1	1	Separately installed pulse coder disconnection (hardware)
0	0	Pulse coder is not connected due to software.

	#7	#6	#5	#4	#3	#2	#1	#0
204		OFS	MCC	LDA	PMS			

#6 (OFS) : A current conversion error has occured in the digital servo.
#5 (MCC) : A magnetic contactor contact in the servo amplifier has welded.
#4 (LDA) : The LED indicates that serial pulse coder C is defective
#3 (PMS) : A feedback pulse error has occured because the feedback cable is defective.

(7) Over travel alarms

Number	Message	Contents
500	OVER TRAVEL : +n	Exceeded the n–th axis (axis 1–8) + side stored stroke check I. (Parameter No.1320 or 1326 **NOTE)**
501	OVER TRAVEL : –n	Exceeded the n–th axis (axis 1–8) – side stored stroke check I. (Parameter No.1321 or 1327 **NOTE)**
502	OVER TRAVEL : +n	Exceeded the n–th axis (axis 1–8) + side stored stroke check II. (Parameter No.1322)
503	OVER TRAVEL : –n	Exceeded the n–th axis (axis 1–8) – side stored stroke check II. (Parameter No.1323)
504	OVER TRAVEL : +n	Exceeded the n–th axis (axis 1–8) + side stored stroke check III. (Parameter No.1324)
505	OVER TRAVEL : –n	Exceeded the n–th axis (axis 1–8) – side stored stroke check III. (Parameter No.1325)
506	OVER TRAVEL : +n	Exceeded the n–th axis (axis 1–8) + side hardware OT.
507	OVER TRAVEL : –n	Exceeded the n–th axis (axis 1–8) – side hardware OT.
508	INTERFERENCE: +n (T series (two–path control))	A tool moving in the positive direction along the n axis has fouled another tool post.
509	INTERFERENCE: –n (T series (two–path control))	A tool moving in the negative direction along the n axis has fouled another tool post.
510	OVER TRAVEL: +n	Alarm for stroke check prior to movement. The end point specified in a block falls within the forbidden area defined with the stroke check in the positive direction along the N axis. Correct the program.
511	OVER TRAVEL: –n	Alarm for stroke check prior to movement. The end point specified in a block falls within the forbidden area defined with the stroke check in the negative direction along the N axis. Correct the program.

Number	Message	Contents
514	INTERFERENCE : +n	The rotation area interference check function found interference on the plus side of the n axis.
515	INTERFERENCE : –n	The rotation area interference check function found interference on the minus side of the n axis.

NOTE
Parameters 1326 and 1327 are effective when EXLM(stroke check switch signal) is on.

(8) Servo alarms

Number	Message	Contents
600	n AXIS: INV. DC LINK OVER CURRENT	DC link current is too large.
601	n AXIS: INV. RADIATOR FAN FAILURE	The external dissipator stirring fan failed.
602	n AXIS: INV. OVERHEAT	The servo amplifier was overheated.
603	n AXIS: INV. IPM ALARM(OH)	The IPM (intelligent power module) detected an overheat alarm.
604	n AXIS: AMP. COMMUNICATION ERROR	Communication between the SVM and the PSM failed.
605	n AXIS: CNV. EX. DISCHARGE POW.	PSMR: Regenerative power is too large.
606	n AXIS: CNV. RADIATOR FAN FAILURE	PSM: The external dissipator stirring fan failed. PSMR: The external dissipator stirring fan failed.
607	n AXIS: CNV. SINGLE PHASE FAILURE	PSM: Input voltage is in the open–phase condition. PSMR: Input voltage is in the open–phase condition.

(9) Overheat alarms

Number	Message	Contents
700	OVERHEAT: CONTROL UNIT	Control unit overheat Check that the fan motor operates normally, and clean the air filter.
701	OVERHEAT: FAN MOTOR	The fan motor on the top of the cabinet for the contorl unit is overheated. Check the operation of the fan motor and replace the motor if necessary.
704	OVERHEAT: SPINDLE	Spindle overheat in the spindle fluctuation detection (1) If the cutting load is heavy, relieve the cutting condition. (2) Check whether the cutting tool is share. (3) Another possible cause is a faulty spindle amp.

(10)Rigid tapping alarms

Number	Message	Contents
740	RIGID TAP ALARM: EXCESS ERROR	The positional deviation of the stopped spindle has exceeded the set value during rigid tapping.
741	RIGID TAP ALARM: EXCESS ERROR	The positional deviation of the moving spindle has exceeded the set value during rigid tapping.
742	RIGID TAP ALARM: LSI OVERFLOW	An LSI overflow has occurred for the spindle during rigid tapping.

(11) Serial spindle alarms

Number	Message	Contents
749	S–SPINDLE LSI ERROR	It is serial communication error while system is executing after power supply on. Following reasons can be considered. 1) Optical cable connection is fault or cable is not connected or cable is cut. 2) MAIN CPU board or option 2 board is fault. 3) Spindle amp. printed board is fault. 4) The spindle amplifier is under an abnormal condition. (The SPM indication is A, A1, A2, or the like, depending on the type of the abnormality.) If this alarm occurs when CNC power supply is turned on or when this alarm can not be cleared even if CNC is reset, turn off the power supply also turn off the power supply in spindle side. If the spindle amplifier is under an abnormal condition, check the SPM indication (A, A1, A2, or the like). Then, refer to the FANUC SERVO MOTOR αi series MAINTENANCE MANUAL (B–65285EN) or FANUC SERVO MOTOR α series MAINTENANCE MANUAL (B–65165E) to solve the problem.
750	SPINDLE SERIAL LINK START FAULT	This alarm is generated when the spindle control unit is not ready for starting correctly when the power is turned on in the system with the serial spindle. The four reasons can be considered as follows: 1) An improperly connected optic cable, or the spindle control unit's power is OFF. 2) When the NC power was turned on under alarm conditions other than SU–01 or AL–24 which are shown on the LED display of the spindle control unit. In this case, turn the spindle amplifier power off once and perform startup again. 3) Other reasons (improper combination of hardware) This alarm does not occur after the system including the spindle control unit is activated. 4) The second spindle (when SP2, bit 4 of parameter No. 3701, is 1) is in one of the above conditions 1) to 3). See diagnostic display No. 409 for details.
752	FIRST SPINDLE MODE CHANGE FAULT	This alarm is generated if the system does not properly terminate a mode change. The modes include the Cs contouring, spindle positioning, rigid tapping, and spindle control modes. The alarm is activated if the spindle control unit does not respond correctly to the mode change command issued by the NC.
754	SPINDLE–1 ABNORMAL TORQUE ALM	Abnormal first spindle motor load has been detected.
762	SECOND SPINDLE MODE CHANGE FAULT	Refer to alarm No. 752.(For 2nd axis)
764	SPINDLE–2 ABNORMAL TORQUE ALM	Same as alarm No. 754 (for the second spindle)
772	SPINDLE–3 MODE CHANGE ERROR	Same as alarm No. 752 (for the third spindle)
774	SPINDLE–3 ABNORMAL TORQUE ALM	Same as alarm No. 754 (for the third spindle)
782	SPINDLE–4 MODE CHANGE ERROR	Same as alarm number 752 (for the fourth spindle)
784	SPINDLE–4 ABNORMAL TORQUE ALM	Same as alarm number 754 (for the fourth spindle)

- **The details of spindle alarm No.750**

- **1st and 2nd spindles**

	#7	#6	#5	#4	#3	#2	#1	#0
409					SPE	S2E	S1E	SHE

#3 (SPE) 0 : In the spindle serial control, the serial spindle parameters fulfill the spindle unit startup conditions.

1 : In the spindle serial control, the serial spindle parameters do not fulfill the spindle unit startup conditions.

#2 (S2E) 0 : The second spindle is normal during the spindle serial control startup.

1 : The second spindle was detected to have a fault during the spindle serial control startup.

#1 (S1E) 0 : The first spindle is normal during the spindle serial control startup.

1 : The first spindle was detected to have a fault during the spindle axis serial control startup.

#0 (SHE) 0 : The serial communications module in the CNC is normal.

1 : The serial communications module in the CNC was detected to have a fault.

- **3rd and 4th spindles**

The details of spindle alarm No. 750 are displayed in the diagnosis display (No. 409) as shown below.

	#7	#6	#5	#4	#3	#2	#1	#0
409					SPE	S4E	S3E	SHE

#3 (SPE) 0 : In the spindle serial control, the serial spindle parameters fulfill the spindle unit startup conditions.

1 : In the spindle serial control, the serial spindle parameters do not fulfill the spindle unit startup conditions.

#2 (S2E) 0 : The fourth spindle is normal during the spindle serial control startup.

1 : The fourth spindle was detected to have a fault during the spindle serial control startup.

#1 (S1E) 0 : The third spindle is normal during the spindle serial control startup.

1 : The third spindle was detected to have a fault during the spindle axis serial control startup.

#0 (SHE) 0 : The serial communications module in the CNC is normal.

1 : The serial communications module in the CNC was detected to have a fault.

(12)Safety zone alarms

Number	Message	Contents
4800	ZONE : PUNCHING INHIBITED 1	When a safety zone check was executed, a punch command was specified in area 1 where punching is inhibited.
4801	ZONE : PUNCHING INHIBITED 2	When a safety zone check was executed, a punch command was specified in area 2 where punching is inhibited.
4802	ZONE : PUNCHING INHIBITED 3	When a safety zone check was executed, a punch command was specified in area 3 where punching is inhibited.
4803	ZONE : PUNCHING INHIBITED 4	When a safety zone check was executed, a punch command was specified in area 4 where punching is inhibited.
4810	ZONE : ENTERING INHIBITED 1 +X	When a safety zone check was executed, the machine moving in the positive X direction entered area 1 into which entry is inhibited.
4811	ZONE : ENTERING INHIBITED 1 –X	When a safety zone check was executed, the machine moving in the negative X direction entered area 1 into which entry is inhibited.
4812	ZONE : ENTERING INHIBITED 2 +X	When a safety zone check was executed, the machine moving in the positive X direction entered area 2 into which entry is inhibited.
4813	ZONE : ENTERING INHIBITED 2 –X	When a safety zone check was executed, the machine moving in the negative X direction entered area 2 into which entry is inhibited.
4814	ZONE : ENTERING INHIBITED 3 +X	When a safety zone check was executed, the machine moving in the positive X direction entered area 3 into which entry is inhibited.
4815	ZONE : ENTERING INHIBITED 3 –X	When a safety zone check was executed, the machine moving in the negative X direction entered area 3 into which entry is inhibited.
4816	ZONE : ENTERING INHIBITED 4 +X	When a safety zone check was executed, the machine moving in the positive X direction entered area 4 into which entry is inhibited.
4817	ZONE : ENTERING INHIBITED 4 –X	When a safety zone check was executed, the machine moving in the negative X direction entered area 4 into which entry is inhibited.
4830	ZONE : ENTERING INHIBITED 1 +Y	When a safety zone check was executed, the machine moving in the positive X direction entered area 1 into which entry is inhibited.
4831	ZONE : ENTERING INHIBITED 1 –Y	When a safety zone check was executed, the machine moving in the negative Y direction entered area 1 into which entry is inhibited.
4832	ZONE : ENTERING INHIBITED 2 +Y	When a safety zone check was executed, the machine moving in the positive Y direction entered area 2 into which entry is inhibited.
4833	ZONE : ENTERING INHIBITED 2 –Y	When a safety zone check was executed, the machine moving in the negative Y direction entered area 2 into which entry is inhibited.
4834	ZONE : ENTERING INHIBITED 3 +Y	When a safety zone check was executed, the machine moving in the positive Y direction entered area 3 into which entry is inhibited.
4835	ZONE : ENTERING INHIBITED 3 –Y	When a safety zone check was executed, the machine moving in the negative Y direction entered area 3 into which entry is inhibited.
4836	ZONE : ENTERING INHIBITED 4 +Y	When a safety zone check was executed, the machine moving in the positive Y direction entered area 4 into which entry is inhibited.
4837	ZONE : ENTERING INHIBITED 4 –Y	When a safety zone check was executed, the machine moving in the negative Y direction entered area 4 into which entry is inhibited.
4870	AUTO SETTING FEED ERROR	The feed rate of safety zone auto setting is other than the parameter value (No. 16538, No. 16539).

Number	Message	Contents
4871	AUTO SETTING PIECES ERROR	In safety zone auto setting, the safety zone pieces are not correct. Or the position detector has gone wrong, please tell your machine tool builder.
4872	AUTO SETTING COMMAND ERROR	M code, S code or T code is specified with safety zone auto setting command (G32). G32 is specified in the nibbling mode, in the cutter compensation, in the rotation mode or the scaling mode.

(13) System alarms (These alarms cannot be reset with reset key.)

Number	Message	Description
900	ROM PARITY	A parity error occurred in the CNC, macro, or servo ROM. Correct the contents of the flash ROM having the displayed number.
910	SRAM PARITY : (BYTE 0)	A RAM parity error occurred in the part program storage RAM. Clear the RAM, or replace the SRAM module or motherboard. Subsequently, re–set the parameters and all other data.
911	SRAM PARITY : (BYTE 1)	
912	DRAM PARITY : (BYTE 0)	A RAM parity error occurred in the DRAM module. Replace the DRAM module.
913	DRAM PARITY : (BYTE 1)	
914	DRAM PARITY : (BYTE 2)	
915	DRAM PARITY : (BYTE 3)	
916	DRAM PARITY : (BYTE 4)	
917	DRAM PARITY : (BYTE 5)	
918	DRAM PARITY : (BYTE 6)	
919	DRAM PARITY : (BYTE 7)	
920	SERVO ALARM (1–4 AXIS)	Servo alarm (first to fourth axis). A watchdog alarm condition occurred, or a RAM parity error occurred in the axis control card. Replace the axis control card.
921	SERVO ALARM (5–8 AXIS)	Servo alarm (fifth to eighth axis). A watchdog alarm condition occurred, or a RAM parity error occurred in the axis control card. Replace the axis control card.
926	FSSB ALARM	FSSB alarm. Replace the axis control card.
930	CPU INTERRUPT	CPU error (abnormal interrupt). The motherboard or CPU card may be faulty.
935	SRAM ECC ERROR	An error occurred in RAM for part program storage. Action: Replace the master printed circuit board (SRAM module), perform all–clear operation, and set all parameter and other data again.
950	PMC SYSTEM ALARM PCxxx YYYYYYYYYYYYYY	An error occurred in the PMC. For details of PCxxx, see the list of system alarm messages in Section A.2, ”LIST OF ALARMS (PMC)” in this manual.
951	PMC WATCH DOG ALARM	An error occurred in the PMC. (Watchdog alarm) The motherboard may be faulty.
970	NMI OCCURRED IN PMCLSI	With the PMC–SA1, an error occurred in the PMC control LSI device on the motherboard. (I/O RAM parity) Replace the motherboard.
971	NMI OCCURRED IN SLC	With the PMC–SA1, an I/O Link disconnection was detected. Check the I/O Link.

Number	Message	Description
972	NMI OCCURRED IN OTHER MODULE	An NMI occurred on a board other than the motherboard. The option board may be faulty.
973	NON MASK INTERRUPT	An NMI occurred as a result of an unknown cause.
974	F–BUS ERROR	A bus error occurred on the FANUC bus. The motherboard or option board may be faulty.
975	BUS ERROR	A bus error occurred on the motherboard. The motherboard may be faulty.
976	L–BUS ERROR	A bus error occurred on the local bus. The motherboard may be faulty.

A.2 LIST OF ALARMS (PMC)

(1) PMC ALARMS/SYSTEM ALARMS (PMC–SB7)

Alarm number	Faulty location/corrective action	Contents
ER01 PROGRAM DATA ERROR	1) Re–input the sequence program. 2) Replace the master printed circuit board.	The sequence program is invalid.
ER02 PROGRAM SIZE OVER	1) Reduce the sequence program. 2) Contact FANUC to have a larger number–of–Ladder–steps option specified.	The sequence program is too large. The sequence program is invalid.
ER03 PROGRAM SIZE ERROR (OPTION)	1) Reduce the sequence program. 2) Contact FANUC to have a larger number–of–Ladder–steps option specified.	The sequence program exceeds the size specified by the number–of–Ladder–steps option.
ER04 PMC TYPE UNMATCH	Using an offline programmer, change the sequence program to that for the correct PMC type.	The setting of the type in the sequence program differs from the actual type.
ER06 PMC CONTROL SOFTWARE TYPE UNMATCH	Contact FANUC to specify certain PMC type	The combination of CNC system configuration and PMC type is invalid. (Example: PMC–SB5 is used for a 3–path CNC system.)
ER07 NO OPTION (LADDER STEP)	1) Restore the backed up CNC parameter data. 2) Check the data sheet and re–input the CNC parameters. 3) Contact FANUC to specify a number–of–Ladder–steps option of the necessary size.	No number–of–Ladder–steps option is found.
ER08 OBJECT UNMATCH	1) Contact FANUC.	An unsupported function is used in the sequence program.
ER09 PMC LABEL CHECK ERROR PLEASE TURN ON POWER AGAIN WITH PUSHING 'O'&'Z'. (CLEAR PMC SRAM)	1) Press and hold down the 'O' and 'Z' key combination, and turn the CNC back on. 2) When using the loader control function, power on the CNC again while pressing the "5" and "Z" keys. 3) Replace the backup battery. 4) Replace the master printed circuit board.	With a change in the PMC type, for example, the retention–type memory of the PMC must be initialized.
ER10 OPTION AREA NOTHING (xxxx)	Contact FANUC to reconfigure the PMC management software.	The PMC management software is not loaded correctly.
ER11 OPTION AREA NOTHING (xxxx)	Contact FANUC to reconfigure the PMC management software.	The PMC C board management software is not loaded correctly.

Alarm number	Faulty location/corrective action	Contents
ER12 OPTION AREA ERROR (xxxx)	Contact FANUC to reconfigure the PMC management software.	The PMC management software is invalid. (The series of BASIC and OPTION do not match.)
ER13 OPTION AREA ERROR (xxxx)	Contact FANUC to reconfigure the PMC management software.	The PMC C board management software is invalid. (The series of BASIC and OPTION do not match.)
ER14 OPTION AREA VERSION ERROR (xxxx)	Contact FANUC to reconfigure the PMC management software.	The PMC management software is invalid. (The editions of BASIC and OPTION do not match.)
ER15 OPTION AREA VERSION ERROR (xxxx)	Contact FANUC to reconfigure the PMC management software	The PMC C board management software is invalid. (The editions of BASIC and OPTION do not match.)
ER16 RAM CHECK ERROR (PROGRAM RAM)	Replace the master printed circuit board.	The initialization of the memory used to store the sequence program failed.
ER17 PROGRAM PARITY	1) Re–input the sequence program. 2) Replace the master printed circuit board.	The parity of the sequence program is invalid.
ER18 PROGRAM DATA ERROR BY I/O	Re–input the sequence program.	While the sequence program was being read, an interrupt command was generated.
ER19 LADDER DATA ERROR	Display the Ladder edit screen again and exit from editing by using the [<<] key.	During Ladder editing, the system was forcibly switched to the CNC screen with a function key.
ER20 SYMBOL/COMMENT DATA ERROR	Display the symbol/comment edit screen again and exit from editing by using the [<<] key.	During symbol/comment editing, the system was forcibly switched to the CNC screen with a function key.
ER21 MESSAGE DATA ERROR	Display the message data edit screen again and exit from editing by using the [<<] key.	During message data editing, the system was forcibly switched to the CNC screen with a function key.
ER22 PROGRAM NOTHING	1) Re–input the sequence program. 2) Replace the master printed circuit board.	The sequence program is empty.
ER23 PLEASE TURN OFF POWER	Turn the CNC off and then back on.	With a change in the PMC type, for example, the power must be turned off and then back on.
ER25 SOFTWARE VERSION ERROR (PMCAOPT)	Contact FANUC to reconfigure the PMC management software.	The PMC management software is invalid. (The edition of PMCAOPT does not match.)
ER26 PMC CONTROL MODULE ERROR (PMCAOPT)	1) Contact FANUC to reconfigure the PMC management software. 2) 2) Replace the master printed circuit board.	The initialization of the PMC management software failed.

Alarm number	Faulty location/corrective action	Contents
ER27 LADDER FUNC. PRM IS OUT OF RANGE	Modify the sequence program. Change the parameter number of the function instruction to a value within the valid range.	An out–of–range parameter number is specified with function instruction TMR, TMRB, CTR, DIFU, or DIFD.
ER32 NO I/O DEVICE	1) Check that the I/O device is on. 2) Check that the I/O device was turned on before the CNC was turned on. 3) Check the connection of the cable.	An I/O device such as the I/O Link, connection unit, and Power Mate is not connected.
ER33 I/O LINK ERROR	Replace the master printed circuit board.	The LSI of the I/O Link is defective.
ER34 I/O LINK ERROR (xx)	1) Check the connection of the cable leading to a device in group xx. 2) Check that the I/O device was turned on before the CNC. 3) Replace that device in group xx in which the PMC control module is installed.	In a slave in group xx, an error occurred in communication with an I/O device.
ER35 TOO MUCH OUTPUT DATA IN GROUP (xx)	Reduce the amount of output data in group xx.	The amount of output data in I/O Link group xx exceeds the limit (33 bytes). The excess data is nullified.
ER36 TOO MUCH INPUT DATA IN GROUP (xx)	Reduce the amount of input data in group xx	The amount of input data in I/O Link group xx exceeds the limit (33 bytes). The excess data is nullified.
ER38 MAX SETTING OUTPUT DATA OVER (xx)	Modify the total amount of output data in each group to 128 bytes or less.	The I/O Link I/O area is insufficient. (The allocation of any group after group xx on the output side is nullified.)
ER39 MAX SETTING INPUT DATA OVER (xx)	Modify the total amount of input data in each group to 128 bytes or less.	The I/O Link I/O area is insufficient. (The allocation of any group after group xx on the input side is nullified.)
ER40 I/O LINK–II SETTING ERROR (CHx)	Reconfigure the I/O Link–II.	The I/O Link–II setting is invalid. (CH1: Primary board, CH2: Secondary board)
ER41 I/O LINK–II MODE ERROR (CHx)	Reconfigure the I/O Link–II.	The I/O Link–II mode setting is invalid. (CH1: Primary board, CH2: Secondary board)
ER42 I/O LINK–II STATION NO.ERROR (CHx)	Reconfigure the I/O Link–II.	The I/O Link–II station number setting is invalid. (CH1: Primary board, CH2: Secondary board)
ER97 I/O LINK (CHxyyGROUP)	1) Check whether the cables of I/O devices in group yy are connected properly. 2) Check the power to each I/O device. 3) Check the parameter setting of the I/O link assignment data selection function.	The number of assigned I/O modules in group yy differs from that of I/O devices actually connected. Note) This alarm can control how the check function operates through the use of keep relay K906.2. K906.2 = 0: Connection check is performed (initial value). K906.2 = 1: Connection check is not performed.

Alarm number	Faulty location/corrective action	Contents
ER98 ILLEGAL LASER CONNECTION	Modify the allocation of the I/O module.	When an I/O device for a laser is used, the allocation of the I/O module does not match the actual I/O device configuration.
ER99 X,Y96–127 ARE ALLOCATED	Modify the allocation of the I/O module.	When an I/O device for a laser is used, another I/O device is allocated to X96–127/Y96–127. X96–127/Y96–127 are used for I/O devices for a laser, and cannot be used for other devices.
WN02 OPERATE ADDRESS ERROR	Modify the setting of the PMC system parameter, address of the operator's panel for Series 0.	The setting of the PMC system parameter, address of the operator's panel for Series 0, is invalid.
WN03 ABORT NC–WINDOW/EXIN	1) Check that the Ladder program is free from problems and then restart the Ladder program (by pressing the RUN key). 2) Turn the CNC off and then back on.	The Ladder program was stopped during communication between the CNC and PMC. Function instructions such as WINDR, WINDW, EXIN, and DISPB may not be executed normally.
WN05 PMC TYPE NO CONVERSION	Using an offline programmer, change the sequence program to that for the correct PMC type.	The setting of the type in the sequence program differs from the actual type. (Example: For the PMC–SB5, the Ladder program of the PMC–SA3/SA5 was transferred.)
WN06 TASK STOPPED BY DEBUG FUNC	To restart a user task that has been stopped, stop the sequence program and then execute it again.	When a PMC C board is used, a user task has been stopped due to a break by a debug function.
WN07 LADDER SP ERROR (STACK)	Modify the sequence program so that the subprogram nesting level is eight or less.	For a subprogram call with the function instruction CALL or CALLU, the nesting level is too deep (exceeds 8).
WN17 NO OPTION (LANGUAGE)	1) Restore the backed up parameter data. 2) Check the data sheet and re–input the parameters. 3) Contact FANUC to specify a PMC C program option of the necessary size.	When a PMC C board is used, no PMC C program option is found.
WN18 ORIGIN ADDRESS ERROR	1) On the PMC system parameter screen, press [ORIGIN]. 2) Set the PMC system parameter, LANGUGE ORIGIN, to the address indicated by the RC_CTLB_INIT in the map file.	When a PMC C board is used, the PMC system parameter, LANGUAGE ORIGIN, is invalid.
WN19 GDT ERROR (BASE, LIMIT)	Modify the setting in the user–defined GDT in the link control statement or build file.	When a PMC C board is used, the BASELIMIT or ENTRY in the user–defined GDT is invalid.
WN20 COMMON MEM. COUNT OVER	Change the number of shared memories to eight or less. Modify the link control statement, build file, or other source files for shared memories.	When a PMC C board is used, the number of shared memories exceeds eight.

Alarm number	Faulty location/corrective action	Contents
WN21 COMMON MEM. ENTRY ERROR	Modify the ENTRY in the shared memory GDT in the link control statement.	When a PMC C board is used, the ENTRY in the shared memory GDT is out of range.
WN22 LADDER 3 PRIORITY ERROR	Change the value of the TASK LEVEL (LADDER LEVEL 3) in the link control statement to 0, 10 to 99, or –1.	When a PMC C board is used, the priority of LADDER LEVEL 3 is out of range.
WN23 TASK COUNT OVER	Change the TASK COUNT in the link control statement to 16 or less. (To change the task count, modify the link control statement, build file, and the configuration of the files to be linked.)	When a PMC C board is used, the number of user tasks exceeds 16.
WN24 TASK ENTRY ADDR ERROR	Change the GDT table in the build file to 32 (20H) to 95 (5FH).	When a PMC C board is used, the user task entry address selector is out of range.
WN25 DATA SEG ENTRY ERROR	Change the DATA SEGMENT GDT ENTRY value in the link control statement and the GDT table in the build file to 32 (20H) to 95 (5FH).	When a PMC C board is used, the data segment entry address is out of range.
WN26 USER TASK PRIORITY ERROR	Change the TASK LEVEL of each task in the link control statement to a value from 10 to 99 or –1. (Note that –1 can be specified for the TASK LEVEL of only one task, including the third Ladder level).	When a PMC C board is used, the priority of the user task is out of range.
WN27 CODE SEG TYPE ERROR	Change the value of the code segment according to the segment setting in the link control statement and build file.	When a PMC C board is used, the code segment type is invalid. The setting of the RENA–MESEG code segment in the bind control file is wrong.
WN28 DATA SEG TYPE ERROR	Change the value of the data segment according to the segment setting in the link control statement and build file.	When a PMC C board is used, the data segment type is invalid. The setting of the RENA–MESEG data segment in the bind control file is wrong.
WN29 COMMON MEM SEG TYPE ERROR	Change the value according to the segment setting in the link control statement and build file.	When a PMC C board is used, the shared memory segment type is invalid. The setting of the RENAMESEG segment in the shared memory bind control file is wrong.
WN30 IMPOSSIBLE ALLOCATE MEM.	1) Check that the USER GDT ADDRESS in the link control statement and the start address of the code segment in the build file are correct. 2) Change the PMC system parameter, MAX LADDER AREA SIZE, to a minimum. 3) Change the stack size in the link control state to a minimum.	When a PMC C board is used, the memory area for data, stacks, and others cannot be reserved.
WN31 IMPOSSIBLE EXECUTE LIBRARY	1) Check the types supported by the library. 2) Reconfigure the PMC management software and contact FANUC.	When a PMC C board is used, library functions cannot be executed.

Alarm number	Faulty location/corrective action	Contents
WN32 LNK CONTROL DATA ERROR	1) Check that the address of RC_CTLNB_INIT is set for the PMC system parameter, LANGUAGE ORIGIN. 2) Create the link control statement again.	When a PMC C board is used, link control statement (program control) data is invalid.
WN33 LNK CONTROL VER.ERROR	Modify the link control statement in the PMC C program.	When a PMC C board is used, a link control statement data edition error has occurred.
WN34 LOAD MODULE COUNT OVER	Change the number of independent load modules to eight or less.	When a PMC C board is used, the number of independent load modules exceeds eight.
WN35 CODE AREA OUT OF RANGE	Check the link map and allocate segments within the range of RAM.	When a PMC C board is used, the code segment area is out of the range of the RAM.
WN36 LANGUAGE SIZE ERROR (OPTION)	1) Reduce the PMC C program. 2) Contact FANUC to specify a PMC C program option of a larger size.	When a PMC C board is used, the PMC C program exceeds the size specified for the PMC C program option.
WN37 PROGRAM DATA ERROR (LANG.)	Initialize the PMC C program memory. ([EDIT] → [CLEAR] → [CLRLNG] → [EXEC])	The PMC C program memory must be initialized.
WN38 RAM CHECK ERROR (LANG.)	Replace the master printed circuit board.	The initialization of the PMC C program memory failed.
WN39 PROGRAM PARITY (LANG.)	1) Re–input the PMC C program. 2) Replace the master printed circuit board.	The parity of the PMC C program parity is invalid.
WN40 PROGRAM DATA ERROR BY I/O (LANG.)	Re–input the language program.	While the PMC C program was being read, an interrupt command was generated.
WN41 LANGUAGE TYPE UNMATCH	1) Re–input the PMC C program. 2) Replace the master printed circuit board.	When a PMC C board is used, an unusable C program is input.
WN42 UNDEFINE LANGUAGE ORIGIN ADDRESS	1) On the PMC system parameter screen, click [ORIGIN]. 2) Set the PMC system parameter, LANGUGE ORIGIN, to the address indicated by the RC_CTLB_INIT in the map file.	When a PMC C board is used, the PMC parameter, LANGUAGE ORIGIN, is not set.
WN48 UNAVAIL LANGUAGE BY CNC UNMATCH	Remove the PMC C board.	A PMC C board is installed in a CNC in which a PMC C board cannot be used.

(2) Alarm messages (PMC–SA1)

Message	Contents and solution
ALARM NOTHING	Normal status
ER00 PROGRAM DATA ERROR(ROM)	The sequence program in the ROM is not written correctly. (solution) Please exchange ROM for the sequence program.
ER01 PROGRAM DATA ERROR(RAM)	The sequence program in the debugging RAM is defective. (solution) Please clear the debugging RAM and input LADDER again. The debugging RAM is not installed though the RAM is selected. (solution) Please install the debugging RAM or install ROM for sequence program and select ROM with K17#3=0.
ER02 PROGRAM SIZE OVER	The size of sequence program exceeds the maximum size of LADDER(PMC–SC only). (solution) Please change MAX LADDER AREA SIZE at the SYSPRM screen and restart the system.
ER03 PROGRAM SIZE ERROR(OPTION)	The size of sequence program exceeds the option specification size. (solution) Please increase the option specification size. Or, reduce the size of sequence program.
ER04 PMC TYPE UNMATCH	The PMC model setting of the sequence program is not corresponding to an actual model. (solution) Please change the PMC model setting by the offline programmer.
ER05 PMC MODULE TYPE ERROR	The module type of the PMC engine is not correct. (solution) Please exchange the module of PMC engine for a correct one.
ER07 NO OPTION (LADDER STEP)	There is no step number option of LADDER.
ER10 OPTION AREA NOTHING (series name)	The management software for the PMC–SB has not been transferred. (solution) The software installation is not consistent with the order. Contact FANUC.
ER11 OPTION AREA NOTHING (series name)	The management software for the PMC C board has not been transferred. (solution) The software installation is not consistent with the order. Contact FANUC.
ER12 OPTION AREA ERROR (series name)	The series of the management software for the PMC–RB differs between BASIC and OPTION. (solution) Contact FANUC.
ER13 OPTION AREA ERROR (series name)	The series of the management software for the PMC C board differs between BASIC and OPTION. (solution) Contact FANUC.
ER14 OPTION AREA VERSIION ERROR (series name)	The edition of the management software for the PMC–RB differs between BASIC and OPTION. (solution) Contact FANUC.
ER15 OPTION AREA VERSIION ERROR (series name)	The edition of the management software for the PMC C board differs between BASIC and OPTION. (solution) Contact FANUC.
ER16 RAM CHECK ERROR (PROGRAM RAM)	The debugging RAM cannot be read/written normally. (solution) Please exchange the debugging RAM.
ER17 PROGRAM PARITY	The parity error occurred on ROM for sequence program or the debugging RAM. (solution) ROM: The deterioration of ROM may be deteriorated Please exchange ROM for the sequence program RAM: Please edit the sequence program once on PMC Still the error occurs, exchange the debugging RAM.

Message	Contents and solution
ER18 PROGRAM DATA ERROR BY I/O	Transferring the sequence program from offline programmer was interrupted by the power off etc. (solution) Please clear the sequence program and transfer the sequence program again.
ER19 LADDER DATA ERROR	Editing the LADDER was interrupted by the power off or by the switch to the CNC screen by the function key etc. (solution) Please edit LADDER once on PMC. Or, please input LADDER again.
ER20 SYMBOL/COMMENT DATA ERROR	Editing the symbol and comment was interrupted by the power off or by the switch to the CNC screen by the function key etc. (solution) Please edit symbol and comment once on PMC. Or, please input symbol and comment again.
ER21 MESSAGE DATA ERROR	Editing the message data was interrupted by the power off or the switch to the CNC screen by the function key etc. (solution) Please edit message data once on PMC. Or, please input message data again.
ER22 PROGRAM NOTHING	There is no sequence program
ER23 PLEASE TURN OFF POWER	There is a change in setting LADDER MAX AREA SIZE etc. (solution) Please restart the system to make the change effective.
ER24 LADDER, LANGUAGE AREA OVERLAP	The C program area overlaps the ladder program area. (solution) Adjust the address range assigned to C programs.
ER25 SOFTWARE VERSION ERROR (PMCAOPT)	The PMC–SB management software editions are inconsistent. (solution) Contact FANUC.
ER26 SOFTWARE VERSION ERROR (PMCAOPT)	The PMC–SB management software cannot be initialized. (solution) Contact FANUC.
ER27 LADDER FUNC. PRM IS OUT OF RANGE	The parameter number for function instruction TMR, TMRB, CTR, DIFU, or DIFD is not in the range. (solution) Correct the number so that it is within the range.

*When ER00 to ER27 occur, sequence program is not available.

Message	Contents and solution
ER32 NO I/O DEVICE	Any DI/DO unit of I/O Unit or the connection unit etc. is not connected. When built–in I/O card is connected, this message is not displayed. (solution) When built–in I/O card is used: Please confirm whether the built–in I/O card is certainly connected with. When I/O Link is used: Please confirm whether the DI/DO units turning on. Or please confirm the connection of the cable.
ER33 SLC ERROR	The LSI for I/O Link is defective. (solution) Please exchange the module of PMC engine.
ER34 SLC ERROR(xx)	The communication with the DI/DO units of the xx group failed. (solution) Please confirm the connection of the cable connected to the DI/DO units of the xx group. Please confirm whether the DI/DO units turned on earlier than CNC and PMC. Or, please exchange the module of PMC engine on the DI/DO units of the xx group

Message	Contents and solution
ER35 TOO MUCH OUTPUT DATA IN GROUP(xx)	The number of the output data in the xx group exceeded the max. The data, which exceed 32 bytes, become ineffective. (solution) Please refer to the following for the number of the data for each group. “FANUC I/O Unit–MODEL A connecting and maintenance manual” (B–61813E) “FANUC I/O Unit–MODEL B connecting manual”(B–62163E)
ER36 TOO MUCH INPUT DATA IN GROUP(xx)	The number of the input data in the xx group exceeded the max. The data, which exceed 32 bytes, become ineffective. (solution) Please refer to the following for the number of the data for each group. “FANUC I/O Unit–MODEL A connecting and maintenance manual” (B–61813E) “FANUC I/O Unit–MODEL B connecting manual”(B–62163E)
ER38 MAX SETTING OUTPUT DATA OVER(xx)	The assignment data for a group exceeds 128 bytes. (The assignment data of output side of xx group or later become ineffective.) (solution) Please reduce the assignment data to 128 bytes or less for the number of the output data of each group.
ER39 MAX SETTING INPUT DATA OVER(xx)	The assignment data for a group exceeds 128 bytes. (The assignment data of input side of xx group or later become infective.) (Solution) Please reduce the assignment data to 128 bytes or less for the number of the input data of each goup.
ER98 ILLEGAL LASER CONNECTION	An I/O unit for the laser and assigned data do not match. (solution) Check that the ladder assignment data and actual I/O units match.
ER99 X, Y96–127 ARE ALLOCATED	When the laser I/O link is provided, ladder I/O is assigned to X96–X127 and Y96–Y127. (solution) Delete the data assigned to X96–X127 and Y96–Y127.
WN02 OPERATE PANEL ADDRESS ERROR	The address setting data of the operator’s panel for FS–0 is illegal. (solution) Please correct the address setting data.
WN03 ABORT NC–WINDOW/ EXIN	LADDER was stopped while CNC and PMC were communicating. The functional instruction WINDR, WINDW, EXIN, DISPB, and etc. may not work normally. (solution) When restarting the system, this alarm will be released. Execute the sequence program(Press RUN key) after confirming whether there is a problem in LADDER or not.
WN04 UNAVAIL EDIT MODULE	The LADDER editing module cannot be recognized.(PMC–SAx/SBxx=1 to 3) (solution) Please confirm the slot position installed. Please confirm the installed module.
WN05 PMC TYPE NO CONVERSION	A ladder program for the PMC–SA3/SA5 was transferred to the PMC–SB5. (solution) Correct the ladder type.
WN06 TASK STOPPED BY DEBUG FUNC	Some user tasks are stopped by break point of the debugging function.
WN07 LADDER SP ERROR (STACK)	When functional instruction CALL(SUB65) or CALLU(SUB66) was executed, the stack of the LADDER overflowed. (solution) Please reduce the nesting of the subprogram to 8 or less.
WN17 NO OPTION (LANGUAGE)	There is no C language option.
WN18 ORIGIN ADDRESS ERROR	The LANGUAGE ORIGIN address of the system parameter is wrong (solution) Please set the address of symbol RC_CTLB_INIT in the map file to the LANGUAGE ORIGIN of the system parameter.

Message	Contents and solution
WN19 GDT ERROR (BASE,LIMIT)	The value of BASE, LIMIT or ENTRY of user defined GDT is illegal. (solution) Please correct the address in link control statement and build file.
WN20 COMMON MEM. COUNT OVER	The number of common memories exceeds 8. (solution) Please reduce the number of common memories to 8 or less. It is necessary to correct a link control statement,build file and the source file for the common memory.
WN21 COMMON MEM. ENTRY ERROR	GDT ENTRY of the common memory is out of range. (solution) Please correct the address of GDT ENTRY of the common memory in the link control statement.
WN22 LADDER 3 PRIORITY ERROR	The priority of LADDER LEVEL 3 is out of range. (solution) Please correct the value of LADDER LEVEL 3 in the link control statement within the range of 0 or 10–99 or –1.
WN23 TASK COUNT OVER	The number of user tasks exceeds 16. (solution) Please confirm TASK COUNT in the link control statement. When the number of tasks is changed, it is necessary to correct the link control statement, build file and the composition of the files to be linked.
WN24 TASK ENTRY ADDR ERROR	The selector of the entry address to the user task is out of range. (solution) Please correct the table of GDT in build file to the value within 32(20H)–95(5FH).
WN25 DATA SEG ENTRY ERROR	The entry address of the data segment is out of range. (solution) Please correct DATA SEGMENT GDT ENTRY in the link control statement and the table of GDT in build file within 32(20H)–95(5FH).
WN26 USER TASK PRIORITY ERROR	The priority of the user task is out of range. (solution) Please correct the TASK LEVEL in link control statement within the range of 10–99 or –1. Note: Only one task can have TASK LEVEL –1 (including LADDER LEVEL 3).
WN27 CODE SEG TYPE ERROR	The code segment type is illegal. The code segment of RENAMESEG in the binding control file is wrong. (solution) Please correct the entry of the code segment in the link control statement to correspond to the entry in the build file.
WN28 DATA SEG TYPE ERROR	The data segment type is illegal. The data segment of RENAMESEG in the binding control file is wrong. (solution) Please correct the entry of the code segment in the link control statement to correspond to the entry in the build file.
WN29 COMMON MEM SEG TYPE ERROR	The segment type of common memory is illegal. The segment of RENAMESEG in the building control file of the common memory is wrong. (solution) Please correct the entry of common memory in the link control statement to correspond to the entry in the build file.
WN30 IMPOSSIBLE ALLOCATE MEM.	The memories for the data and stack etc. cannot be allocated. (solution) Please confirm whether the value of code segment in build file and USER GDT ADDRESS in link control statement is correct or not. Or please reduce the value of MAX LADDER AREA SIZE of the system parameter and the size of the stack in link control statement at the least
WN31 IMPOSSIBLE EXECUTE LIBRARY	The library function cannot be executed. (solution) Please confirm the object model of the library. Or, system ROM of PMC must be replaced with one of later version.

Message	Contents and solution
WN32 LNK CONTROL DATA ERROR	Link control statement data is illegal. (solution) Please confirm whether the address of symbol RC_ CTLB_INIT in map file is set to LANGUAGE ORIGIN of the system parameter. Or, please make the link control statement again.
WN33 LNK CONTROL VER. ERROR	A link control statement data version error occurred. (Solution) Correct the link control statement in the C program.
WN34 LOAD MODULE COUNT OVER	The number of independent load modules exceeds eight. (solution) Decrease the number of independent load modules to eight or smaller.
WN35 CODE AREA OUT OF RANGE	The specified code area is beyond the address range. (solution) Correct the C program.
WN36 LANGUAGE SIZE ERROR (OPTION)	The size of a C program exceeds the option size. (solution) Decrease the size of the C program.
WN37 PROGRAM DATA ERROR (LANG.)	A C program is destroyed. (solution) Transfer the C program again.
WN38 RAM CHECK ERROR (LANG.)	A C program is destroyed. (solution) Transfer the C program again.
WN39 PROGRAM PARITY (LANG.)	A parity mismatch occurred in a C program. (solution) Transfer the C program again.
WN40 PROGRAM DATA ERROR BY I/O (LANG.)	Transfer of a C program was interrupted by, for example, a power failure. (solution) Clear the C program, then transfer the C program again.
WN41 LANGUAGE TYPE UNMATCH	A C program type mismatch occurred. (solution) Correct the C program.
WN42 UNDEFINE LANGUAGE ORIGIN ADDRESS	No language origin address is set. (solution) Set the language origin address.

NOTE
Alarms WN17 to WN42 indicate errors related to PMC user C programs.

(3) System alarm messages (PMC–SB7)

	Message	Contents and solution
1	PC004 CPU ERR xxxxxxxx:yyyyyyyy PC006 CPU ERR xxxxxxxx:yyyyyyyy PC009 CPU ERR xxxxxxxx:yyyyyyyy PC010 CPU ERR xxxxxxxx:yyyyyyyy	A CPU error occurred in the PMC. xxxxxxxx and yyyyyyyy indicate internal error code. If this error occurs, the motherboard may be faulty. Replace the motherboard, then check whether the error recurs. If the error still occurs even after the replacement of the motherboard, report the conditions under which the error occurred (system configuration, operation, time and frequency of error occurrences, etc.) to FANUC.
2	PC030 RAM PARITY aa:bb	A RAM parity error occurred in the PMC. aa and bb indicate internal error code. If this error occurs, the motherboard may be faulty. Solution) Replace the motherboard, then check whether the error recurs. If the error still occurs even after the replacement of the motherboard, report the conditions under which the error occurred (system configuration, operation, time and frequency of error occurrences, etc.) and the indicated internal error code to FANUC.
3	PC050 I/OLINK(CHx) aa:bb–aa:bb or PC050 IOLINK CHx aabb– aabb:aabb	A communication error occurred in the I/O Link. CHx is channel number. aa and bb indicate internal error code. If this error occurs, the possible causes are as follows: (1) Although the base expansion is assigned when the I/O Unit A is used, the base is not connected. (2) A cable is not connected securely. (3) Cabling is faulty. (4) I/O equipment (I/O unit, Power Mate, etc.) is faulty. (5) The power to the master or slave unit of the I/O Link is disconnected. (6) A DO–pin short–circuit occurred in an I/O device. (7) The motherboard is faulty. Solution) (1) Check whether the I/O assignment data and the actual I/O equipment connection match. (2) Check whether the cables are connected correctly. (3) According to “FANUC I/O Unit–MODEL A Connection and Maintenance Manual” (B–61813E) or “FANUC I/O Unit–MODEL B Connection manual” (B–62163E), check for an error in the cable specifications. (4) Replace the I/O unit interface module, cable, or motherboard. Then, check whether the error still occurs.
4	PC060 FBUS xxxxxxxx:yyyyyyyy PC061 FL–R xxxxxxxx:yyyyyyyy PC062 FL–W aa: xxxxxxxx:yyyyyyyy	A bus error occurred in the PMC. aa, xxxxxxxx, and yyyyyyyy indicate internal error code. If this error occurs, the hardware may be faulty. Solution) Report the conditions under which the error occurred (system configuration, operation, time and frequency of error occurrences, tc.), the indicated internal error code, and the LED status on each board to FANUC.

	Message	Contents and solution
5	PC070 SUB65 CALL (STACK)	A stack error occurred during execution of ladder function instruction CALL/CALLU. Solution) Check the correspondence between the CALL/CALLU instruction and SPE instruction. If the error cannot be located, report the conditions under which the error occurred and the ladder program to FANUC.
6	PC080 SYS EMG xxxxxxxx:yyyyyyyy PC081 FL EMG xxxxxxxx:yyyyyyyy	A system alarm was caused by another software. Solution) Report the conditions under which the error occurred (system configuration, operation, time and frequency of error occurrences, etc.), the indicated internal error code, and the LED status on each board to FANUC.
7	PC097 PARITY ERR (LADDER) PC098 PARITY ERR (DRAM)	A parity error occurred in the PMC system. If this error occurred, the motherboard may be faulty. Solution) Replace the motherboard, then check whether the error recurs. If the error still occurs even after the replacement of the motherboard, report the conditions under which the error occurred (system configuration, operation, time and frequency of error occurrences, etc.) to FANUC.

(4) System alarm messages (for the C language board)

	Message	Contents and solution
1	PC1nn CPU INTERRT xxxxyyyyyy STATUS LED ☆★	CPU error (abnormal interrupt) nn : Exception code Exception code of the i80486. For details, refer to the relevant manual that describes the CPU. 00 Division error. For example, the divisor in a division instruction is 0. 12 Stack exception caused by, for example, stack segment limit violation 13 General protection exception generated when, for example, a segment limit is exceeded xxxx : Segment selector where the system error occurred A value 0103 to 02FB indicates the C execution area. yyyyyy : Offset address at which the system error occurred (Solution) If a C program is not used, or if the cause of the error cannot be determined even by checking the C program, contact FANUC.
2	PC130 RAM PRTY aa xxxxyyyyyy STATUS LED □★	A parity error occurred in user RAM or DRAM on the C language board. aa : RAM parity error occurrence information xxxx : Segment selector where the system error occurred yyyyyy : Offset address at which the system error occurred
5	PC160 F–BUS ERROR xxxxyyyyyy PC161 F–BUS ERROR xxxxyyyyyy PC162 F–BUS ERROR xxxxyyyyyy STATUS LED ★□	A bus error occurred on the C language board. xxxx : Segment selector where the system error occurred yyyyyy : Offset address at which the system error occurred
6	PC170 F–BUS ERROR xxxxyyyyyy PC171 F–BUS ERROR xxxxyyyyyy PC172 F–BUS ERROR xxxxyyyyyy STATUS LED ★□	A bus error occurred on the C language board. xxxx : Segment selector where the system error occurred yyyyyy : Offset address at which the system error occurred
7	PC199 ROM PARITY eeeeeeee STATUS LED ★☆	A parity error occurred in system ROM on the C language board. eeeeeeee : ROM parity error information

STATUS LED (green)
□ : Off ■ : On ☆★ : Blink

(5) Alarm messages (For EDIT: PMC–SB7)

Messages displayed during update of the PMC ladder diagram editing

Alarm number	Faulty location/corrective action	Contents
OVERLAPPED COM	If COME is missing, add it in proper position. If the COM is unnecessary, remove it.	There is no COME that corresponds to this COM.
END IN COM END1 IN COM END2 IN COM	If COME is missing, add it in proper position. If COM is unnecessary, remove it.	END,END1,END2, or END3 is found between COM and COME.
JMPE IN COM	JMPE and corresponding JMP must have same COM/COME status. Review JMP range and COM range, to adjust not to overlap with each other: it is possible that one range includes the other completely.	JMPE is found between COM and COME, and JMP and corresponding JMPE have different COM/COME status.
SP/SPE IN COM	If COME is missing, add it in proper position. If the COM is unnecessary, remove it.	SP or SPE is found between COM and COME.
COME WITHOUT COM	If COM is missing, add it in proper position. If the COME is unnecessary, remove it.	There is no COM that corresponds to this COME.
DUPLICATE CTR NUMBER (WARNING)	If some of them are unnecessary, remove them. If all of them are necessary, assign other number to parameter of them to make them unique. (If two or more instructions with same parameter number will never be active simultaneously at one time, the Ladder program has a possibility to work correctly, however, it is recommended from safety and maintenance points of view, that all these instructions should have different parameter number with each other.)	Plural CTRs have the same number as their parameter. (This is warning.)
ILLEGAL CTR NUMBER	If unnecessary, remove it. Assign correct number not to exceed the maximum number defined by each PMC model.	CTR has parameter number that is out of range.
DUPLICATE DIFU/DIFD NUMBER (WARNING)	If some of them are unnecessary, remove them. If all of them are necessary, assign other number to parameter of them to make them unique. (If two or more instructions with same parameter number will never be active simultaneously at one time, the Ladder program has a possibility to work correctly, however, it is recommended from safety and maintenance points of view, that all these instructions should have different parameter number with each other.)	Plural DIFUs or DIFDs have the same number as their parameter. (This is warning.)
ILLEGAL DIFU/DIFD NUMBER	If unnecessary, remove it. Assign correct number not to exceed the maximum number defined by each PMC model.	DIFU or DIFD has parameter number that is out of range.
NO END NO END1 NO END2 NO END3	Add END, END1, END2 or END3 in proper position.	END, END1, END2 or END3 is not found.

Alarm number	Faulty location/corrective action	Contents
DUPLICATE END1 DUPLICATE END2 DUPLICATE END3	Remove extra END1, END2 or END3.	Multiple END1, END2 or END3 are found.
GARBAGE AFTER END GARBAGE AFTER END2 GARBAGE AFTER END3	Remove unnecessary nets, and move necessary nets to proper position so that they will be executed.	There are some nets after END, END2 or END3, which will not be executed.
OVERLAPPED JMP	If JMPE is missing, add it in proper position. If the JMP is unnecessary, remove it.	There is no JMPE that corresponds to this JMP.
JMP/JMPE TO BAD COM LEVEL	JMP and corresponding JMPE must have same COM/COME status. Review JMP range and COM range, to adjust not to overlap with each other: it is possible that one range includes the other completely.	JMP and corresponding JMPE have different COM/COME status.
COME IN JMP	COME and corresponding COM must have same JMP/JMPE status. Review COM range and JMP range, to adjust not to overlap with each other: it is possible that one range includes the other completely.	COME is found between JMP and JMPE, and COM and corresponding COME have different JMP/JMPE status.
END IN JMP END1 IN JMP END2 IN JMP END3 IN JMP	If JMPE is missing, add it in proper position. If JMP is unnecessary, remove it.	END,END1,END2, or END3 is found between JMP and JMPE.
SP/SPE IN JMP	If JMPE is missing, add it in proper position. If the JMP is unnecessary, remove it.	SP or SPE is found between JMP and JMPE.
JMPB OVER COM BORDER	JMPB and its destination must have same COM/COME status. Review range of JMPB and COM range, to adjust not to overlap with each other: it is possible that one range includes the other completely.	JMPB and its destination differ in COM/COME status.
JMPB OVER LEVEL	JMPB can only jump to the same program level, or within a subprogram. If the JMPB is unnecessary, remove it. If LBL for the JMPB is missing, add it in proper position. If it should be JMPC, correct it.	JMPB jumps to different program level.
LBL FOR JMPB NOT FOUND	If JMPB is unnecessary, remove it. If LBL is missing, add it in proper position.	Can not find proper LBL for JMPB.
JMPC IN BAD LEVEL	JMPC is used to jump from a subprogram to level 2. If the JMPC is unnecessary, remove it. If it should be JMPB or JMP, correct it.	JMPC is used in other than subprogram.
LBL FOR JMPC NOT FOUND	If JMPC is unnecessary, remove it. If LBL is missing, add it in proper position: JMPC jumps into level 2. If it should be JMPB or JMP, correct it.	Can not find proper LBL for JMPC.

Alarm number	Faulty location/corrective action	Contents
LBL FOR JMPC IN BAD LEVEL	JMPC is used to jump from a subprogram to level 2. If the JMPC is unnecessary, remove it. If another LBL of same L–address that the JMPC is intended to jump exists in the subprogram, assign different L–address to these two LBLs. If it should be JMPB or JMP, correct it.	Destination of JMPC is not level 2.
JMPC INTO COM	LBL for JMPC must be located out of any COM and COME pair. If the JMPC is unnecessary, remove it. If the LBL is located wrong, move it to correct position. If the L–address of JMPC is wrong, correct it.	JMPC jumps to LBL between COM and COME.
JMPE WITHOUT JMP	If JMP is missing, add it in proper position. If the JMPE is unnecessary, remove it.	There is no JMP that corresponds to this JMPE.
TOO MANY LBL	Remove unnecessary LBLs. If this error still occurs, adjust the construction of program to use less LBLs.	There are too many LBLs.
DUPLICATE LBL	If some of these LBLs are unnecessary, remove them. If all of these LBLs is necessary, assign other L–addresses to them to make all LBLs unique.	Same L–address is used in plural LBLs.
OVERLAPPED SP	If SP is missing, add it in proper position. If the SPE is unnecessary, remove it.	There is no SP that corresponds to this SPE.
SPE WITHOUT SP	If SP is missing, add it in proper position. If the SPE is unnecessary, remove it.	There is no SP that corresponds to this SPE.
END IN SP	If SPE is missing, add it in proper position. If END is in wrong place, move it to proper position.	END is found between SP and SPE.
DUPLICATE P ADDRESS	If some of these SPs are unnecessary, remove them. If all of these SPs is necessary, assign other P–addresses to them to make all SPs unique.	Same P–address is used in plural SPs.
DUPLICATE TMRB NUMBER (WARNING)	If some of them are unnecessary, remove them. If all of them are necessary, assign other number to parameter of them to make them unique. (If two or more instructions with same parameter number will never be active simultaneously at one time, the Ladder program has a possibility to work correctly, however, it is recommended from safety and maintenance points of view, that all these instructions should have different parameter number with each other.)	Plural TMRBs have the same number as their parameter. (This is warning.)
ILLEGAL TMRB NUMBER	If unnecessary, remove it. Assign correct number not to exceed the maximum number defined by each PMC model.	TMRB has parameter number that is out of range.

Alarm number	Faulty location/corrective action	Contents
DUPLICATE TMR NUMBER (WARNING)	If some of them are unnecessary, remove them. If all of them are necessary, assign other number to parameter of them to make them unique. (If two or more instructions with same parameter number will never be active simultaneously at one time, the Ladder program has a possibility to work correctly, however, it is recommended from safety and maintenance points of view, that all these instructions should have different parameter number with each other.)	Plural TMRs have the same number as their parameter. (This is warning.)
ILLEGAL TMR NUMBER	If unnecessary, remove it. Assign correct number not to exceed the maximum number defined by each PMC model.	TMR has parameter number that is out of range.
NO SUCH SUBPROGRAM	If it calls wrong subprogram, correct it. If the subprogram is missing, create it.	Subprogram that is called by CALL/CALLU is not found.
UNAVAILABLE INSTRUCTION	Confirm that this ladder program is correct one. If this program is correct one, all these unsupported instructions have to be removed.	Unsupported instruction for this PMC model is found.
SP IN BAD LEVEL	SP can be used at top of a subprogram. Correct it so that no SP exists in other place.	SP is found in wrong place.
LADDER PROGRAM IS BROKEN	This ladder program must be all cleared once, and remake ladder program.	Ladder program may be broken by some reason.
NO WRITE COIL	Add proper write coil.	Write coil is necessary, but is not found.
CALL/CALLU IN BAD LEVEL	CALL/CALLU must be used in Level 2 or in subprograms. Do not use any other places.	CALL/CALLU is used in wrong place.
SP IN LEVEL3	If END3 is located wrong, move it to correct position. If the SP is unnecessary, remove it.	SP is found in level 3.

Messages that may be displayed during net editing on PMC program editor screen

Alarm number	Faulty location/corrective action	Contents
TOO MANY FUNCTIONAL INSTRUCTIONS IN ONE NET	Only one functional instruction is allowed to constitute a net. If necessary, divide the net into plural nets.	Too many functional instructions are in one net.
TOO LARGE NET	Divide the net into plural nets so that step number in a net may become small.	Net is too large. When a net is converted into the object, the net exceeds 256 steps.
NO INPUT FOR OPERATION	Coil without input, or coil connected to output of functional instruction that has no output, causes this error. If coil is not necessary, remove it. If necessary, connect it to meaningful input.	No signal is provided for logical operation.
OPERATION AFTER FUNCTION IS FORBIDDEN	Output of functional instruction can not be connected to a contact, nor to conjunction with other signal that will be implemented by logical–or operation.	No logical operation with functional instruction output is permitted, except write coils.
WRITE COIL IS EXPECTED	Add proper write coil to the net.	Write coil is expected, but not found.
BAD COIL LOCATION	Coil can be located only at rightmost column. Any coil located at other place must be erased once, and place necessary coils in correct place.	Coil is located in bad position.
SHORT CIRCUIT	Find contact with terminals connected by short circuit, and correct connections.	Some contacts are connected with short circuit.
FUNCTION AFTER DIVERGENCE IS FORBIDDEN	Functional instruction can not be used in output section of net. If necessary, divide the net into plural nets.	Functional instruction is used in output section of net.
ALL COIL MUST HAVE SAME INPUT	Left terminals of all coils in a net must be connected to same input point.	When a net contains more than one coil, the coils should not have any contact beside them affects only of the coils.
BAD CONDITION INPUT	Check the connection of all condition inputs of the functional instruction. Especially for functional instruction that has more than one condition input, check if connections to condition inputs interfere with each other.	Some condition input of functional instruction is not connected correctly.
NO CONNECTION	Find gap that is expected to be connected, and correct the connection.	There is signal connected to nowhere.
NET IS TOO COMPLICATED	Examine every connection, and find unnecessarily bending connection, or coils that are connected to different point.	Net is too complicated to analyze.
PARAMETER IS NOT SUPPLIED	Enter all of the relay addresses, and parameters of functional instructions.	Relay with blank address, or blank parameter of functional instruction, is found.

(6) Alarm messages (For EDIT)

Message	Contents and solution
ADDRESS BIT NOTHING	The address of the relay/coil is not set.
FUNCTION NOT FOUND	There is no functional instruction of the input number.
COM FUNCTION MISSING	The funcitonal instruction COM (SUB29) is not correctly dealt with. Correspondence of COM and COME (SUB29) is incorrect. Or, the number of coil controlled by COM is specified by the model which the number cannot be specified.
EDIT BUFFER OVER	There in no empty area of the buffer for the editing. (solution) Please reduce NET under editing.
END FUNCTION MISSING	Functional instruction END1,END2,END3 and END do not exist. Or, there are error net in END1,END2,END3,END. Or, order of END1,END2,END3, and END is not correct.
ERROR NET FOUND	There is an error net.
ILLEGAL FUNCTION NO.	The wrong number of the functional instruction is searched.
FUNCTION LINE ILLEGAL	The functional instruction is not correctly connected.
HORIZONTAL LINE ILLEGAL	The horizontal line of the net is not connected.
ILLEGAL NET CLEARED	Because the power had been turn off while editing LADDER, some net under editing was cleared.
ILLEGAL OPERATION	Operation is not correct. The value is not specified and only INPUT key was pushed. The address data is not correctly inputted. Because the space to display the instruction on screen is not enough, the functional instruction cannot be made.
SYMBOL UNDEFINED	The symbol which was inputted is not defined.
INPUT INVALID	There is an incorrect input data. Non–numerical value was inputted with COPY, INSLIN,C–UP,C–DOWN etc. The input address was specified for write coil. An illegal character was specified for the data table.
NET TOO LARGE	The input net is larger than the editing buffer. (solution) Please reduce the net under editing.
JUMP FUNCTION MISSING	The functional instruction JMP(SUB10) is not correctly dealt with. Correspondence of JMP and JMPE(SUB30) is incorrect. The number of coil to jump is specified by the model which the number of coil cannot specified. (It is possible to specify the coil number only on PMC–RB/RC.)
LADDER BROKEN	LADDER is broken.
LADDER ILLEGAL	There is an incorrect LADDER.
IMPOSSIBLE WRITE	You try to edit sequence program on the ROM.
OBJECT BUFFER OVER	The sequence program area was filled. (solution) Please reduce the LADDER.
PARAMETER NOTHING	There is no parameter of the functional instruction.
PLEASE COMPLETE NET	The error net was found in LADDER. (solution) After correcting the error net, please continue operating.

Message	Contents and solution
PLEASE KEY IN SUB NO.	Please input the number of the functional instruction. (solution) If you do not input the functional instruction, please push soft key “FUNC” again.
PROGRAM MODULE NOTHING	You tried to edit though there was neither RAM for debugging nor ROM for sequence program.
RELAY COIL FORBIT	There is an unnecessary relay or coil.
RELAY OR COIL NOTHING	The relay or the coil does not suffice.
PLEASE CLEAR ALL	It is impossible to recover the sequence program. (solution) Please clear the all data.
SYMBOL DATA DUPLICATE	The same symbol name is defined in other place.
COMMENT DATA OVERFLOW	The comment data area was filled. (solution) Please reduce the number of the commnet.
SYMBOL DATA OVERFLOW	The symbol data area was filled. (solution) Please reduce the number of the symbol.
VERTICAL LINE ILLEGAL	There is an incorrect vertical line of the net.
MESSAGE DATA OVERFLOW	The message data area was filled. (solution) Please reduce the number of the message.
1ST LEVEL EXECUTE TIME OVER	The 1st level of LADDER is too large to complete execution in time. (solution) Please reduce the 1st level of LADDER.
PARA NO. RANGE ERR:	The parameter number for a function instruction is not in the range. (solution) Correct the number so that it is within the range.
PARA NO. DUPLICATE:	The parameter number for a function instruction is used more than once. (solution) If the duplicate numbers pose the problem of simultaneous operation, change the parameter number to an unused number.

(7) Error Messages (at Automatic Write to Flash ROM after Ladder Editing)

Error message	Contents and solution
PROGRAM ALREADY EXISTS	A program already exists on flash ROM. (At BLANK)
PROGRAM ALREADY EXISTS (EXEC?)	A program already exists on flash ROM. (Remedy) When the message is displayed, pressing the EXEC key again causes write or erasure operation. (At write or erasure)
PROGRAM NOTHING	There is no program on flash ROM.
ERASE ERROR F–ROM WRITE ERROR 13 F–ROM WRITE ERROR 28	Flash ROM is abnormal. Replacement is required. Ask FANUC Service Representative for replacement.
WRITE ERROR F–ROM WRITE ERROR 12 F–ROM WRITE ERROR 29	
READ ERROR	
ANOTHER USED F–ROM WRITE ERROR 9 F–ROM WRITE ERROR 36	Flash ROM is used by other than PMC.
MUST BE IN EMG STOP NOT EMG STOP F–ROM WRITE ERROR 10 F–ROM WRITE ERROR 37	The CNC is not in the emergency stop state.
NO OPTION	There is no ROM cassette option.
SIZE ERROR IMPOSSIBLE WRITE (SIZE OVER) NO SPACE F–ROM WRITE ERROR 1 F–ROM WRITE ERROR 15 F–ROM WRITE ERROR 35	The sequence program is larger than the flash ROM size. (At write) (Remedy) Try the condense function. (EDIT/CLEAR screen) If the same phenomenon is still observed, the flash ROM size must be enlarged. The sequence program to be read is larger than the RAM size. (At read) (Remedy) RAM must be enlarged.

(8) Error Messages (at Assignment Data Editing)

Message	Contents and solution
ERR: GROUP NO. (0—15)	The group number must be 0 to 15.
ERR: BASE NO. (0—1)	The base number must be 0 or 1.
WARN: BASE NO. MUST BE 0	For I/O Unit–B, the base number must be 0. The base number was set to 0 forcibly.
ERR: SLOT NO. (1—10)	For I/O Unit–A, the slot number must be 1 to 10.
ERR: SLOT NO. (0, 1—30)	For I/O Unit–B, the slot number must be 0 or a number 1 to 30.
ERR: SLOT NO. MUST BE 0	When power on/off information for I/O Unit–B is set, the slot number must be 0.
ERR: ILLEGAL NAME	The input assignment name is illegal or not supported. Enter a correct name.
INPUT INVALID	The input character string is illegal. Enter a character string in a correct input format again.
IMPOSSIBLE WRITE	An attempt was made to edit ROM data. ROM data cannot be edited.
ERR: ADDRESS ALREADY ASSIGNED	The specified address is already assigned. Assign another address. Alternatively, delete the existing data, then set the address again.
ERR: ADDRESS OVER	A set address exceeds the maximum value (X127, Y127). Check the addresses dedicated to the unit to be set.
ERR: SLOT ALREADY DEFINED	The specified slot is already assigned. Check the existing data.
WARN: SLOT ALREADY DEFINED	The specified slot is already assigned. Check the existing data.
ERR: UNIT TYPE MISMATCH (IN OR OUT)	An output module cannot be allocated to an X address, or an input module cannot be allocated to a Y address.
WARN: UNIT TYPE MISMATCH (MODEL)	I/O Unit–A and I/O Unit–B are assigned to the same group. These units cannot exist together within the same group.

(9) Alarm messages (For I/O)

	Error message	Contents and solution
FLASH ROM	PROGRAM ALREADY EXISTS	A program already exists on flash ROM. (At BLANK)
	PROGRAM ALREADY EXISTS (EXEC ?)	A program already exists on flash ROM. Remedy) When the message is displayed, pressing the EXEC key again causes write or erasure operation. (At write or erasure)
	PROGRAM NOTHING	There is no program on flash ROM.
	ERASE ERROR	Flash ROM is abnormal. Replacement is required. Ask FANUC Service Representative for replacement.
	WRITE ERROR	
	READ ERROR	
	ANOTHER USED	Flash ROM is used by other than PMC.
	MUST BE IN EMG STOP NOT EMG STOP	The CNC is not in the emergency stop state.
	NO OPTION	There is no ROM cassette option.
	SIZE ERROR	The sequence program is larger than the flash ROM size. (At write) Remedy) Try the condense function. (EDIT/CLEAR screen) If the same phenomenon is still observed, the flash ROM size must be enlarged. The sequence program to be read is larger than the RAM size. (At read) Remedy) RAM must be enlarged.
HOST.FDCAS.OTHERS	I/O OPEN ERROR nn	nn = –1: RS–232C is used by other than PMC. Remedy) Check whether RS–232C is used by other than PMC. On the online setting screen (see Section 8.5.1 in III), check that “NOT USE” is indicated for RS–232C. nn = 6: The RS–232C option is not found. nn = 20: RS–232C connection is incorrect. Remedy) Check whether channel setting, connection, baud rate, and other settings are correct.
	I/O WRITE ERROR nn	nn = 20: RS–232C connection is incorrect. Remedy) Check whether channel setting, connection, baud rate, and other settings are correct. nn = 22: Communication cannot be performed correctly. Remedy) Check whether the cable is broken.
	I/O READ ERROR nn	nn = 20: RS–232C connection is incorrect. Remedy) Check whether channel setting, connection, baud rate, and other settings are correct. nn = 22: Communication cannot be performed correctly. Remedy) Check whether the cable is broken.
	ADDRESS IS OUT OF RANGE (xxxxxx)	Data for other than the PMC debugging RAM area was transferred. xxxxxx: Indicates the transfer address.
	DATA ERROR	Illegal data was read. Remedy) Check the cable and setting (speed). When a program in C was being read into the 16*i*/18*i*/21*i*: Remedy) Press soft keys [EDIT], [CLEAR], [CLRLNG], then [EXEC] to clear the C area.
	PROGRAM DATA ERROR	An attempt was made to output data, but the data was illegal. Remedy) Check the alarm on the alarm screen.

	Error message	Contents and solution
MEMORCARD	CREATE ERROR	The specified file name is illegal. Remedy) Specify a file name in the MS–DOS form. (See 7.2 (5))
	NO MORE SPACE or WRITE ERROR	There is not enough free space on the memory card. Remedy) Delete files to create free space.
	NOT READY	No memory card is installed. Remedy) Check whether a memory card is installed.
	MOUNT ERROR	Unformatted. Remedy) Perform formatting. (See 7.3.4 (a))
	WRITE PROTECT	The memory card is protected. Remedy) Set the protect switch of the memory card to OFF.
	BATTERY ALARM	The battery for the memory card is too weak. Remedy) Replace the memory card battery.
	FILE NOT FOUND	The specified file number or file name is not found. Remedy) With LIST, check the file name or file number.
	DELETE ERROR	The file cannot be deleted. Remedy) Change the file attribute.
	PROGRAM ALREADY EXISTS	There are duplicate file names. Remedy) Use another file name.
	I/O WRITE ERROR nn I/O READ ERROR nn I/O COMPARE ERROR nn I/O DELETE ERROR nn I/O LIST ERROR nn I/O FORMAT ERROR nn	nn = 30: No memory card is installed. Remedy) Check whether a memory card is installed. nn = 31: The memory card cannot be written to. Remedy) Set the protect switch of the memory card to OFF. Replace the memory card with an S–RAM card. nn = 32: The battery for the memory card is too weak. Remedy) Replace the memory card battery. nn = 102: There is not enough free space on the memory card. Remedy) Delete files to create free space. nn = 135: The memory card is unformatted. nn = 105: The memory card is unformatted. Remedy) Format the memory card. nn = 114: The specified file is not found. Remedy) With LIST, check the file name or file number. nn = 115: The specified file is protected. Remedy) Check the file attribute.
COMMON	COMPARE ERR XXXXXX=AA : BB CONT? (Y/N)	Data differs between the device and PMC. XXXXXX: Address aa: Data on the PMC bb: Data on the device Remedy) To continue operation, enter Y; otherwise, enter N. Then, press the INPUT key.
	DATA ERROR	Illegal data has been read. Remedy) Check the cable and setting (speed). When a program in C was being read into the 16*i*/18*i*/21*i*: Remedy) Press soft keys [EDIT], [CLEAR], [CLRLNG], then [EXEC] to clear the C area.
	PROGRAM DATA ERROR	An attempt was made to output data, but the data was illegal. Remedy) Check the alarm on the alarm screen.

A.3 ALARM LIST (SERIAL SPINDLE)

When a serial spindle alarm occurs, the following number is displayed on the CNC. n is a number corresponding to the spindle on which an alarm occurs. (n = 1: First spindle; n = 2: Second spindle; etc.)

NOTE*1
Note that the meanings of the SPM indications differ depending on which LED, the red or yellow LED, is on. When the red LED is on, the SPM indicates a 2–digit alarm number. When the yellow LED is on, the SPM indicates an error number that designates a sequence problem (for example, when a rotation command is entered with the emergency stop state not released).
→ See Appendix A.4, “Error Codes (Serial Spindle).”

Alarm Numbers and Alarms Displayed on the α Series Spindle Amplifier

No.	Message	SPM indication(*1)	Faulty location and remedy	Description
(750)	SPINDLE SERIAL LINK ERROR	A0 A	1 Replace the ROM on the SPM control printed circuit board. 2 Replace the SPM control printed circuit board.	The program does not start normally. ROM series error or hardware abnormality on the SPM control printed circuit board
(749)	S–SPINDLE LSI ERROR	A1	Replace the SPM control printed circuit board.	An abnormality was detected in the CPU peripheral circuit of the SPM control circuit.
7n01	SPN_n_ : MOTOR OVERHEAT	01	1 Check and correct the peripheral temperature and load status. 2 If the cooling fan stops, replace it.	The thermostat embedded in the motor winding operated. The internal temperature of the motor exceeds the specified level. The motor is used in excess of the continuous rating, or the cooling component is abnormal.
7n02	SPN_n_ : EX SPEED ERROR	02	1 Check and correct the cutting conditions to decrease the load. 2 Correct parameter No. 4082.	The motor speed cannot follow a specified speed. An excessive motor load torque is detected. The acceleration/deceleration time in parameter No. 4082 is insufficient.
7n03	SPN_n_ : FUSE ON DC LINK BLOWN	03	1 Replace the SPM unit. 2 Check the motor insulation status. 3 Replace the interface cable.	The PSM becomes ready (00 is indicated), but the DC link voltage is too low in the SPM. The fuse in the DC link section in the SPM is blown. (The power device is damaged or the motor is ground–fault.) The JX1A/JX1B connection cable is abnormal.
7n04	SPN_n_ : INPUT FUSE/ POWER FAULT	04	Check the state of the input power supply to the PSM.	The PSM found a missing power supply phase. (PSM alarm 5)

No.	Message	SPM indication(*1)	Faulty location and remedy	Description
7n06	SPN_n_ : THERMAL SENSOR DISCONNECT	06	1 Check and correct the parameter. 2 Replace the feedback cable.	The temperature sensor of the motor is disconnected.
7n07	SPN_n_ : OVERSPEED	07	Check for a sequence error. (For example, check whether spindle synchronization was specified when the spindle could not be turned.)	The motor speed has exceeded 115% of its rated speed. When the spindle axis was in position control mode, positional deviations were accumulated excessively (SFR and SRV were turned off during spindle synchronization.)
7n09	SPN_n_ : OVERHEAT MAIN CIRCUIT	09	1 Improve the heat sink cooling status. 2 If the heat sink cooling fan stops, replace the SPM unit.	Abnormal temperature rise of the power transistor radiator
7n11	SPN_n_ : OVERVOLT POW CIRCUIT	11	1 Check the selected PSM. 2 Check the input power voltage and change in power during motor deceleration. If the voltage exceeds 253 VAC (for the 200–V system) or 530 VAC (for the 400–V system), improve the power supply impedance.	Overvoltage of the DC link section of the PSM was detected. (PSM alarm indication: 7) PSM selection error. (The maximum output specification of the PSM is exceeded.)
7n12	SPN_n_ : OVERCURRENT POW CIRCUIT	12	1 Check the motor insulation status. 2 Check the spindle parameters. 3 Replace the SPM unit.	The motor output current is abnormally high. A motor–specific parameter does not match the motor model. Poor motor insulation
7n15	SPN_n_ : SP SWITCH CONTROL ALARM	15	1 Check and correct the ladder sequence. 2 Replace the switching MC.	The switch sequence in spindle switch/output switch operation is abnormal. The switching MC contact status check signal and command do not match.
7n16	SPN_n_ : RAM FAULT	16	Replace the SPM control printed circuit board.	Abnormality in an SPM control circuit component is detected. (RAM for external data is abnormal.)
7n18	SPN_n_ : SUMCHECK ERROR PGM DATA	18	Replace the SPM control printed circuit board.	Abnormality in an SPM control circuit component is detected. (Program ROM data is abnormal.)
7n19	SPN_n_ : EX OFFSET CURRENT U	19	Replace the SPM unit.	Abnormality in an SPM component is detected. (The initial value for the U phase current detection circuit is abnormal.)
7n20	SPN_n_ : EX OFFSET CURRENT V	20	Replace the SPM unit.	Abnormality in an SPM component is detected. (The initial value of the V phase current detection circuit is abnormal.)
7n21	SPN_n_ : POS SENSOR POLARITY ERROR	21	Check and correct the parameters. (No. 4000#0, 4001#4)	The polarity parameter setting of the position sensor is wrong.

No.	Message	SPM indication(*1)	Faulty location and remedy	Description
7n24	SPN_n_ : SERIAL TRANSFER ERROR	24	1 Place the CNC–to–spindle cable away from the power cable. 2 Replace the cable.	The CNC power is turned off (normal power–off or broken cable). An error is detected in communication data transferred to the CNC.
7n26	SPN_n_ : DISCONNECT C–VELO DETECT	26	1 Replace the cable. 2 Re–adjust the pre–amplifier.	The signal amplitude of the detection signal (connector JY2) on the Cs contour control motor side is abnormal. (Unconnected cable, adjustment error, etc.)
7n27	SPN_n_ : DISCONNECT POS–CODER	27	1 Replace the cable. 2 Re–adjust the BZ sensor signal.	1 The spindle position coder (connector JY4) signal is abnormal. 2 The signal amplitude (connector JY2) of the MZ or BZ sensor is abnormal. (Unconnected cable, adjustment error, etc.)
7n28	SPN_n_ : DISCONNECT C–POS DETECT	28	1 Replace the cable 2 Re–adjust the pre–amplifier.	The position detection signal (connector JY5) for Cs contour control is abnormal. (Unconnected cable, adjustment error, etc.)
7n29	SPN_n_ : SHORTTIME OVERLOAD	29	Check and correct the load status.	Excessive load has been applied continuously for a certain period of time. (This alarm is issued also when the motor shaft has been locked in the excitation state.)
7n30	SPN_n_ : OVERCURRENT POW CIRCUIT	30	Check and correct the power supply voltage.	Overcurrent is detected in PSM main circuit input. (PSM alarm indication: 1) Unbalanced power supply. PSM selection error (The maximum PSM output specification is exceeded.)
7n31	SPN_n_ : MOTOR LOCK OR V–SIG LOS	31	1 Check and correct the load status. 2 Replace the motor sensor cable (JY2 or JY5).	The motor cannot rotate at a specified speed. (A level not exceeding the SST level for the rotation command has existed continuously.) Abnormality in the speed detection signal.
7n32	SPN_n_ : RAM FAULT SERIAL LSI	32	Replace the SPM control printed circuit board.	Abnormality in an SPM control circuit component is detected. (The LSI device for serial transfer is abnormal.)
7n33	SPN_n_ : SHORTAGE POWER CHARGE	33	1 Check and correct the power supply voltage. 2 Replace the PSM unit.	Charging of direct current power supply voltage in the power circuit section is insufficient when the magnetic contractor in the amplifier is turned on (such as open phase and defective charging resistor).

No.	Message	SPM indication(*1)	Faulty location and remedy	Description
7n34	SPN_n_ : PARAMETER SETTING ERROR	34	Correct a parameter value according to the manual. If the parameter number is unknown, connect the spindle check board, and check the indicated parameter.	Parameter data exceeding the allowable limit is set.
7n35	SPN_n_ : EX SETTING GEAR RATIO	35	Correct the value according to the parameter manual.	Gear ratio data exceeding the allowable limit is set.
7n36	SPN_n_ : OVERFLOW ERROR COUNTER	36	Check whether the position gain value is too large, and correct the value.	An error counter overflow occurred.
7n37	SPN_n_ : SPEED DETECT PAR. ERROR	37	Correct the value according to the parameter manual.	The setting of the parameter for the number of pulses in the speed detector is incorrect.
7n39	SPN_n_ : 1–ROT Cs SIGNAL ERROR	39	1 Adjust the 1–rotation signal in the pre–amplifier. 2 Check the cable shield status. 3 Replace the cable.	An incorrect relationship between the 1–rotation signal and the number of AB phase pulses was detected during Cs contour control.
7n40	SPN_n_ : NO 1–ROT Cs SIGNAL DETECT	40	1 Adjust the 1–rotation signal in the pre–amplifier. 2 Check the cable shield status. 3 Replace the cable.	The 1–rotation signal is not generated during Cs contour control.
7n41	SPN_n_ : 1–ROT POS–CODER ERROR	41	1 Check and correct the parameter. 2 Replace the cable. 3 Re–adjust the BZ sensor signal.	1 The 1–rotation signal of the spindle position coder (connector JY4) is abnormal. 2 The 1–rotation signal (connector JY2) of the MZ or BZ sensor is abnormal. 3 Parameter setting error
7n42	SPN_n_ : NO 1–ROT. POS–CODER DETECT	42	1 Replace the cable. 2 Re–adjust the BZ sensor signal.	1 The 1–rotation signal of the spindle position coder (connector JY4) is disconnected. 2 The 1–rotation signal (connector JY2) of the MZ or BZ sensor is disconnected.
7n43	SPN_n_ : DISCON. PC FOR DIF. SP. MODE	43	Replace the cable.	The differential speed position coder signal (connector JY8) in SPM type 3 is abnormal.
7n44	SPN_n_ : CONTROL CIRCUIT(AD) ERROR	44	Replace the SPM control printed circuit board.	Abnormality in an SPM control circuit component was detected (A/D converter abnormality).
7n46	SPN_n_ : SCREW 1–ROT POS–COD. ALARM	46	1 Check and correct the parameter. 2 Replace the cable. 3 Re–adjust the BZ sensor signal.	An abnormality equivalent to alarm 41 was detected during thread cutting operation.

No.	Message	SPM indication(*1)	Faulty location and remedy	Description
7n47	SPN_n_ : POS–CODER SIGNAL ABNORMAL	47	1 Replace the cable. 2 Re–adjust the BZ sensor signal. 3 Correct the cable layout (vicinity of the power line).	1 The A/B phase signal of the spindle position coder (connector JY4) is abnormal. 2 The A/B phase signal (connector JY2) of the MZ or BZ sensor is abnormal. The relationship between the A/B phase and 1–rotation signal is incorrect (Pulse interval mismatch).
7n49	SPN_n_ : HIGH CONV. DIF. SPEED	49	Check whether the calculated differential speed value exceeds the maximum motor speed.	In differential speed mode, the speed of the other spindle converted to the speed of the local spindle has exceeded the allowable limit (the differential speed is calculated by multiplying the speed of the other spindle by the gear ratio).
7n50	SPN_n_ : SPNDL CONTROL OVERSPEED	50	Check whether the calculated value exceeds the maximum motor speed.	In spindle synchronization, the speed command calculation value exceeded the allowable limit (the motor speed is calculated by multiplying the specified spindle speed by the gear ratio).
7n51	SPN_n_ : LOW VOLT DC LINK	51	1 Check and correct the power supply voltage. 2 Replace the MC.	Input voltage drop was detected. (PSM alarm indication: 4) (Momentary power failure or poor MC contact)
7n52	SPN_n_ : ITP SIGNAL ABNORMAL I	52	1 Replace the SPM control printed circuit board. 2 Replace the spindle interface printed circuit board in the CNC.	NC interface abnormality was detected (the ITP signal stopped).
7n53	SPN_n_ : ITP SIGNAL ABNORMAL II	53	1 Replace the SPM control printed circuit board. 2 Replace the spindle interface printed circuit board in the CNC.	NC interface abnormality was detected (the ITP signal stopped).
7n54	SPN_n_ : OVERLOAD CURRENT	54	Review the load state.	An overload current was detected.
7n55	SPN_n_ : POWER LINE SWITCH ERROR	55	1 Replace the magnetic contactor. 2 Check and correct the sequence.	The power line state signal of the magnetic contactor for selecting a spindle or output is abnormal.
7n56	SPN_n_ : INNER COOLING FAN STOP	56	Replace the SPM unit.	The cooling fan in the SPM control circuit stopped.
7n57	SPN_n_ : EX DECELERATION POWER	57	1 Decrease the acceleration/deceleration duty. 2 Check the cooling condition (peripheral temperature). 3 If the cooling fan stops, replace the resistor. 4 If the resistance is abnormal, replace the resistor.	An overload was detected in the regenerative resistance. (PSMR alarm indication: 8) Thermostat operation or short–time overload was detected. The regenerative resistor was disconnected, or an abnormal resistance was detected.

No.	Message	SPM indication(*1)	Faulty location and remedy	Description
7n58	SPN_n_ : OVERLOAD IN PSM	58	1 Check the PSM cooling status. 2 Replace the PSM unit.	The temperature of the radiator of the PSM has increased abnormally. (PSM alarm indication: 3)
7n59	SPN_n_ : COOLING FAN STOP IN PSM	59	Replace the SPM unit.	The cooling fan in the PSM stopped. (PSM alarm indication: 2)
7n62	SPN_n_ : MOTOR VCMD OVERFLOWED	62	Check and correct the parameters. (No. 4021, 4056 to 4059)	The specified motor speed is too large.
7n66	SPN_n_ : AMP MODULE COMMUNICATION	66	1 Replace the cable. 2 Check and correct the connection.	An error was found in communication between amplifiers.
7n73	SPN_n_ : MOTOR SENSOR DISCONNECTED	73	1 Replace the feedback cable. 2 Check the shield processing. 3 Check and correct the connection. 4 Adjust the sensor.	The motor sensor feedback signal is not present.
7n74	SPN_n_ : CPU TEST ERROR	74	Replace the SPM control printed–circuit board.	An error was detected in a CPU test.
7n75	SPN_n_ : CRC ERROR	75	Replace the SPM control printed–circuit board.	An error was detected in a CRC test.
7n79	SPN_n_ : INITIAL TEST ERROR	79	Replace the SPM control printed–circuit board.	An error was detected in an initial test operation.
7n81	SPN_n_ : 1–ROT MOTOR SENSOR ERROR	81	1 Check and correct the parameter. 2 Replace the feedback cable. 3 Adjust the sensor.	The one–rotation signal of the motor sensor cannot be correctly detected.
7n82	SPN_n_ : NO 1–ROT MOTOR SENSOR	82	1 Replace the feedback cable. 2 Adjust the sensor.	The one–rotation signal of the motor sensor is not generated.
7n83	SPN_n_ : MOTOR SENSOR SIGNAL ERROR	83	1 Replace the feedback cable. 2 Adjust the sensor.	An irregularity was detected in a motor sensor feedback signal.
7n84	SPN_n_ : SPNDL SENSOR DISCONNECTED	84	1 Replace the feedback cable. 2 Check the shield processing. 3 Check and correct the connection. 4 Check and correct the parameter. 5 Adjust the sensor.	The spindle sensor feedback signal is not present.
7n85	SPN_n_ : 1–ROT SPNDL SENSOR ERROR	85	1 Check and correct the parameter. 2 Replace the feedback cable. 3 Adjust the sensor.	The one–rotation signal of the spindle sensor cannot be correctly detected.
7n86	SPN_n_ : NO 1–ROT SPNDL SENSOR ERROR	86	1 Replace the feedback cable. 2 Adjust the sensor.	The one–rotation signal of the spindle sensor is not generated.
7n87	SPN_n_ : SPNDL SENSOR SIGNAL ERROR	87	The one–rotation signal of the spindle sensor is not generated.	An irregularity was detected in a spindle sensor feedback signal.

No.	Message	SPM indication(*1)	Faulty location and remedy	Description
7n88	SPN_n_ : COOLING RADIFAN FAILURE	88	Replace the SPM external cooling fan.	The external cooling fan stopped.
7n97	SPN_n_ : OTHER SPINDLE ALARM	97	Replace the SPM.	Another irregularity was detected.
7n98	SPN_n_ : OTHER CONVERTER ALARM	98	Check the PSM alarm display.	A PSM alarm was detected.

No.	Message	SPM indication(*1)	Faulty location and remedy	Description
9001	SPN_n_ : MOTOR OVERHEAT	01	1 Check and correct the peripheral temperature and load status. 2 If the cooling fan stops, replace it.	The thermostat embedded in the motor winding operated. The internal temperature of the motor exceeds the specified level. The motor is used in excess of the continuous rating, or the cooling component is abnormal.
9002	SPN_n_ : EX SPEED ERROR	02	1 Check and correct the cutting conditions to decrease the load. 2 Correct parameter No. 4082.	The motor speed cannot follow a specified speed. An excessive motor load torque is detected. The acceleration/deceleration time in parameter No. 4082 is insufficient.
9003	SPN_n_ : FUSE ON DC LINK BLOWN	03	1 Replace the SPM unit. 2 Check the motor insulation status. 3 Replace the interface cable.	The PSM becomes ready (00 is indicated), but the DC link voltage is too low in the SPM. The fuse in the DC link section in the SPM is blown. (The power device is damaged or the motor is ground–fault.) The JX1A/JX1B connection cable is abnormal.
9006	SPN_n_ : THERMAL SENSOR DISCONNECT	06	1 Check and correct the parameter. 2 Replace the feedback cable.	The temperature sensor of the motor is disconnected.
9007	SPN_n_ : OVERSPEED	07	Check for a sequence error. (For example, check whether spindle synchronization was specified when the spindle could not be turned.)	The motor speed has exceeded 115% of its rated speed. When the spindle axis was in position control mode, positional deviations were accumulated excessively (SFR and SRV were turned off during spindle synchronization.)
9009	SPN_n_ : OVERHEAT MAIN CIRCUIT	09	1 Improve the heat sink cooling status. 2 If the heat sink cooling fan stops, replace the SPM unit.	Abnormal temperature rise of the power transistor radiator

No.	Message	SPM indication(*1)	Faulty location and remedy	Description
9011	SPN_n_ : OVERVOLT POW CIRCUIT	11	1 Check the selected PSM. 2 Check the input power voltage and change in power during motor deceleration. If the voltage exceeds 253 VAC (for the 200–V system) or 530 VAC (for the 400–V system), improve the power supply impedance.	Overvoltage of the DC link section of the PSM was detected. (PSM alarm indication: 7) PSM selection error. (The maximum output specification of the PSM is exceeded.)
9012	SPN_n_ : OVERCURRENT POW CIRCUIT	12	1 Check the motor insulation status. 2 Check the spindle parameters. 3 Replace the SPM unit.	The motor output current is abnormally high. A motor–specific parameter does not match the motor model. Poor motor insulation
9015	SPN_n_ : SP SWITCH CONTROL ALARM	15	1 Check and correct the ladder sequence. 2 Replace the switching MC.	The switch sequence in spindle switch/output switch operation is abnormal. The switching MC contact status check signal and command do not match.
9016	SPN_n_ : RAM FAULT	16	Replace the SPM control printed circuit board.	Abnormality in an SPM control circuit component is detected. (RAM for external data is abnormal.)
9018	SPN_n_ : SUMCHECK ERROR PGM DATA	18	Replace the SPM control printed circuit board.	Abnormality in an SPM control circuit component is detected. (Program ROM data is abnormal.)
9019	SPN_n_ : EX OFFSET CURRENT U	19	Replace the SPM unit.	Abnormality in an SPM component is detected. (The initial value for the U phase current detection circuit is abnormal.)
9020	SPN_n_ : EX OFFSET CURRENT V	20	Replace the SPM unit.	Abnormality in an SPM component is detected. (The initial value of the V phase current detection circuit is abnormal.)
9021	SPN_n_ : POS SENSOR POLARITY ERROR	21	Check and correct the parameters. (No. 4000#0, 4001#4)	The polarity parameter setting of the position sensor is wrong.
9024	SPN_n_ : SERIAL TRANSFER ERROR	24	1 Place the CNC–to–spindle cable away from the power cable. 2 Replace the cable.	The CNC power is turned off (normal power–off or broken cable). An error is detected in communication data transferred to the CNC.
9027	SPN_n_ : DISCONNECT POS–CODER	27	1 Replace the cable. 2 Re–adjust the BZ sensor signal.	1 The spindle position coder (connector JY4) signal is abnormal. 2 The signal amplitude (connector JY2) of the MZ or BZ sensor is abnormal. (Unconnected cable, adjustment error, etc.)

No.	Message	SPM indication(*1)	Faulty location and remedy	Description
9029	SPN_n_ : SHORTTIME OVERLOAD	29	Check and correct the load status.	Excessive load has been applied continuously for a certain period of time. (This alarm is issued also when the motor shaft has been locked in the excitation state.)
9030	SPN_n_ : OVERCURRENT POW CIRCUIT	30	Check and correct the power supply voltage.	Overcurrent is detected in PSM main circuit input. (PSM alarm indication: 1) Unbalanced power supply. PSM selection error (The maximum PSM output specification is exceeded.)
9031	SPN_n_ : MOTOR LOCK OR V–SIG LOS	31	1 Check and correct the load status. 2 Replace the motor sensor cable (JY2 or JY5).	The motor cannot rotate at a specified speed. (A level not exceeding the SST level for the rotation command has existed continuously.) Abnormality in the speed detection signal.
9032	SPN_n_ : RAM FAULT SERIAL LSI	32	Replace the SPM control printed circuit board.	Abnormality in an SPM control circuit component is detected. (The LSI device for serial transfer is abnormal.)
9033	SPN_n_ : SHORTAGE POWER CHARGE	33	1 Check and correct the power supply voltage. 2 Replace the PSM unit.	Charging of direct current power supply voltage in the power circuit section is insufficient when the magnetic contractor in the amplifier is turned on (such as open phase and defective charging resistor).
9034	SPN_n_ : PARAMETER SETTING ERROR	34	Correct a parameter value according to the manual. If the parameter number is unknown, connect the spindle check board, and check the indicated parameter.	Parameter data exceeding the allowable limit is set.
9035	SPN_n_ : EX SETTING GEAR RATIO	35	Correct the value according to the parameter manual.	Gear ratio data exceeding the allowable limit is set.
9036	SPN_n_ : OVERFLOW ERROR COUNTER	36	Check whether the position gain value is too large, and correct the value.	An error counter overflow occurred.
9037	SPN_n_ : SPEED DETECT PAR. ERROR	37	Correct the value according to the parameter manual.	The setting of the parameter for the number of pulses in the speed detector is incorrect.
9041	SPN_n_ : 1–ROT POS–CODER ERROR	41	1 Check and correct the parameter. 2 Replace the cable. 3 Re–adjust the BZ sensor signal.	1 The 1–rotation signal of the spindle position coder (connector JY4) is abnormal. 2 The 1–rotation signal (connector JY2) of the MZ or BZ sensor is abnormal. 3 Parameter setting error

No.	Message	SPM indication(*1)	Faulty location and remedy	Description
9042	SPN_n_ : NO 1–ROT. POS–CODER DETECT	42	1 Replace the cable. 2 Re–adjust the BZ sensor signal.	1 The 1–rotation signal of the spindle position coder (connector JY4) is disconnected. 2 The 1–rotation signal (connector JY2) of the MZ or BZ sensor is disconnected.
9043	SPN_n_ : DISCON. PC FOR DIF. SP. MODE	43	Replace the cable.	The differential speed position coder signal (connector JY8) in SPM type 3 is abnormal.
9046	SPN_n_ : SCREW 1–ROT POS–COD. ALARM	46	1 Check and correct the parameter. 2 Replace the cable. 3 Re–adjust the BZ sensor signal.	An abnormality equivalent to alarm 41 was detected during thread cutting operation.
9047	SPN_n_ : POS–CODER SIGNAL ABNORMAL	47	1 Replace the cable. 2 Re–adjust the BZ sensor signal. 3 Correct the cable layout (vicinity of the power line).	1 The A/B phase signal of the spindle position coder (connector JY4) is abnormal. 2 The A/B phase signal (connector JY2) of the MZ or BZ sensor is abnormal. The relationship between the A/B phase and 1–rotation signal is incorrect (Pulse interval mismatch).
9049	SPN_n_ : HIGH CONV. DIF. SPEED	49	Check whether the calculated differential speed value exceeds the maximum motor speed.	In differential speed mode, the speed of the other spindle converted to the speed of the local spindle has exceeded the allowable limit (the differential speed is calculated by multiplying the speed of the other spindle by the gear ratio).
9050	SPN_n_ : SPNDL CONTROL OVERSPEED	50	Check whether the calculated value exceeds the maximum motor speed.	In spindle synchronization, the speed command calculation value exceeded the allowable limit (the motor speed is calculated by multiplying the specified spindle speed by the gear ratio).
9051	SPN_n_ : LOW VOLT DC LINK	51	1 Check and correct the power supply voltage. 2 Replace the MC.	Input voltage drop was detected. (PSM alarm indication: 4) (Momentary power failure or poor MC contact)
9052	SPN_n_ : ITP SIGNAL ABNORMAL I	52	1 Replace the SPM control printed circuit board. 2 Replace the spindle interface printed circuit board in the CNC.	NC interface abnormality was detected (the ITP signal stopped).
9053	SPN_n_ : ITP SIGNAL ABNORMAL II	53	1 Replace the SPM control printed circuit board. 2 Replace the spindle interface printed circuit board in the CNC.	NC interface abnormality was detected (the ITP signal stopped).
9054	SPN_n_ : OVERLOAD CURRENT	54	Review the load state.	An overload current was detected.
9055	SPN_n_ : POWER LINE SWITCH ERROR	55	1 Replace the magnetic contactor. 2 Check and correct the sequence.	The power line state signal of the magnetic contactor for selecting a spindle or output is abnormal.

No.	Message	SPM indication(*1)	Faulty location and remedy	Description
9056	SPN_n_ : INNER COOLING FAN STOP	56	Replace the SPM unit.	The cooling fan in the SPM control circuit stopped.
9057	SPN_n_ : EX DECELERATION POWER	57	1 Decrease the acceleration/deceleration duty. 2 Check the cooling condition (peripheral temperature). 3 If the cooling fan stops, replace the resistor. 4 If the resistance is abnormal, replace the resistor.	An overload was detected in the regenerative resistance. (PSMR alarm indication: 8) Thermostat operation or short–time overload was detected. The regenerative resistor was disconnected, or an abnormal resistance was detected.
9058	SPN_n_ : OVERLOAD IN PSM	58	1 Check the PSM cooling status. 2 Replace the PSM unit.	The temperature of the radiator of the PSM has increased abnormally. (PSM alarm indication: 3)
9059	SPN_n_ : COOLING FAN STOP IN PSM	59	Replace the SPM unit.	The cooling fan in the PSM stopped. (PSM alarm indication: 2)
9066	SPN_n_ : AMP MODULE COMMUNICATION	66	1 Replace the cable. 2 Check and correct the connection.	An error was found in communication between amplifiers.
9073	SPN_n_ : MOTOR SENSOR DISCONNECTED	73	1 Replace the feedback cable. 2 Check the shield processing. 3 Check and correct the connection. 4 Adjust the sensor.	The motor sensor feedback signal is not present.
9074	SPN_n_ : CPU TEST ERROR	74	Replace the SPM control printed–circuit board.	An error was detected in a CPU test.
9075	SPN_n_ : CRC ERROR	75	Replace the SPM control printed–circuit board.	An error was detected in a CRC test.
9079	SPN_n_ : INITIAL TEST ERROR	79	Replace the SPM control printed–circuit board.	An error was detected in an initial test operation.
9081	SPN_n_ : 1–ROT MOTOR SENSOR ERROR	81	1 Check and correct the parameter. 2 Replace the feedback cable. 3 Adjust the sensor.	The one–rotation signal of the motor sensor cannot be correctly detected.
9082	SPN_n_ : NO 1–ROT MOTOR SENSOR	82	1 Replace the feedback cable. 2 Adjust the sensor.	The one–rotation signal of the motor sensor is not generated.
9083	SPN_n_ : MOTOR SENSOR SIGNAL ERROR	83	1 Replace the feedback cable. 2 Adjust the sensor.	An irregularity was detected in a motor sensor feedback signal.
9084	SPN_n_ : SPNDL SENSOR DISCONNECTED	84	1 Replace the feedback cable. 2 Check the shield processing. 3 Check and correct the connection. 4 Check and correct the parameter. 5 Adjust the sensor.	The spindle sensor feedback signal is not present.
9085	SPN_n_ : 1–ROT SPNDL SENSOR ERROR	85	1 Check and correct the parameter. 2 Replace the feedback cable. 3 Adjust the sensor.	The one–rotation signal of the spindle sensor cannot be correctly detected.

No.	Message	SPM indication(*1)	Faulty location and remedy	Description
9086	SPN_n_ : NO 1–ROT SPNDL SENSOR ERROR	86	1 Replace the feedback cable. 2 Adjust the sensor.	The one–rotation signal of the spindle sensor cannot be correctly detected.
9087	SPN_n_ : SPNDL SENSOR SIGNAL ERROR	87	The one–rotation signal of the spindle sensor is not generated.	An irregularity was detected in a spindle sensor feedback signal.
9088	SPN_n_ : COOLING RADIFAN FAILURE	88	Replace the SPM external cooling fan.	The external cooling fan stopped.
9097	SPN_n_ : OTHER SPINDLE ALARM		Check the SPM alarm display.	Other spindle alarm
9098	SPN_n_ : OTHER CONVERTER ALARM		Check the PSM alarm display.	Other converter alarm
9110	SPN_n_ : AMP COMMUNICATION ERROR	b0	1 Replace the communication cable between amplifier and module. 2 Replace the SPM or PSM control printed circuit board.	Communication error between amplifier and module
9111	SPN_n_ : CONV.LOW VOLT CONTROL	b1	Replace the PSM control printed circuit board.	Low converter control power supply voltage (PSM indication = 6)
9112	SPN_n_ : CONV.EXDISCHARGE POW.	b2	1 Check the regenerative resistance. 2 Check the motor selection. 3 Replace the PSM	Excessive converter regenerative power (PSM indication = 8)
9113	SPN_n_ : CONV.COOLING FAN FAILURE	b3	Replace the cooling fan.	Stopped cooling fan of the converter radiator (PSM indication = A)
9120	SPN_n_ : COMMUNICATION DATA ERROR	C0	1 Replace the communication cable between CNC and SPM. 2 Replace the SPM control printed circuit board. 3 Replace the CNC side spindle interface printed circuit board.	Communication data alarm
9121	SPN_n_ : COMMUNICATION DATA ERROR	C1	1 Replace the communication cable between CNC and SPM. 2 Replace the SPM control printed circuit board. 3 Replace the CNC side spindle interface printed circuit board.	Communication data alarm
9122	SPN_n_ : COMMUNICATION DATA ERROR	C2	1 Replace the communication cable between CNC and SPM. 2 Replace the SPM control printed circuit board. 3 Replace the CNC side spindle interface printed circuit board.	Communication data alarm

A.4 ERROR CODES (SERIAL SPINDLE)

NOTE*1

Note that the meanings of the SPM indications differ depending on which LED, the red or yellow LED, is on. When the yellow LED is on, an error code is indicated with a 2–digit number. The error code is not displayed on the CNC screen.

When the red LED is on, the SPM indicates the number of an alarm generated in the serial spindle.

→ See Appendix A.3, “Alarms (Serial Spindle).”

Errors Displayed on the α Series Spindle Amplifier

SPM indication(*1)	Faulty location and remedy	Description
00	Check the *ESP and MRDY sequence. (For MRDY, pay attention to the parameter setting regarding the use of the MRDY signal (bit 0 of parameter No. 4001).)	Although neither *ESP (emergency stop signal; there are two types of signals including the PMC signal and PSM contact signal(*2)) nor MRDY (machine ready signal) is input, SFR (forward rotation signal)/SRF (reverse rotation signal)/ORCM (orientation command) is input.
01	Check the spindle motor speed detector parameter (bits 2, 1, and 0 of parameter No. 4011).	When the spindle motor has a high–resolution magnetic pulse coder (Cs sensor) (bits 6 and 5 of parameter No. 4001 are set to 0 and 1, respectively), 128 /rev is to be set for the speed detector (bits 2, 1, and 0 of parameter No. 4011 are set to 0, 0, and 1, respectively). However, a value other than 128 /rev is set. In this case, the motor is not excited.
02	Check the parameters for the detector for Cs contour control (bit 5 of parameter No. 4001 and bit 4 of parameter No. 4018).	Although use of a high–resolution magnetic pulse coder (bit 5 of parameter No. 4001 = 1) or use of the Cs contour control function by the sensor (bit 4 of parameter No. 4018 = 1) is not set, a Cs control command is input. In this case, the motor is not excited.
03	Check the position coder signal parameter (bit 2 of parameter No. 4001).	Although use of the position coder signal (bit 2 of parameter No. 4001 = 1) is not set, a servo mode (rigid tapping, spindle positioning) or spindle synchronization command is input. In this case, the motor is not excited.
04	Check the orientation software option.	Although the orientation option is not set, an orientation command (ORCM) is input.
05	Check the spindle output switching software option and power line status signal (RCH).	Although the output switching option is not set, the low–speed winding is selected (RCH = 1).
06	Check the sequence (CON, SFR, SRV).	Although the Cs contour control mode is specified, SFR/SRV is not input.
07	Check the sequence (SFR, SRV).	Although the servo mode (rigid tapping, spindle positioning) is specified, SFR/SRV is not input.
09	Check the sequence (SPSYC, SFR, SRV)	Although spindle synchronization mode is specified, SFR/SRV is not input.
10	During execution of the C–axis control command, do not specify another operation mode. Before entering another mode, cancel the Cs contour control command.	Although Cs contour control mode is set, another operation mode (servo mode, spindle synchronization, or orientation) is specified.
11	During execution of the servo mode command, do not specify another operation mode. Before entering another mode, cancel the servo mode.	Although servo mode (rigid tapping, or spindle positioning) is set, another operation mode (Cs contour control, spindle synchronization, or orientation) is specified.

SPM indication(*1)	Faulty location and remedy	Description
12	During execution of the spindle synchronization command, do not specify another operation mode. Before entering another mode, cancel the spindle synchronization command.	Although spindle synchronization is being performed, another operation mode (Cs contour control, servo mode, or orientation) is specified.
13	During execution of the orientation command, do not specify another operation mode. Before entering another mode, cancel the orientation command.	Although the orientation command is being executed, another operation mode (Cs contour control, servo mode, or synchronization) is specified.
14	Input the SFT or SRV signal.	The SFT and SRV signals are both input at the same time.
15	Check bit 5 of parameter No. 4000 and PMC signal (CON).	When bit 5 of parameter No. 4000 is set to 1 to indicate the presence of the differential speed mode function, Cs contour control is specified.
16	Check bit 5 of parameter No. 4000 and PMC signal (DEFMD).	When bit 5 of parameter No. 4000 is set to 0 to indicate the absence of the differential speed mode function, the differential speed mode command (DEFMD) is input.
17	Check bits 2, 1, and 0 of parameter No. 4011.	Setting of the speed detector parameter (bits 2, 1, and 0 of parameter No. 4011) is invalid. (The corresponding speed detector is not present.)
18	Check bit 2 of parameter No. 4001 and PMC signal (ORCM).	Although bits 2 of parameter No. 4001 is set to 0 not to use the position coder signal, a command for orientation by a position coder (ORCMA) is input.
19	During execution of the orientation command, do not specify another operation mode. Before entering another mode, cancel the orientation command.	Although orientation by a magnetic sensor is being performed, another operation mode is specified.
20	Check bit 5 of parameter No. 4001, bit 5 of parameter No. 4014, and bit 4 of parameter No. 4018.	When the use of the slave operation mode function is set (bit 5 of parameter No. 4014 = 1), the use of a high–resolution magnetic pulse coder (bit 5 of parameter No. 4001 = 1) or the use of the Cs contour control function by the sensor (bit 4 of parameter No. 4018 = 1) is specified. These items cannot be set at the same time.
21	Input the slave operation mode command (SLV) in normal operation mode.	Although position control (such as servo mode or orientation) is being performed, a slave operation mode command (SLV) is input.
22	Input the position control command in normal operation mode	Although slave operation mode is set (SLVS = 1), a position control command (such as servo mode or orientation) is input.
23	Check bit 5 of parameter No. 4014 and PMC signal (SLV).	Although bit 5 of parameter No. 4014 is set to 0 not to use the slave operation mode function, a slave operation mode command (SLV) is input.
24	Check the PMC signal (INCMD). Perform orientation by specifying an absolute position first.	Orientation is performed in incremental operation mode (INCMD = 1) first, then the absolute position command (INCMD = 0) is input.
25	Check the spindle amplifier specifications and parameter setting (bit 4 of parameter No. 4018).	Although the spindle amplifier SPM type 4 is not used, the use of the Cs contour control function by the sensor is set (bit 4 of parameter No. 4018 = 1).

NOTE*2

PSM contact signal

Between ESP1 and ESP2 on the PSM

Contact open: Emergency stop
Contact closed: Normal operation

B LIST OF MAINTENANCE PARTS

Item		Ordering information	Remarks
Fuse	LCD–mounted type control unit (without PC) CNC display unit for *i*s series CNC	A02B–0236–K100	
	LCD–mounted type *i*s series control unit	A02B–0236–K101	
	Stand–alone type *i*s series control unit	A02B–0265–K100	
	Stand–alone type LCD unit	A02B–0265–K101	
	Separate detector interface unit	A60L–0001–0290#LM20	Rated at 2 A
	I/O module for operator's panel	A03B–0815–K001	
	Connector panel I/O module	A03B–0815–K002	
	Distributed I/O machine operator's panel	A60L–0001–0290#LM10	
	Interface unit of machine operator's panel	A02B–0120–K107	
	Connection unit of operator's panel	A02B–0163–K111	
	CNC display unit with PC functions and PANEL *i* (1) (*)	A02B–0236–K101	
	CNC display unit with PC functions and PANEL *i* (2) (*)	A08B–0082–K001	
Battery	For control unit memory backup For CNC display unit with PC functions and PANEL *i*	A02B–0200–K102	
Fan motor for LCD–mounted type	For control unit with no expansion slot CNC display unit for *i*s series CNC	A02B–0236–K120	
	For control unit with expansion slot	A02B–0281–K121	
	For control unit with three expansion slots	A02B–0236–K122	
Fan unit for stand–alone type CNC	For 1–slot case	A02B–0265–C101	
	For 2–slot case	A02B–0260–C021	
Fan for CNC display unit with PC functions and PANEL *i*	For main body	A08B–0082–K010	
	For HDD	A13B–0178–K001	
Backlight	For 7.2″ LCD	A02B–0236–K112	
	For 8.4″ LCD	A02B–0236–K119	
	For 9.5″ LCD	A02B–0281–K114	
Touch panel protection sheet	For 10.4" LCD with touch panel	A02B–0236–K110	
	For 10.4" LCD with touch panel and soft key	A02B–0236–K130	
	For 12.1" LCD	A02B–0236–K118	
	For 15.0" LCD	A08B–0082–K020	
Pen for touch panel		A02B–0236–K111	

See Subsection 5.10.2 for a difference between (1)(*) and (2)(*).

C BOOT SYSTEM

C.1 OVERVIEW 916
C.2 SCREEN CONFIGURATION AND OPERATING PROCEDURE 918
C.3 ERROR MESSAGES AND REQUIRED ACTIONS 933

C.1 OVERVIEW

The boot system load the CNC system software (flash RAM→DRAM), then starts it so that software can be executed.
The boot system provides the following maintenance functions for the CNC:

(1) Registering a file in flash ROM
- Reads a file from a memory card, in FAT format, into flash ROM.

(2) Checking a file (series and edition) in flash ROM

(3) Deleting a file from flash ROM

(4) Batch saving and restoration of files of parameters and programs backed up by battery (SRAM area), to and from a memory card

(5) Saving a file in flash ROM to a memory card

(6) Formatting of a memory card

(7) Deleting a file from a memory card

This manual describes the activation of the boot system, as well as the screen displays and operation for the functions listed above.

CAUTION
This control unit supports the use of a memory card as an input/output device. When a flash card is used, however, data can be written to a FANUC–recommended card only. Data can be read in the same way as with an ordinary SRAM card, provided the data has been saved in FAT format. Note that, when a flash card is used, the card capacity is reduced by 128KB.
See the order list for details of the supported memory card types.

C.1.1 Starting the Boot System

In ordinary system activation, the boot system automatically transfers files from flash ROM to DRAM in the background.
The user is not aware of this operation. However, the boot system must be operated manually, from menu screen, when maintenance is to be carried out or when the flash ROM does not contain a required file.

1 In system maintenance, for example, to replace a file in ROM
Operation : Turn the power on by simultaneously pressing the two soft keys at the right end.

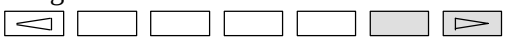

Hold down the two keys until the boot system screen appears.

If soft keys are not provided (for example, when a touch pad is being used), use the MDI numeric keys. Hold down the 6 and 7 keys until the boot system screen appears.

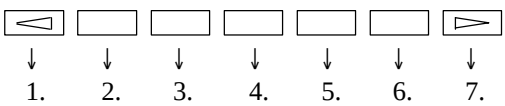

2 When the flash memory does not contain a file required to start the CNC

Immediately after the CNC is turned on, the boot system starts transferring files from flash ROM to DRAM. If, for some reason, a file required to start the CNC (NC basic) is not in flash ROM or has been destroyed, the boot system is automatically started.

C.1.2 System Files and User Files

The boot system organizes files in flash ROM into two main groups : system files and user files. These two file types have the following characteristics :

- **System files** — CNC and servo control software provided by FANUC
- **User files** — PMC sequence program (ladder), P–CODE macro program, and other user–created files

C.1.3 Boot Slot Configuration Screen

When CAP–II board or LCB (loader control board) is mounted on the CNC, we have to access to SRAM that mounted on additional board. So, the boot system displays BOOT SLOT CONFIGURATION screen that to select a access board.

- **Screen configuration**

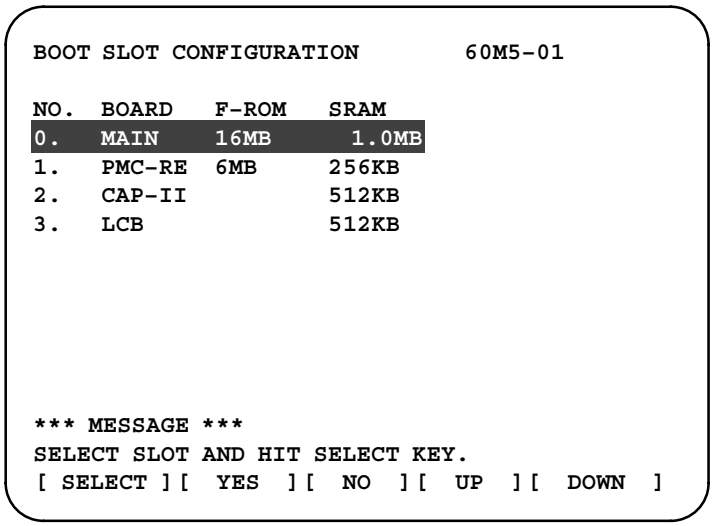

(1): Screen title.

(2): Flash memory size and SRAM size of each board.

(3): Message

- **Operation**

Press the **[UP]** or **[DOWN]** soft key to move the cursor, and select board to press the **[SELECT]** soft key.

C.2 SCREEN CONFIGURATION AND OPERATING PROCEDURE

When the boot system is first started, the MAIN MENU screen is displayed. This screen is described below :

• MAIN MENU screen

```
(1)  SYSTEM MONITOR MAIN MENU            60M5-01

(2)  1. SYSTEM DATA LOADING
(3)  2. SYSTEM DATA CHECK
(4)  3. SYSTEM DATA DELETE
(5)  4. SYSTEM DATA SAVE
(6)  5. SRAM DATA BACKUP
(7)  6. MEMORY CARD FILE DELETE
(8)  7. MEMORY CARD FORMAT


(9)  10. END

     *** MESSAGE ***
(10) SELECT MENU AND HIT SELECT KEY.
     [ SELECT ][  YES  ][  NO  ][  UP  ][  DOWN  ]
```

(1) : Screen title. The series and edition of the boot system appear at the right end.

(2) : Function for writing data to flash ROM.

(3) : Function for checing the edition of a file in ROM.

(4) : Function for deleting a file from flash ROM.

(5) : Function for making a backup copy of the data stored on the memory card.

(6) : Function for making a backup copy of the data in SRAM.

(7) : Function for deleting a file from a memory card.

(8) : Function for formatting a memory card.

(9) : Function for terminating the boot system and starting the CNC.

(10) : Condensed guidance or error message

• Operating procedure

Press the **[UP]** or **[DOWN]** soft key to select the desired function. After positioning the cursor to the desired function, press the **[SELECT]** soft key. Before executing a function, the system my request confirmation from the operator by having him/her press the **[YES]** or **[NO]** soft key.

• Basic operation

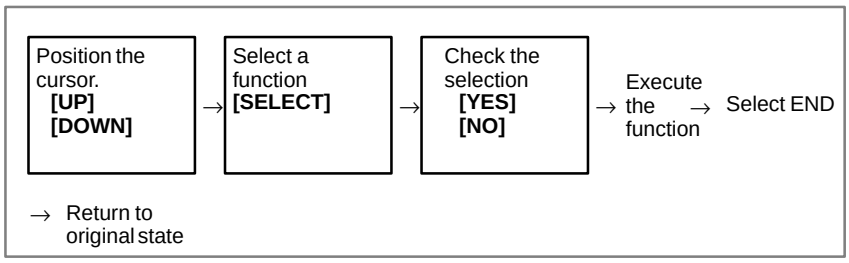

C.2.1 System Data Loading Screen

- **Description**

This screen is used to read a system or user file from a memory card into flash ROM.

- **Screen configuration**

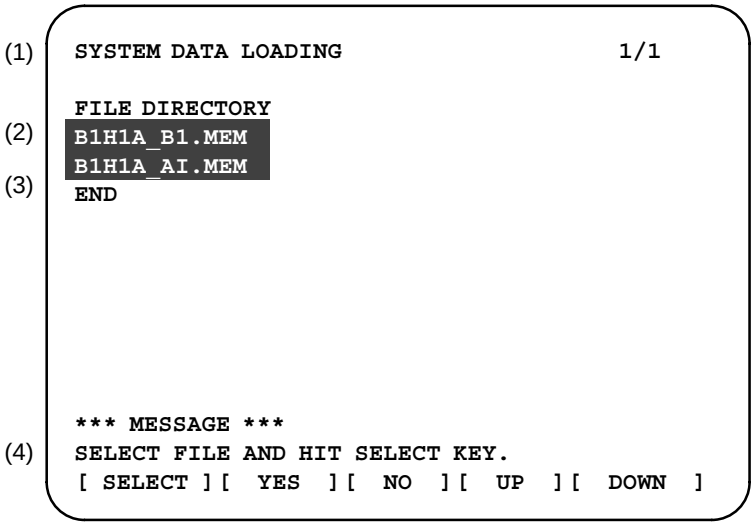

(1): Screen title. The page number (n) and total number of pages (m) are displayed, in n/m format, at the right end.

(2): Files on the memory card

(3): Option for returning to previous menu Message

(4): Message

- **Operating procedure**

1 Position the cursor to the file to be read from the memory card and written to flash ROM. Then, press the **[SELECT]** soft key.

A single page can list up to eight file names. If the memory card contains nine or more files, the remaining files are displayed on another page.

To display the next page, press the [▷] soft key.

To display the previous page, press the [◁] soft key. The END option is displayed on the last page.

The END option is displayed on the last page.

2 After a file has been slected, the system asks whether that file is to be loaded.

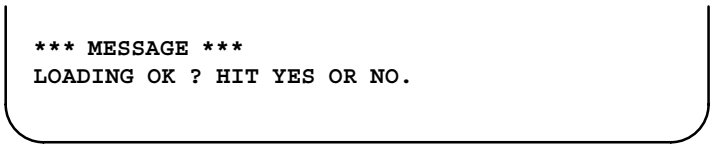

3 To start loading, press the **[YES]** soft key. To cancel, press the **[NO]** key.

```
*** MESSAGE ***
LOADING FROM MEMORY CARD.
```

4 When loading terminates normally, the system displays the following message. Press the **[SELECT]** soft key. If an error occurs, see C.3

```
*** MESSAGE ***
LOADING COMPELETE. HIT SELECT KEY.
```

- **Others**

1 Counter display while a file is being loaded

While a file is being loaded, the address of the data currently being accessed is displayed.

```
*** MESSAGE ***
LOADING FROM MEMORY CARD.
ADDRESS 001:          ← The counter appears under the
    (1)                 message fild.
```

(1): Number of 128–KB management unit in flash ROM

2 File name in flash ROM

The boot system identifies a file in flash ROM by the first four characters of the ID in the header. If flash ROM has a file of the same type as a file to be read from the memory card, the file in flash ROM is deleted before the file on the memory card is read. The following table lists the IDs in the header and the contents. Note that these IDs are subject to change without prior notice.

File name	Contents	File type
NC BASIC	Basic 1	System file
NC 2BSIC	Basic 2	System file
DGB0SRVO	Servo	System file
GRAPHIC	Graphic	System file
NC□ OPTN	Optional□	System file
PS□****	PMC control software, etc.	System file
ETH2 EMB	Embeddedethernet	System file
PCD ****	P–CODE macro file/ OMM	User file
CEX ****	C–languageexecutor	User file
PMC - ****	Ladder software	User file
PMC@****	Ladder software for the loader	User file

□ : A numeric character, *: An alphabetic character

C.2.2 System Data Check Screen

- **Description**

This screen is used to list files in flash ROM, together with the corresponding numbers of 128–KB management units in each file and the series and edition of the software.

- **Screen configuration**

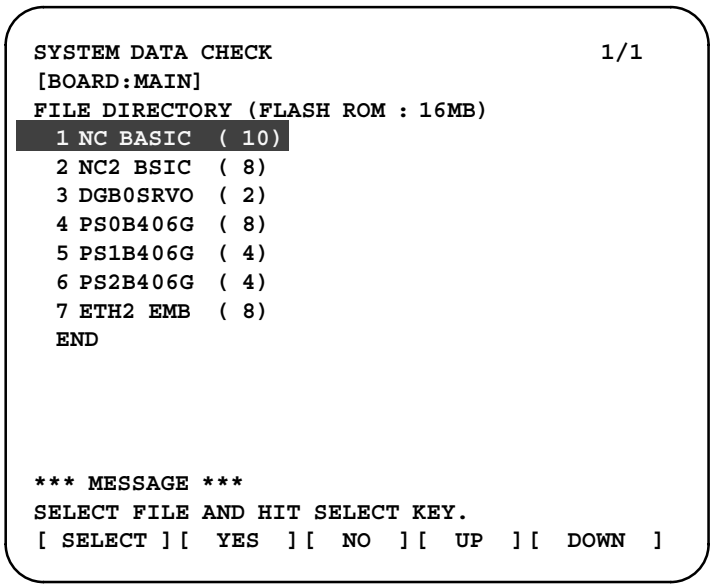

(1): Screen title

(2): Names of accessing board

(3): Names of files in flash ROM The number of management units constituting each file appears in parentheses to the right of the file name.

(4): Returning to the previous menu
If flash ROM contains many files, END is sometimes not displayed. In this case, press the continuous menu key (▷) of the soft key display several times. Then, END appears at the end of files.

(5): Message

- **Operating procedure**

1 Select the file whose details are required. For example, select “1 NC BASIC (10).”

2 The numbers of management units in the selected file are listed, together with the series and edition of the software in each management unit. After checking the listed data, select the **[SELECT]** soft key to return to the file selection screen.

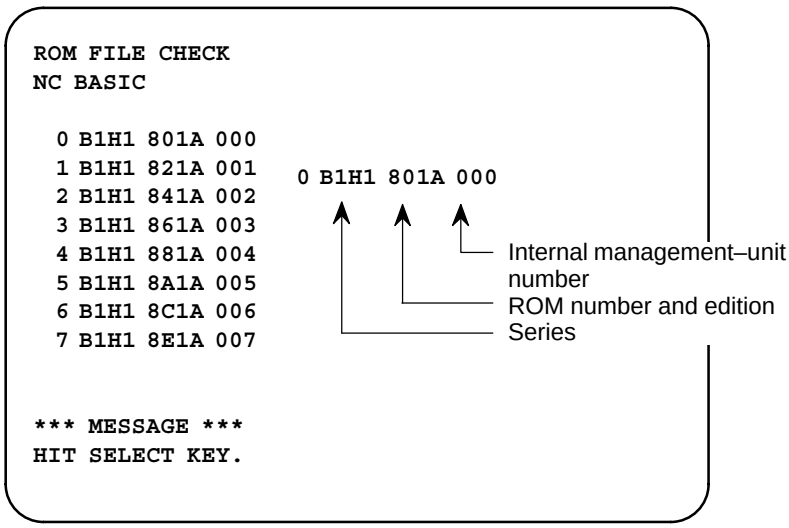

- **Others**

Parity information for the system file and user file

The NC BASIC, DGB0SRVO, and other system files in flash ROM contain parity information in each management unit. If the file name field or parity field on the check screen contains a non–ASC II character or an “@”, the flash ROM may have been destroyed or a damaged file may have been read. Re–read the data from the memory card.

The PMC–SB, PCD 0.5M, and other user files do not contain parity information in each management unit. A non–ASCII character or an “@” may appear in the series/edition information. In this case, it does not indicate that the file has been damaged.

C.2.3 System Data Delete Screen

- **Description**

This screen is used to delete a user file from flash ROM.

- **Screen configuration**

```
(1) SYSTEM DATA CHECK                          1/1
(2) [BOARD:MAIN]
    FILE DIRECTORY (FLASH ROM : 16MB)
(3)   1 NC BASIC  ( 10)
      2 NC2 BSIC  ( 8)
      3 DGB0SRVO  ( 2)
      4 PS0B406G  ( 8)
      5 PS1B406G  ( 4)
(4)   6 PS2B406G  ( 4)
      7 ETH2 EMB  ( 8)
      END




(5) *** MESSAGE ***
    SELECT FILE AND HIT SELECT KEY.
    [ SELECT ][  YES  ][  NO  ][  UP  ][  DOWN  ]
```

(1): Screen title

(2): Names of accessing board

(3): Names of files in flash ROM The number of management units constituting each file appears in parentheses to the right of the file name.

(4): Returning to the previous menu
If flash ROM contains many files, END is sometimes not displayed. In this case, press the continuous menu key (▷) of the soft key display several times. Then, END appears at the end of files.

(5): Message

- **Operating procedure**

1 Position the cursor to the name of the file to be deleted. Press the **[SELECT]** soft key.

2 The system displays the following confirmation message :

```
*** MESSAGE ***
DELETE OK ? HIT YES OR NO.
```

3 To start the deletion, press the **[YES]** key. To cancel, press **[NO]**.

```
*** MESSAGE ***
DELETING ROM FILE IN FLASH MEMORY.
```

4 When deletion terminates normally, the system displays the following message. Press the **[SELECT]** key.

```
*** MESSAGE ***
DELETING COMPLETE. HIT SELECT KEY.
```

- **Others**

1 System files and user files on SYSTEM DATA DELETE screen
The system files are protected from accidental deletion. User files, however, are not protected. Protected system files can be overwritten from the SYSTEM DATA LOADING screen.

C.2.4 SYSTEM DATA SAVE Screen

- **Description**

This screen is used to write a user file in flash ROM to a memory card. Only user files can be saved from flash ROM to a memory card. System files cannot be saved.

- **Screen configuration**

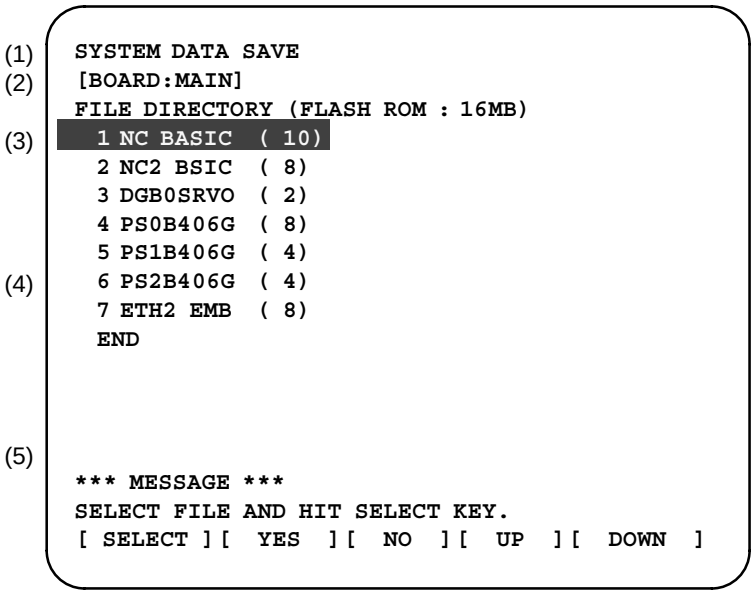

(1): Screen title

(2): Names of accessing board

(3): Names of files in flash memory The number of management units constituting each file appears in parentheses to the right of the file name.

(4): Returning to the previous menu
If flash ROM contains many files, END is sometimes not displayed. In this case, press the continuous menu key (▷) of the soft key display several times. Then, END appears at the end of files.

(5): Message

- **Operating procedure**

1 Position the cursor to the name of the file to be deleted. Press the **[SELECT**] soft key.

2 The system displays the following confirmation message :

```
*** MESSAGE ***
SAVE OK ? HIT YES OR NO.
```

3 To start saving, press the **[YES]** key. To cancel, press **[NO]**.

```
*** MESSAGE ***
WRITING FLASH ROM FILE TO MEMORY CARD.
SAVE FILE NAME : PMC_RB.000
```

4 When saving terminates normally, the system displays the following message. Press the **[SELECT]** key. The names of files written to the memory card are listed. Check the file names by, for example, making a note of the list.

```
*** MESSAGE ***
FILE SAVE COMPELETE. HIT SELECT KEY.
SAVE FILE NAME : PMC_RB.000
```

- **Others**

1 System files and user files on SYSTEM DATA SAVE screen

The SYSTEM DATA SAVE function provides a safeguard against free copying of the system files.

User files, however, are not protected.

2 Names of saved files

Files saved from flash ROM to a memory card have the following names :

Flash ROM		File name in Memory card
PMC–SB	→	PMC_SB. XXX
PMC 0.5M	→	PCD_0.5M.XXX
PMC 1.0M	→	PCD_10M.XXX
PMC 1.5M	→	PCD_15M.XXX
CEX1.0M	→	CEX_10M.XXX
CEX 2.0M	→	CEX_20M.XXX

XXX corresponds to the file extension of MS–DOS format files. A number from 000 to 031 is specified for XXX. For example, if the PMC–RB file in flash ROM is saved to a memory card that does not yet contain a file whose name begins with “PMC–RB”, the saved file is named PMC–RB.000. If, however, that file is saved to a memory card that already contains a file named PMC–RB.000, the saved file is named PMC–RB.001. As files are added, the extension is incremented up to a maximum of PMC–RB.031. Any no–longer used numbers in the sequence of the extension numbers are used in as cending order. If two or more files having identical names but different extension numbers are normally saved to the memory card, check the file names displayed subsequently.

C.2.5 SRAM DATA BACKUP Screen

- **Description**

This screen is used to collectively save and restore parameters, programs, and other data, retained after the CNC power in SRAM is turned off, to and from a memory card.

- **Screen configuration**

Select “4 SRAM DATA BACKUP” on the SYSTEM MONITOR MAIN MENU screen. The following screen is displayed.

```
(1)  SRAM DATA BACKUP
(2)  [BOARD:MAIN]
(3)    1. SRAM BACKUP (CNC → MEMORY CARD)
       2. RESTORE SRAM (MEMORY CARD → CNC)
(4)    END

(5)    SRAM SIZE   :  256K (BASIC)
(6)    FILE NAME   :  SRAM256A. FDB









     *** MESSAGE ***
(7)  SELECT MENU AND HIT SELECT KEY.
     [ SELECT ][  YES  ][  NO  ][  UP  ][  DOWN  ]
```

(1): Screen title
(2): Names of accessing board
(3): Menu
(4): Returning to the previous menu
(5): Size of SRAM mounted on the CNC
(6): File name
(7): Message

- **Operating procedure**

[Backing up data]

1 Select “1. SRAM BACKUP.” The following confirmation message is displayed. The backup file name may be displayed according to the SRAM capacity.

2 Press **[YES]** to start backup.

```
*** MESSAGE ***
BACKUP SRAM DATA OK ? HIT YES OR NO.
```

3 If a backup file is already on the memory card, you will be prompted to confirm whether to permit overwriting.

4 The name of the file being written to the memory card is displayed in the FILE NAME: field.

```
SRAM SIZE   : 0.5MB (BASIC)
FILE NAME   : SRAM0_5A.FDB  → MEMORY CARD
                                  ↖ Name of the file being saved

*** MESSAGE ***
SRAM DATA WRITING TO MEMORY CARD.
```

5 Upon terminating normally, the system displays the following message. Press the **[SELECT]** soft key.

```
*** MESSAGE ***
SRAM BACKUP COMPLETE. HIT SELECT KEY.
```

[Restoring the data]

1 Select “2. RESTORE SRAM.” The system displays the following message. Press the **[YES]** key.

```
*** MESSAGE ***
RESTORE SRAM DATA OK ? HIT YES OR NO.
```

2 The system displays the following message during restoration.

```
*** MESSAGE ***
RESTORE SRAM DATA FROM MEMORY CARD.
```

3 Upon terminating normally, the system displays the following message. Press the **[SELECT]** soft key.

```
*** MESSAGE ***
RESTORE COMPLETE. HIT SELECT KEY.
```

- **Others**

1 Name of backup file

The name of the backup file written to the memory card by the SRAM backup function depends on the size of the SRAM installed in the CNC.

When the size of SRAM is 1MB or larger, backup files are created in units of 512 KB.

Number of files / SRAM size	1	2	3	4	5	6
256KB	SRAM256A.FDB					
0.5MB	SRAM0_5A.FDB					
1.0MB	SRAM1_0A.FDB	SRAM1_0B.FDB				
2.0MB	SRAM2_0A.FDB	SRAM2_0B.FDB	SRAM2_0C.FDB	SRAM2_0D.FDB		
3.0MB	SRAM3_0A.FDB	SRAM3_0B.FDB	SRAM3_0C.FDB	SRAM3_0D.FDB	SRAM3_0E.FDB	SRAM3_0F.FDB

The backup file for SRAM on the PMC–RE, CAPII, or LCB board will have the following extension:

Board	MAIN	PMC–RE	CAPII	LCB
Extension	FDB	PMC	CAP	LCB

CAUTION

If data such as parameters was restored from a memory card to SRAM in a system using an absolute pulse coder, set bit 4 (APZ) of parameter No. 1815 to 0, and set the reference point again.

C.2.6 MEMORY CARD FILE DELETE Screen

- **Description**

This screen is used to delete a file from a memory card.

- **Screen configuration**

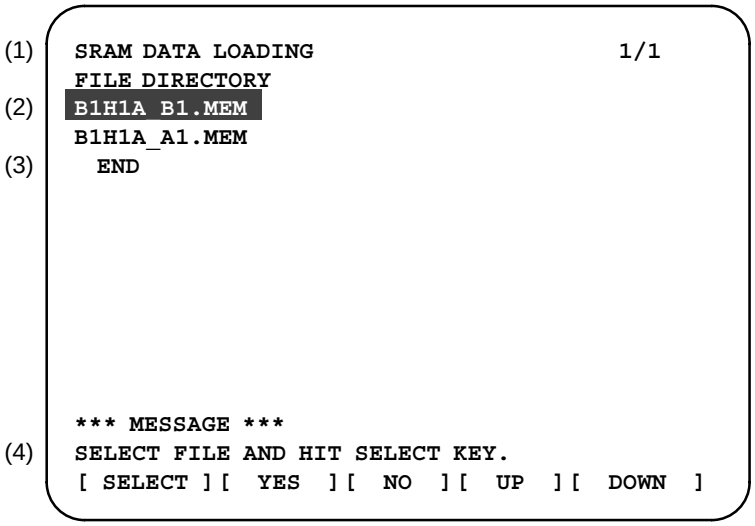

(1): Screen title. Tlhe current page number (n) and the total number of pages (m) are displayed, in n/m format, at the right end.

(2): Files on the memory card

(3): Option for returning to the previous menu

(4): Message

- **Operating procedure**

1 Press the **[SELECT]** key to select the name of the file to be deleted from the memory card.

2 The system displays the following confirmation message. Press the **[YES]** key.

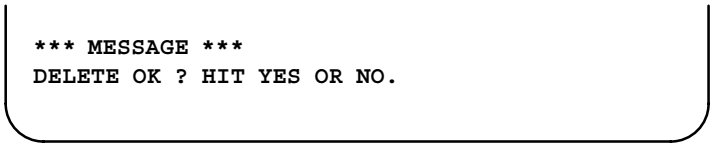

3 When a file has been deleted normally, display the following message. Press the **[SELECT]** key.

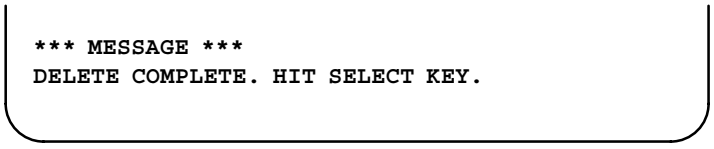

C.2.7 MEMORY CARD FORMAT Function

- **Description**

This function is used to format a memory card. Memory cards must be formatted before they can be used for the first time or before they can be re–used after their data has been destroyed or lost because of, for example, battery failure.

- **Operating procedure**

1 From the SYSTEM MONITOR MAIN MENU screen, select “7. MEMORY CARD FORMAT.”

2 The system displays the following confirmation message. Press the **[YES]** key.

```
*** MESSAGE ***
MEMORY CARD FORMAT OK ? HIT YES OR NO.
```

3 The system displays the following message during formatting :

```
*** MESSAGE ***
FORMATTING MEMORY CARD.
```

4 When a card has been formatted normally, the system display the
- following message.
- Press the **[SELECT]** key.

```
*** MESSAGE ***
FORMAT COMPLETE. HIT SELECT KEY.
```

C.2.8 LOAD BASIC SYSTEM Function

- **Description**

The function is used to terminate the boot system and activate the CNC.

- **Operating procedure**

From the MAIN MENU screen, select “9. END.” The system displays the “ARE YOU SURE? HIT YES OR NO” message. To terminate the boot system and activate the CNC, press the **[YES]** soft key. Press the **[NO]** soft key, and you will be brought back to the main menu.

```
*** MESSAGE ***
ARE YOU SURE ? HIT YES OR NO.

[ SELECT ][  YES  ][  NO  ][  UP  ][  DOWN  ]
```

1 After pressing the **[YES]** soft key

The system checks the NC BASIC system file in the flash ROM. The system displays the following message :

```
*** MESSAGE ***
CHECK CNC BASIC SYSTEM.

[ SELECT ][  YES  ][  NO  ][  UP  ][  DOWN  ]
```

When the NC BASIC system file is found to be normal, the system sends the system file to DRAM and starts the NC basic system. During loading, the system blinks the following message.

```
*** MESSAGE ***
   LOADING BASIC TO DRAM

[ SELECT ][  YES  ][  NO  ][  UP  ][  DOWN  ]
```

If the contents of the NC BASIC SYSTEM file are found to have been damaged or destroyed, the system returns to the processing selection state, in exactly the same way as when the **[NO]** soft key is pressed.

2 If the **[NO]** soft key is pressed, the system returns to the processing selection state as shown below :

```
SYSTEM MONITOR MAIN MENU            60M5-01

1. SYSTEM DATA LOADING
2. SYSTEM DATA CHECK
3. SYSTEM DATA DELETE
4. SYSTEM DATA SAVE
5. SRAM DATA BACKUP
6. MEMORY CARD FILE DELETE
7. MEMORY CARD FORMAT


10.END

*** MESSAGE ***
SELECT MENU AND HIT SELECT KEY.
[ SELECT ][  YES  ][  NO  ][  UP  ][  DOWN  ]
```

C.3 ERROR MESSAGES AND REQUIRED ACTIONS

The following table lists and explains error messages in alphabetical order.

	Message	Description and required action
B	BOOT ROM PARITY. PLEASE POWER OFF.	The contents of flash memory containing boot software was destroyed. Replace the CPU card.
C	CHANGE MEMORY CARD. AND HIT YES OR NO.	The memory card becomes full in the middle of SRAM backup operation. Replace the card with a memory card containing enough free space.
D	DELETE ERROR. HIT SELECT KEY.	An attempt to delete a file from flash ROM was unsuccessful. Retry the deletion. If the second attempt also fails, the flash ROM may have been damaged or destroyed. Replace the flash ROM module.
	DEVICE ERROR (CNC x)	An attempt to write data to flash ROM was unsuccessful. Retry the write operation. If the second attempt also fails, the flash ROM may have been damaged or destroyed. Repalce the flash ROM module.
F	FILE SAVE ERROR. HIT SELECT KEY.	An attempt to write a file to a memory card was unsuccessful. Check that the memory card is not damaged. Note) Check that the memory card's battery is not exhusted, that its circuitry has not been damaged, and that it is securely inserted into its slot.
	FLASH MEMORY NO SPACE	There is insufficient free flash ROM to store the selected file. Delete any unnecessary files from flash ROM.
	FLASH ROM MODULE NOT EXIST. HIT SELECT.	The flash ROM module is not mounted on that CNC system. Put the flash ROM module on the board.
G	GRAPHIC SOFT IS NOT FOUND. BOOT STOP.	Graphic software is required. Load appropriate graphic software for the hardware in flash ROM.
I	ILLEGAL FORMAT FILE	The selected file cannot be read into flash memory. The selected file or the header information for flash ROM may have been damaged or destroyed.
	ILLEGAL FROM MODULE. HIT SELECT KEY.	The flash ROM module ID is illegal. Check the drawing No. of the flash ROM module.
	ILLEGAL SRAM MODULE. HIT SELECT KEY.	The SRAM module ID is illegal. Check the drawing No. of the SRAM module.
L	LOADING ERROR. HIT SELECT KEY.	An error occurred while loading data into flash ROM. Do not touch the memory card while loading data.

	Message	Description and required action
M	MAX EXTENSION OVER. HIT SELECT KEY.	The extension number added to a file name exceeds 031. Delete any unnecessary backup files from the memory card.
	MEMORY CARD BATTERY ALARM. HIT SELECT.	The memory card's battery is exhausted. Replace the battery.
	MEMORY CARD FULL. HIT SELECT KEY.	The memory card is full. Delete any unnecessary files from the memory card. Alternatively, replace the memory card with another card having sufficient free space.
	MEMORY CARD IS NOT AVAILABLE. HIT SEL.	The use of this memory card is not supported. Use only FANUC–recommended memory cards, as described in the order list.
	MEMORY CARD MOUNT ERROR. HIT SELECT KEY	The memory card could not be accessed. Check that the memory card is normal.
	MEMORY CARD NOT EXIST. HIT SELECT KEY.	The memory card is not inserted into its slot. Check that the memory card is pushed fully home.
	MEMORY CARD PROTECTED.HIT SELECT KEY.	Although writing to the memory card was selected, the write inhibit switch is set. Disable the write inhibit switch. Note) Check that the memory card's battery is not exhusted, that its circuitry has not been damaged, and that it is securely inserted into its slot.
	MEMORY CARD TYPE IS NOT AVAILABLE.	Write has been attempted to an incompatible flash memory card. Use only the flash ROM cards recommended by FANUC. Recommended flash ROM cards are listed in the ordering list.
	MEMORY CARD RESET ERROR. HIT SELECT KEY.	Access to a memory card failed. The memory card's battery may have gone dead, the memory card may have been damaged electrically, or the memory card may not be inserted in the slot securely.
	MEMORY CARD WRITE ERROR. HIT SELECT KEY.	Access to the memory card has failed. Check whether the memory card is defective. Note) Check that the memory card's battery is not exhusted, that its circuitry has not been damaged, and that it is securely inserted into its slot.
N	NMI OCCURRED. PLEASE POWER OFF.	A hardware or software error occurred. Determine the procedure which causes the error, and report it to FANUC together with the series and edition of the boot software.
P	PLEASE FORMAT FLASH TYPE CARD.HIT SEL.	It is not possible to delete only specific files from a flash ROM card, due to the characteristics of the memory used. To delete a file it is necessary to delete all files on the card, by using the FORMAT function.
R	ROM PARITY ERROR: NC BASIC. HIT SELECT.	The NC BASIC is parity error. Check whether NC BASIC is in flash ROM, using SYSTEM DATA CHECK.
S	SRAM DATA BACKUP ERROR. HIT SELECT KEY.	An attempt to write a backup file to a memory card failed. Check that the memory card is normal. Note) Check that the memory card's battery is not exhusted, that its circuitry has not been damaged, and that it is securely inserted into its slot.
	SRAM PARITY OCCURRED. PLEASE POWER OFF.	A parity error was detected during backup operation of SRAM (Caution).

CAUTION

1 Action to be taken when an SRAM parity error is detected during backup of SRAM in the boot system

The SRAM area of each CNC shipped from the factory is cleared and is free of parity errors. However, shock applied to the CNC during transportation may cause a parity error in the SRAM area. A parity error may also occur in the SRAM area when the CNC was kept switched off for one year or longer, and the battery has been exhausted. If a parity error occurs in the SRAM area, the data held in the SRAM area is not guaranteed. However, the CNC does not always use the entire SRAM area. A parity error is not detected by hardware unless the part containing the error is read. Therefore, if a parity error occurs in an area not accessed by the CNC, the CNC may operate normally. The SRAM backup function of the boot system reads the entire SRAM area. So, a parity error may occur in the middle of backup operation even when the CNC has operated normally. In this case, the SRAM data of the CNC is not guaranteed, and the data cannot be backed up using the SRAM backup function of the boot system. Nevertheless, the CNC may operate normally. So, it is recommended that necessary data be backed up using the Floppy Cassette or Handy File, data all clear operation be performed, then the backed up data be restored in the CNC. Once all clear operation is performed, the parity error can be removed. Then, the SRAM backup function of the boot system can be used.

D MEMRY CARD SLOT

D.1 OVERVIEW 937
D.2 MEMORY CARD TYPES (FUNCTIONS) 938
D.3 HARDWARE CONFIGURATION 939

D.1 OVERVIEW

Whether a memory card slot is provided or not depends on the hardware configuration. See the following table:

Hardware configuration	Card slot on LCD unit	Card slot on control unit
Type 1	Provided	No card slot
Type 2 Type 6	Provided	Provided (This slot, however, cannot be used.)
Type 3	No card slot	Provided
Type 4 Type 5	No card slot (See NOTE given below.)	Provided

(Supplementary)

– Types 1 to 6 indicate hardware configuration. See Section D.3.
– When both the LCD unit and control unit have a memory card slot, only the memory card slot on the LCD unit can be used.

NOTE
When the hardware configuration is type 4 or type 5, software write operation and other operations are implemented by open CNC functions.

D.2 MEMORY CARD TYPES (FUNCTIONS)

SRAM memory card
FROM memory card — Data I/O
Flash ATA card
Modem card (for remote diagnosis)

NOTE
For details of the types of usable memory cards, see the ordering list.

D.3 HARDWARE CONFIGURATION

- **Type 1** LCD–mounted type

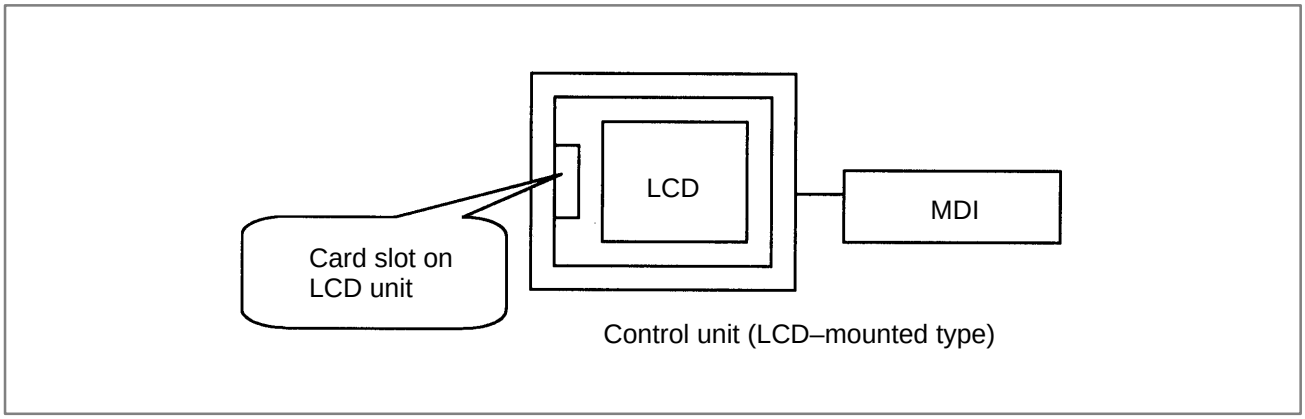

- **Type 2** Stand–alone type (with an LCD unit)

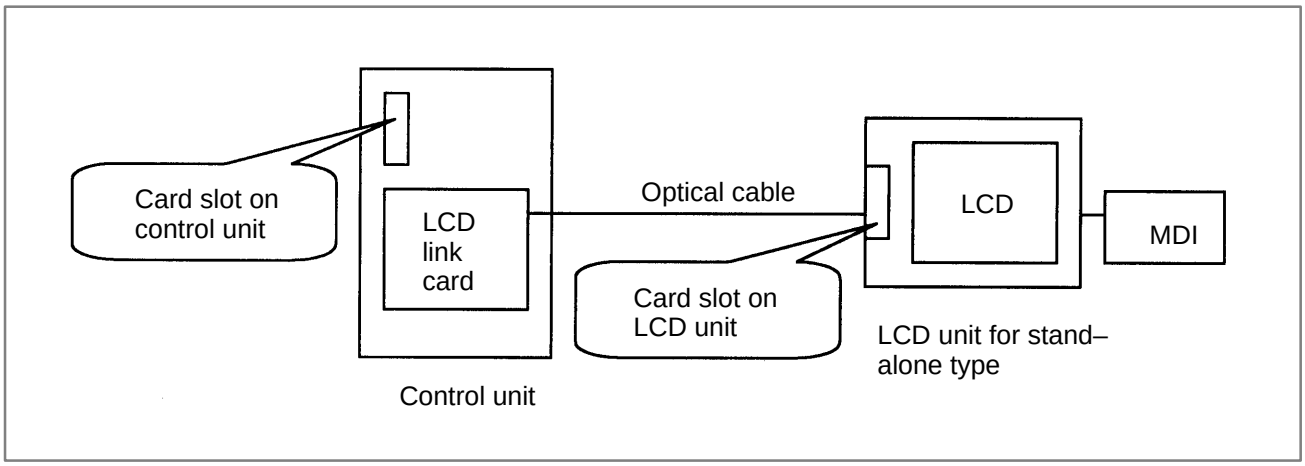

- **Type 3** Stand–alone type (with a CRT/MDI unit)

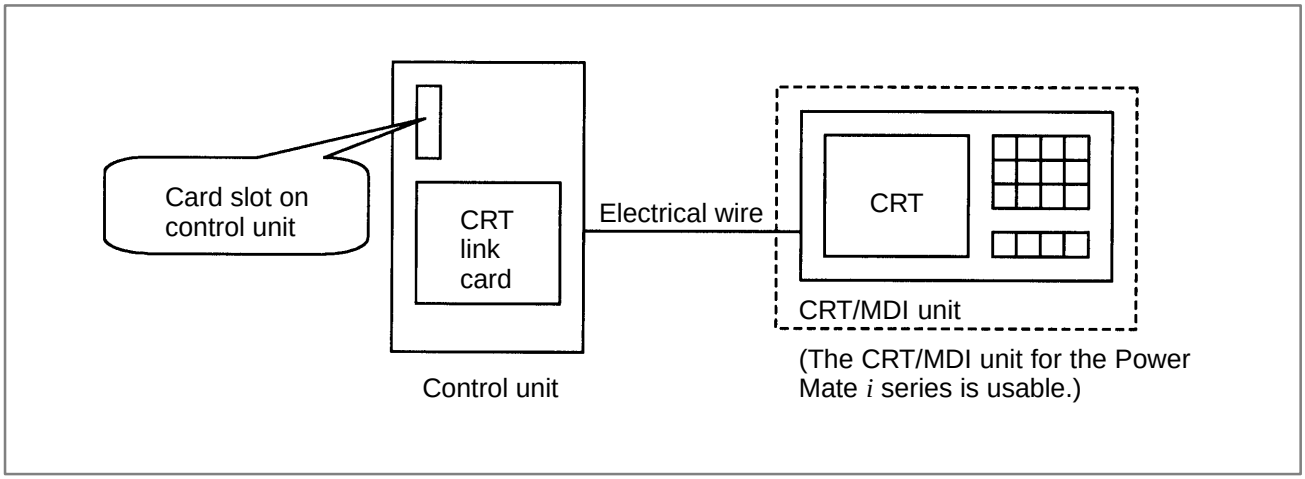

- **Type 4** Stand–alone type (with CNC display unit with PC functions or an PANEL *i* and FA keyboard or PC)

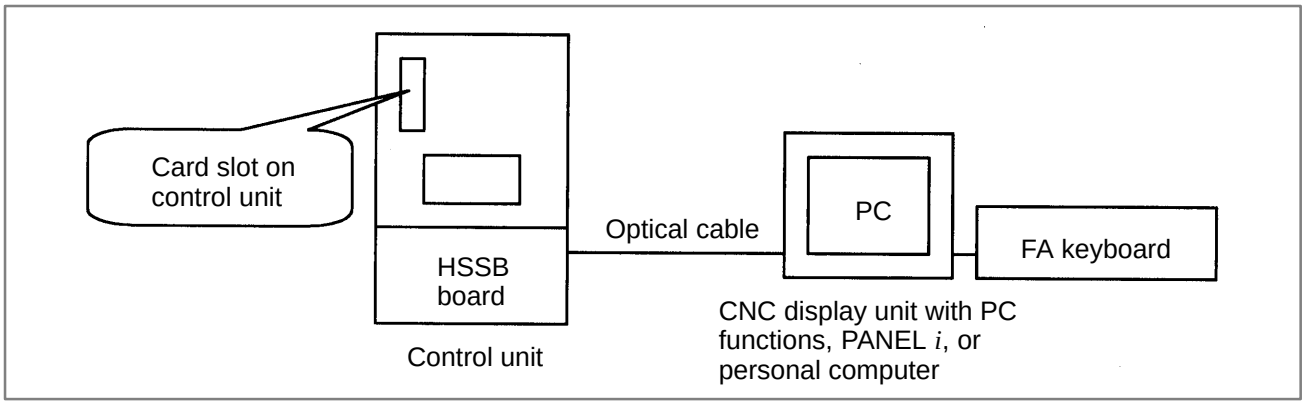

- **Type 5** Stand–alone type (with CNC display unit with PC functions or an PANEL *i* and FA keyboard or PC)

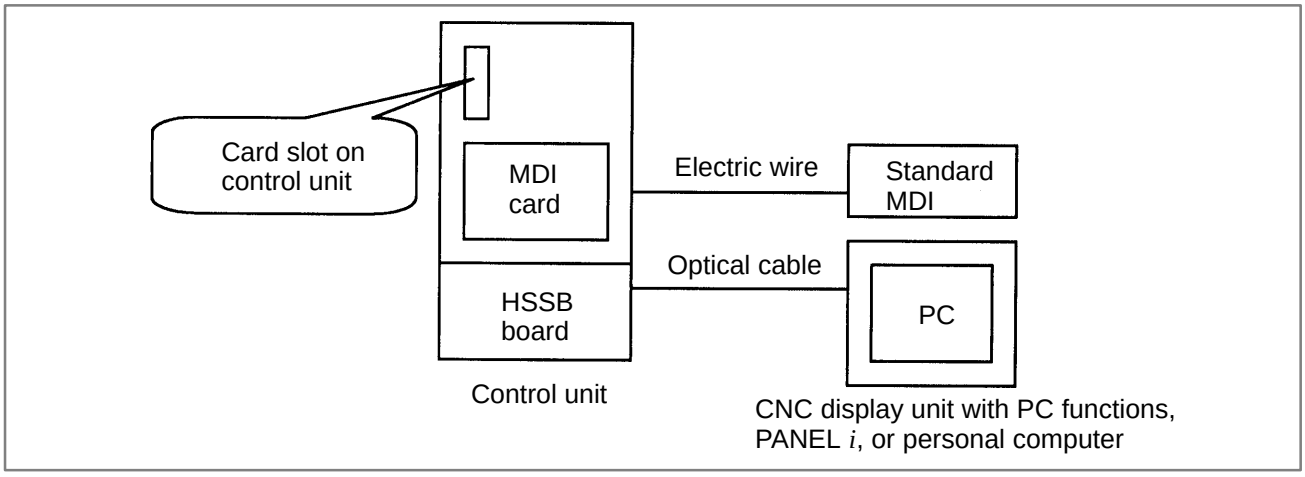

- **Type 6** Stand–alone type (with an LCD unit and MDI, CNC display unit with PC functions or an PANEL *i* and FA keyboard or PC)

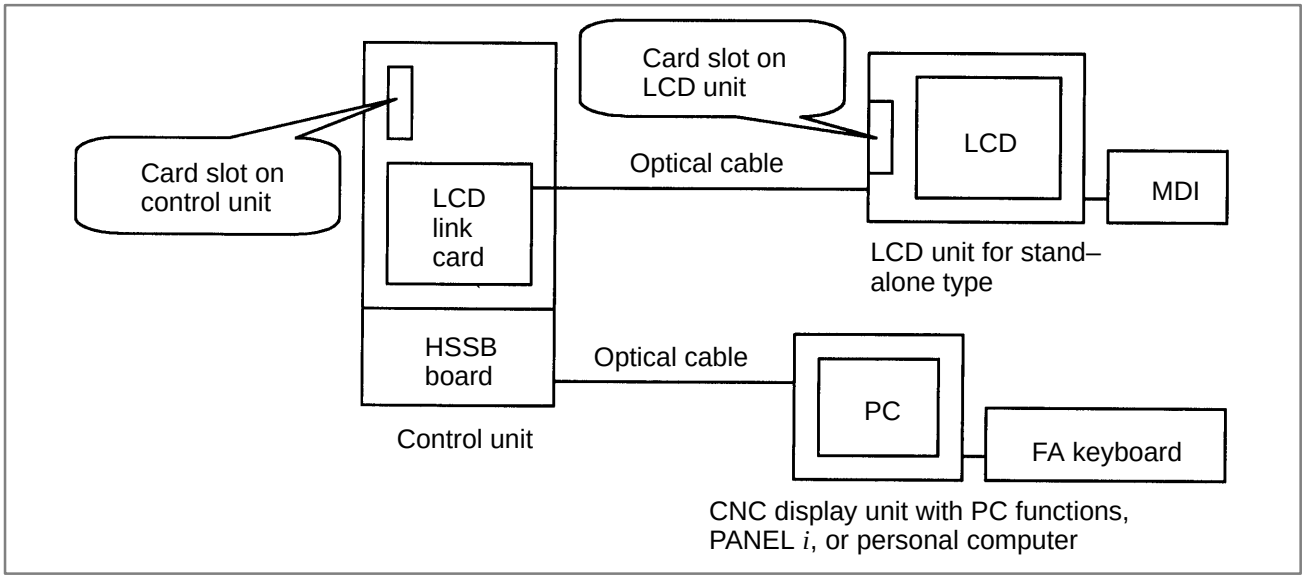

E LED DISPLAY AND MAINTENANCE OF STAND–ALONE TYPE UNIT

E.1 OVERVIEW 942
E.2 LAYOUT OF THE 7–SEGMENT LED AND SWITCHES 943
E.3 OPERATION 944

E.1 OVERVIEW

FANUC Series 16*i*/18*i*/21*i* (referred to as FS16*i* hereinafter) of stand–alone type is equipped with a 7–segment LED, rotary switch, and push switch.

When no MDI is included in the system configuration or when the MDI becomes defective and cannot be used, battery backed–up data can be saved and restored by using the rotary switch and push switch.

When the MDI can be used, use these switches for maintenance of the boot function.

E.2 LAYOUT OF THE 7–SEGMENT LED AND SWITCHES

The 7–segment LED, rotary switch, and push switch are located as shown below.

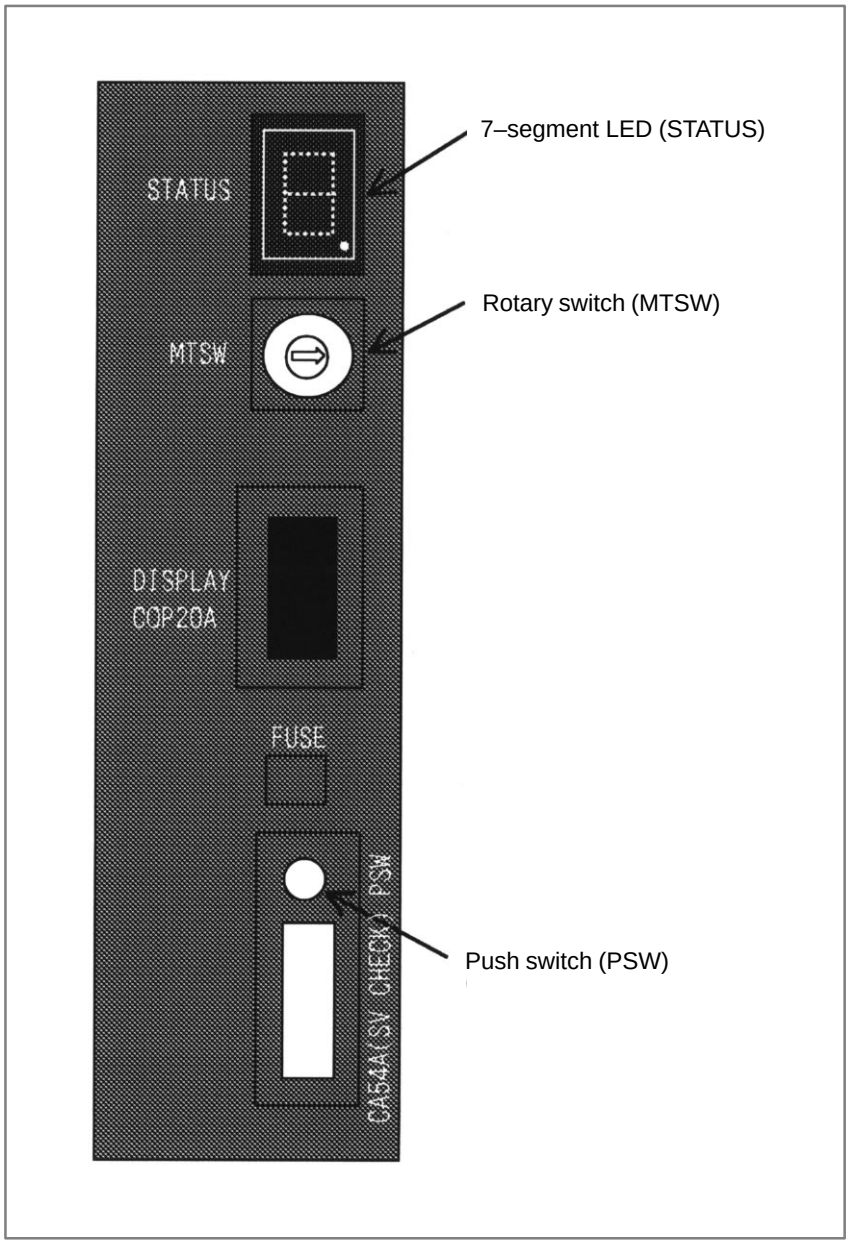

E.3 OPERATION

E.3.1 Operation Before Power–On

Before turning on the power, select a function number by using the rotary switch. When the power is turned on after the selection with the rotary switch, the number corresponding to the selected function number is indicated on the LED. The indication blinks at intervals of about one second.

E.3.2 Function Number

Each function is assigned a number. This number is called a function number hereinafter in this manual. The function numbers that can be selected with the rotary switch are listed below. Do not set the reserved function numbers. (If a reserved function number is set, the system operates as if function number 0 were selected.)

Function number	Explanation	Remarks
0	Normal state. After terminating maintenance operation, always set this number.	
1	Reserved	
2	Sets a device number for the display link function.	
3	Reserved	
4	Maintenance switch	
5	Memory all clear	
6	Reserved	
7	Reserved	
8	Saves battery backed–up main board data in a memory card at a time.	
9	Reserved	
A	Restores battery backed–up main board data from a memory card at a time.	
B	Reserved	
C	Reserved	
D	Reserved	
E	Reserved	
F	Reserved	

E.3.3 Seven–Segment LED Display

E.3.3.1 NC status display

Number displayed on LED	Blink/not blink	Description
	Not blink	Automatic operation is paused, stopped, or reset.
(Rotation of character)	Not blink	Automatic operation start signal When STL <F000#5> = 1
Number (to)	Blink	System alarm status
Number (to)	Not blink	Status change at power–on

E.3.3.2 LED display during automatic operation

LED indication	Description
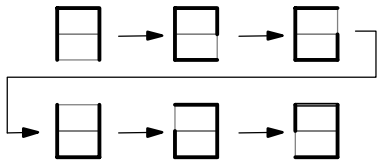	Automatic operation start signal When STL <F000#5> = 1

E.3.3.3 LED display when the push switch is pressed

Number displayed on LED	Blink/not blink	Description
	Not blink	The push switch has been pressed normally.

E.3.3.4
LED display when a system alarm is issued

When a system alarm is issued, a number blinks on the 7–segment LED.

Number on LED (blinking)	System alarm number	Type of system alarm
	In the 900's	ROM PARITY
	In the 910's	SRAM PARITY, DRAM PARITY
	In the 920's	SERVO ALARM
	In the 930's	CPU INTERRUPT, SRAM ECC ERROR
	In the 950's	PMC SYSTEM ALARM
	In the 970's	NON MASK INTERRUPT, BUS ERROR
	Others	Other system alarms

E.3.3.5 Display on the 7–segment LED at power–on

Number displayed on LED	On/off status of 4 LEDs	Meaning
	□□□□	Power is not on.
	■■■■	Power is turned on, but the CPU does not yet start.
	■■■■	NC system loading is started by the boot system.
	□■■■	The NC system has started, and RAM initialization has terminated.
	■□■■	Wait for ID setting for each board
	□□■■	ID setting for each board has terminated, and CRT initialization has terminated.
	■■□■	FANUC bus initialization has terminated.
	□■□■	Loading from F–ROM has terminated, PMC initialization has terminated, and the series/edition screen is displayed.
	■□□■	Hardware configuration information setting for each module has completed.
	□□□■	PMC ladder initialization has completed.
	□■■□	Wait for digital servo and spindle initialization
	■■■□	Digital servo and spindle initialization has completed.
	■□□□	Initialization has completed. In normal operation state.

□ : Off ■ : On

E.3.4 Operation of Each Function

- **Function number 2**

This function sets a device number for the display link function.

(1) Check that number 2 blinks on the LED, and press the push switch.

(2) Number 2 is displayed on the LED. Press the push switch.

(3) Sixteen numbers from 0 to F are displayed on the LED one by one at intervals of about one second. When the device number you want to set appears on the LED, press the push switch.

(4) The selected device number blinks on the LED. Press the push switch.

(5) The device number used for the display link function is displayed on the LED.

- **Function number 4**

This function allows the maintenance switches to be used to display data without using any display unit.

(1) Check that number 4 blinks on the LED. Press the push switch.

(2) Number 4 is displayed on the LED. Press the push switch.

(3) Number 0 is displayed on the LED. Press the push switch.

(4) Numbers 0 and 2 are displayed alternately on the LED at intervals of about one second. When 2 is displayed, press the push switch.

(5) The device number used for the display link function is displayed on the LED.

- **Function number 5**

This function clears all the battery backed–up SRAM data. The device number for the display link function is also cleared. Once the device number has been cleared, the device number is set to 0.

(1) Check that number 5 blinks on the LED. Press the push switch.

(2) Number 5 is displayed on the LED. Press the push switch.

(3) The display on the LED changes from – to F to 9 to 8 to 7 to 6 to 5 to 4 to 3 to 2 to 1 to 0 in this order.

(4) After all–clear operation terminates normally, the LED display stops changing at number 0.

(5) Turn off the power, set the rotary switch to 0 (normal state), then turn on the power again.

- **Function number 8**

This function saves battery backed–up main board data in a memory card at a time. The data saved using this function can be restored at a time by performing the operation for function number A or by using the SRAMDATABACKUP function of the boot function.

(1) In the memory card slot (MEMORY CARD CNM1B) of the control unit, insert a formatted memory card having at least 512 KB of available space.

(2) Check that number 8 blinks on the LED, and press the push switch.

(3) While data is being saved in the memory card, the LED indication turns clockwise.

(4) If the data cannot fit in one memory card, number 3 blinks. Replace the memory card with another one, and press the push switch.

(5) If the protect switch of the memory card is not released or if the battery capacity of the memory card is insufficient, number 2 blinks on the LED. Replace the memory card with another one, and press the push switch.

(6) When the data has been saved normally, number 0 is displayed on the LED. If the data cannot be saved normally, number 1 is displayed on the LED.

(7) If SRAM PARITY occurs during data save operation, number 1 blinks on the LED. In this case, it is impossible to save the data at a time. Back up individual data items one by one, then perform all–clear operation.

- **Function number A**

This function restores battery backed–up main board data from a memory card at a time.

(1) Insert the memory card in the memory card slot (MEMORY CARD CNM1B) of the control unit.

(2) Check that A blinks on the LED, and press the push switch.

(3) While data is being restored from the memory card, the LED indication turns counterclockwise.

(4) If the entire data cannot be restored from the single memory card, number 3 blinks. Replace the memory card with the next memory card, and press the push switch.

(5) If the memory card cannot be recognized correctly, number 2 blinks on the LED. Check the memory card status, and press the push switch.

(6) When the data has been restored normally, number 0 is displayed on the LED. If the data cannot be restored normally, number 1 is displayed on the LED.

F MAINTENANCE OF OPEN CNC (BOOT–UP AND IPL)

F.1 OVERVIEW 951
F.2 CHANGING START SEQUENCES 952
F.3 EXPLANATION OF SCREENS 954
F.3.1 Boot Screen 954
F.3.2 IPL Screen 958
F.4 OTHER SCREENS 961
F.4.1 CNC Alarm Screen 961
F.4.2 Status Screen 962
F.4.3 Option Setting Screen 964

F.1 OVERVIEW

When the 160*i*/180*i*/210*i* is used or the CNC is connected to the PC over HSSB, Ncboot32.exe can be used for the maintenance of the CNC. When the 160*is*/180*is*/210*is* is used, Ncbootis.exe can be used for the maintenance of the CNC. Unless otherwise specified, the following examples assume the use of Ncboot32.
Ncboot32.exe provides the following functions:

- BOOT screen (for CNC system data maintenance, SRAM backup, and so forth)
- IPL screen (for clearing SRAM, and so forth)
- Display of the CNC power–on screen
- Display of CNC alarm screen
- Re–connection in case of the occurrence of a communication error
- Start of a registered application program

Ncboot32.exe is copied in the System folder of Windows (System32 folder in Windows NT) at driver installation. At the start of Windows, Ncboot32.exe starts automatically, and resides in the system tray.

(Icon at the center)

Supplementary 1: Multi–connection

Ncboot32.exe supports HSSB multi–connection. The CNCs connected by HSSB are managed as nodes. The boot, IPL, and system alarm screens are displayed in windows that are opened independently for each node.

Supplementary 2: Termination method

Normally, Ncboot32.exe need not be terminated. However, to terminate Ncboot32.exe, right–click the icon in the system tray, and click End in the popup menu. When the Ncboot32.exe window is open, End cannot be selected.

NOTE
When the CNC is connected to the PC over Ethernet, use the standard LCD/MDI for the maintenance of the CNC.

F.2 CHANGING START SEQUENCES

With the rotary switch on the HSSB board on the CNC side (when the CNC does not have the PC function) or on the motherboard of the CNC (when the CNC has the PC function), the start sequence can be changed.

Position 0 can be selected as required to perform maintenance using the boot and IPL screens.

Position 0 (maintenance)

1. Wait until communication with the CNC is established.
2. Display the boot screen.
3. Display the IPL screen.
4. Display the CNC power–on screen.
5. Initialize the work area for the data window library.
6. Start a registered application program.
7. Perform monitoring for communication errors and CNC system alarms.

Position 1 (normal operation)

1. Wait until communication with the CNC is established.
2. Initialize the work area for the data window library.
3. Start a registered application program.
4. Perform monitoring for communication errors and CNC system alarms.

Position 2 (asynchronous start)

1. The CNC starts without waiting for communication to be established.
2. After communication is established, the PC performs initialization described below.
3. Initialize the work area for the data window library.
4. Start a registered application program.
5. Perform monitoring for communication errors and CNC system alarms.

- HSSB interface board of 16*i*/18*i*/21*i* of LCD–mounted type

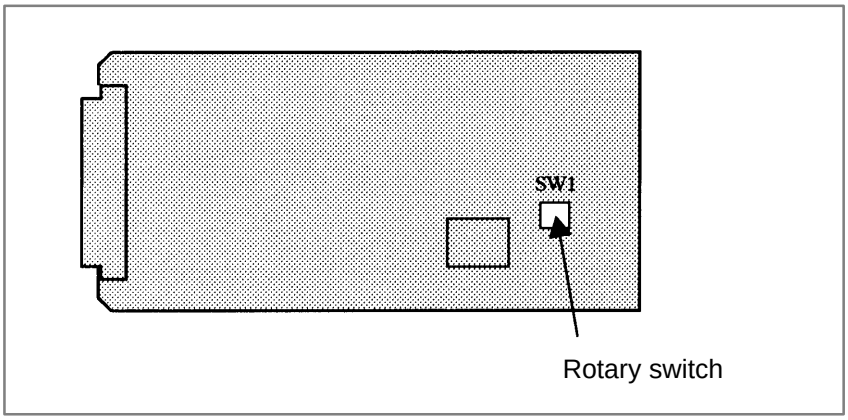

- HSSB interface board of 16*i*/18*i*/21*i*/160*i*/180*i*/210*i*/160*is*/180*is*/210*is* of stand–alone type

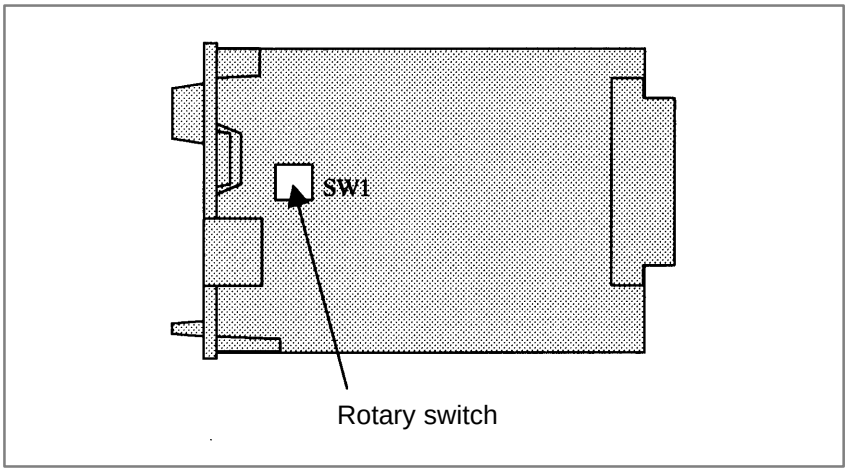

- Stand–alone type 160*is*/180*is*/210*is*

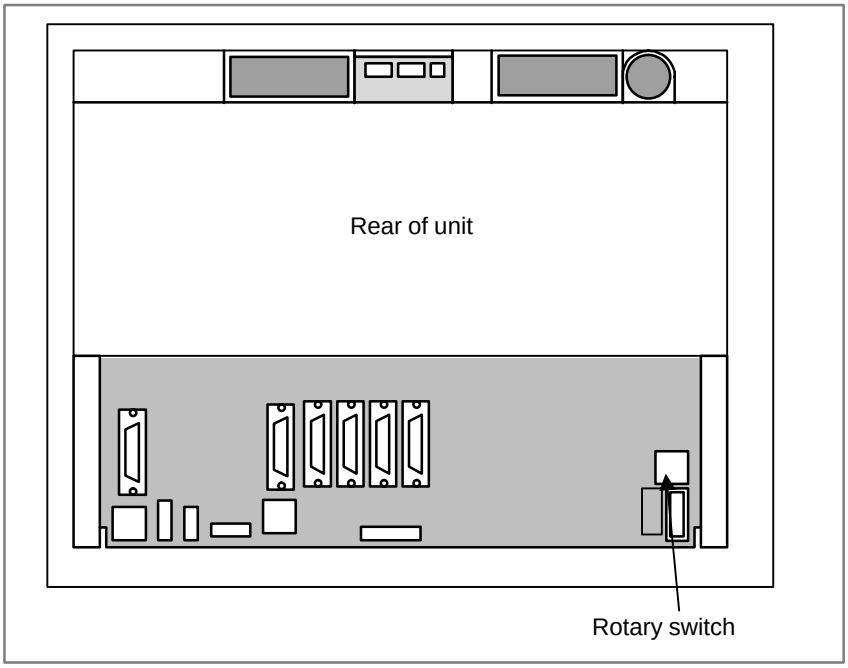

F.3 EXPLANATION OF SCREENS

NOTE
A mouse is required to display Ncboot32.exe screens.

F.3.1 Boot Screen

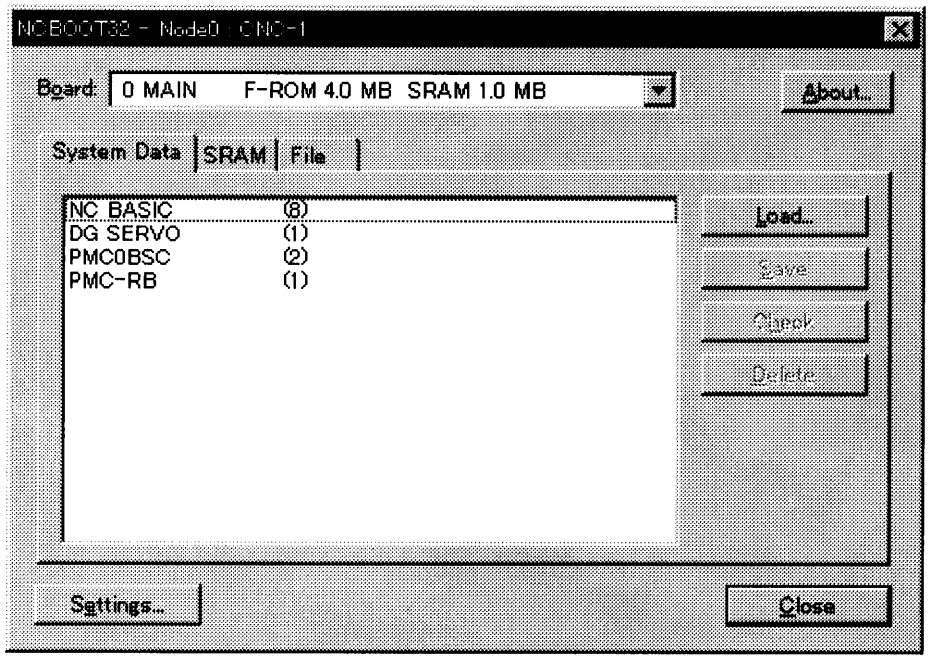

When the sub–board is provided, select a board in the [Board] list.

The area where the file is to be placed can be changed by using the [Setting...] button.

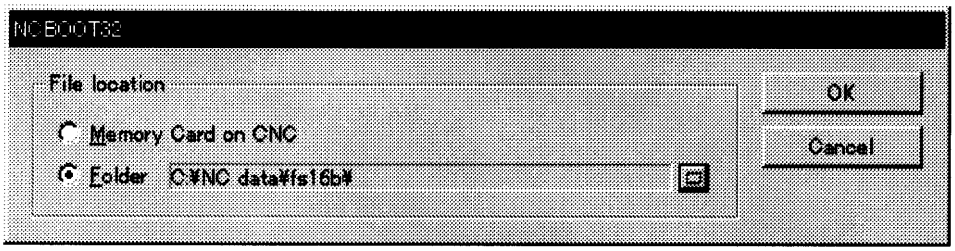

Select the memory card on the CNC or a PC folder. The file location may be changed at any time.

F.3.1.1 System data manipulation

The following screen is used for manipulating system data (including control software and ladder programs) on the NC.

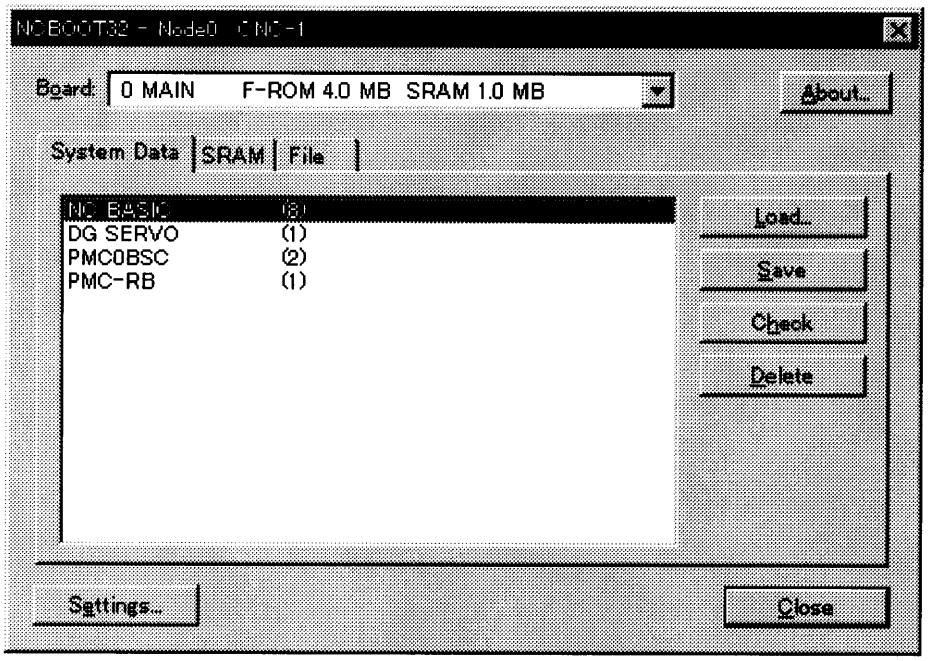

[Load...] opens the file selection screen. Specify a file to be loaded.

[Save] saves the selected NC system data in a file.

[Check] checks the selected NC system data.

[Delete] deletes the selected NC system data.

F.3.1.2 SRAM operation

This screen is used to store and restore NC SRAM data.

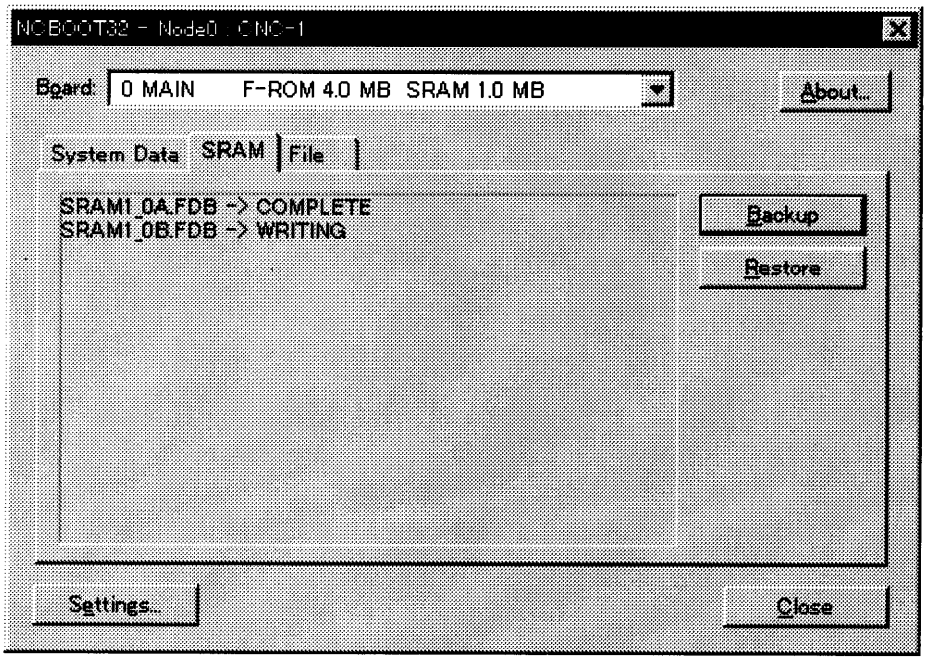

[Backup] stores SRAM data, and [Restore] restores SRAM data. In the center of the screen, the progress status is displayed. As with the NC, the backup file name is determined automatically from the SRAM size, and cannot be renamed.

F.3.1.3 File operation

The following screen is used for operating files on a memory card in the CNC or in a folder of the PC.

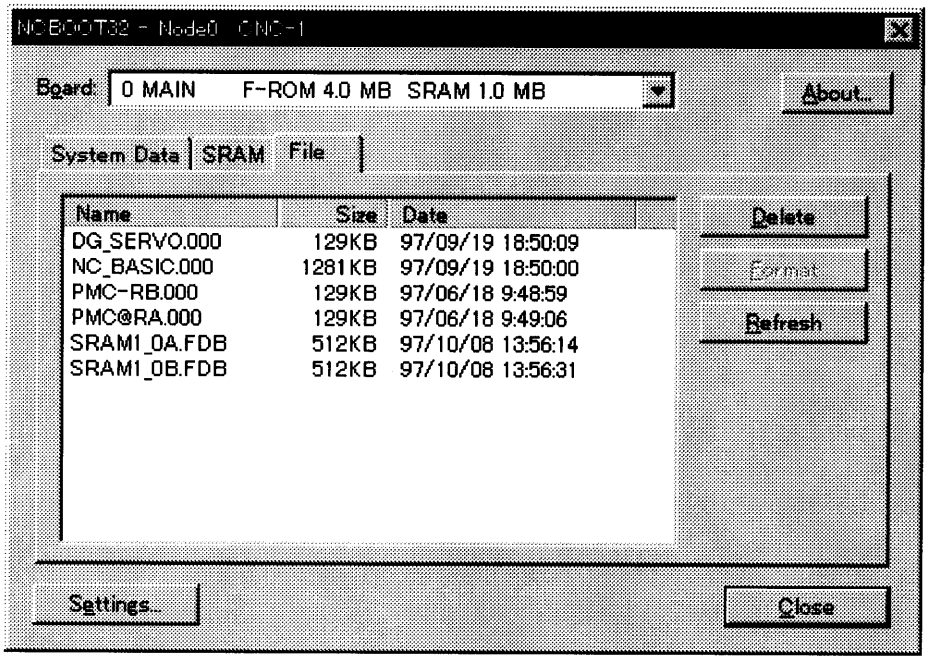

[Delete] deletes a selected file.

[Format] formats the memory card. This button is valid when the memory card is selected by [Setting...]

[Refresh] updates the file list to the latest state. After changing memory cards or floppy disks, click this button.

F.3.2
IPL Screen

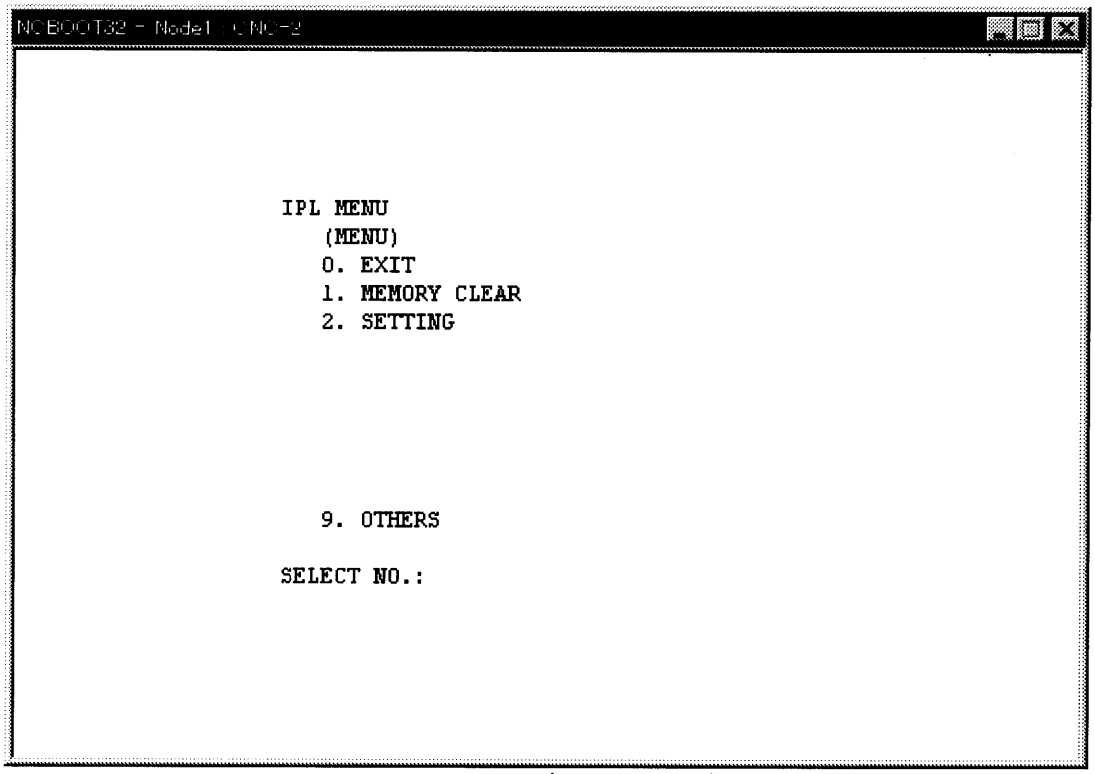

NOTE
The contents of the IPL screen vary depending on the CNC model. Follow the instructions displayed in the menu.

The CNC allows functions to be performed according to the key status set at power–on.

The open CNC does not allow this operation. On the IPL screen, however, equivalent functions can be executed.

For details of the menu on the IPL screen and supported functions, see the table given in Section F.3.2.1.

F.3.2.1 Functions on the IPL screen

Title on IPL screen			Corresponding MDI key operation at power–on (Operation with a standard CNC)
0. EXIT			
1. MEMORY CLEAR	0. CANCEL		
	1. ALL MEMORY	0. CANCEL 1. ALL 2. SUB 3. LOADER	 <DELETE> + <RESET> <CAM> + <2> <CAN> + <5>
	2. PARAMETER AND OFFSET	0. CANCEL 1. MAIN 2. SUB 3. LOADER	 <RESET> <RESET> + <2> <RESET> + <5>
	3. ALL PROGRAM	0. CANCEL 1. ALL 2. MAIN 3. SUB 4. LOADER	 <DELETE> <DELETE> + <1> <DELETE> + <2> <DELETE> + <5>
	4. ADDITIONAL SRAM	0. CANCEL 1. ALL 2. MAIN 3. SUB	 <O> + <DELETE> <O> + <1> <O> + <2>
	5. PMC	0. CANCEL	
		1. PARAMETER	0. CANCEL 1. CNC 2. LOADER	 <Z> + <O> <Z> + <5>
		2. PROGRAM	0. CANCEL 1. CNC 2. LOADER	 <Z> + <O> <Z> + <5>
	6. CAP–II		0. CANCEL 1. SUB MEMORY 2. CONVERSA-TIONNAL DATA	 <SP> <I>

Title on IPL screen			Corresponding MDI key operation at power–on (Operation with a standard CNC)
2. SETTING	0. CANCEL		
	1. IGNORE OVER TRAVEL ALARM	0. CANCEL 1. CNC 2. LOADER	 <CAN> + <P> <CAN> + <L>
	2. START WITHOUT LADDER	0. CANCEL 1. CNC SIDE 2. LOADER SIDE	 <CAN> + <Z> < . > + <5>
	3. CLANGUAGE EXECUTOR	0. CANCEL 1. MAKE VOID C–EXEC 2. BOOTS UP C–EXEC APL	 <M> + <0> <M> + <3>
9. OTHERS	0. CANCEL		
	1. P–CODE LOADER		<CAN> + <PROG>

F.4 OTHER SCREENS

F.4.1 CNC Alarm Screen

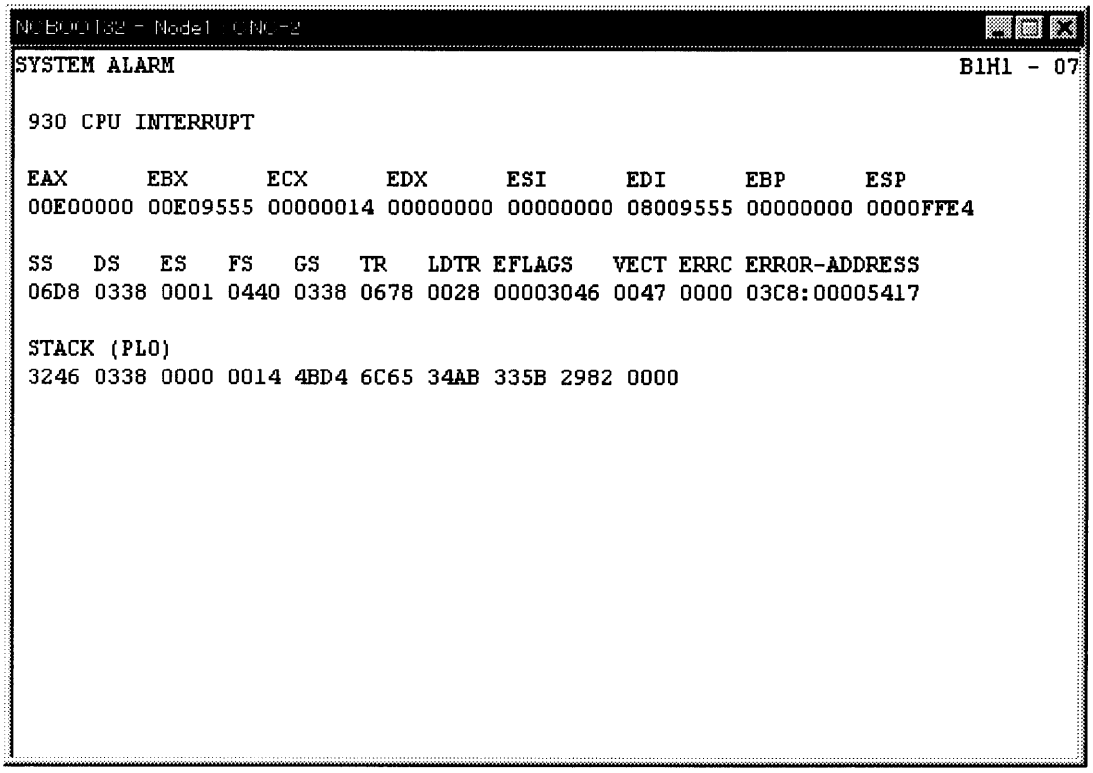

This screen appears when a system alarm is issued in the CNC. (The above screen is an example. The displayed information varies depending on the system alarm issued in the CNC.)

F.4.2 Status Screen (160*i*/180*i*/210*i*)

To open the status screen, double–click the icon in the system tray. Alternatively, in the menu popped up by right–clicking, click OPEN.

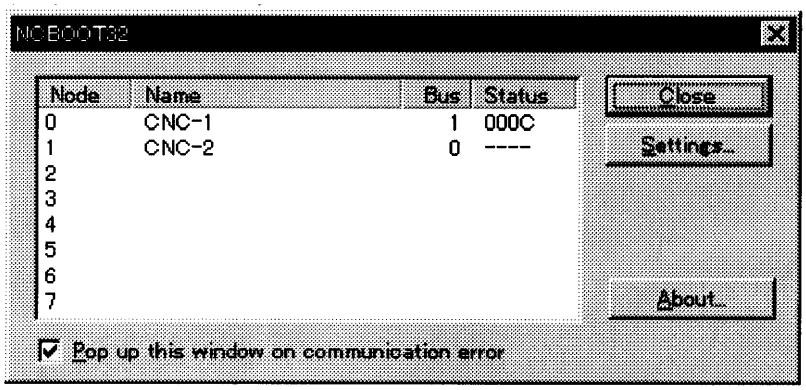

Node: Node number

Name: Node name. (Define the node name in advance by using the device manager in Windows 95/98 or the HSSB applet on the control panel in Windows NT.)

Bus: Hardware communication status (0: Communication error, 1: Communication established)

Status: Status (in hexadecimal)

Bit 1: Rotary switch position 1
Bit 2: End of boot processing
Bit 3: End of IPL processing
Bit 4: Rotary switch position 2
Bit 8: CNC system alarm

Pop up this window on communication error: By checking this item, this screen is opened automatically when a communication error occurs.

Clicking the [Close] button closes the screen.

Clicking the [Setting...] button opens the option setting screen.

Clicking the [About...] button opens the version information screen.

Status screen (160*is*/180*is*/210*is*)

The status screen appears when the system tray icon is double–clicked or NCBOOTis is restarted. This screen can be used to change the list of files to save, restore, or start as well as to check the execution result.

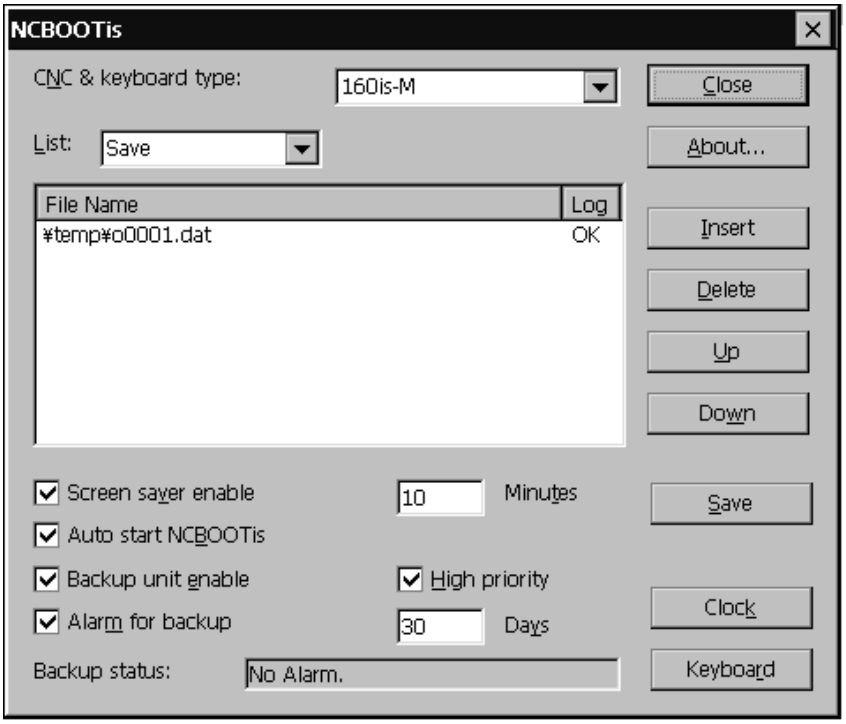

To close the screen, press the [Close] button.

[About...] When this button is pressed, the version information screen appears.

[CNC & keyboard type] This list is used to select the type of the CNC.

[List] This list is used to select the type of registered data to display or edit. [Save] is used to select the files to be saved during power–down. [Load] is used to select the files to be restored during power–up. [Start] is used to select the files to be started during power–up.

[Insert] This button is used to newly register data.

[Delete] This button is used to delete the registered data from the selected line.

[Up] This button is used to push forward the registration place of the selected line.

[Down] This button is used to push back the registration place of the selected line.

[Save] This button is used to save the registered files to the ”\Storage Card\Backup” folder. When automatic backup failed, restoration is performed with the files.

[Clock] This button is used to adjust the calendar and clock. It also sets the time difference (time zone) from Universal Coordinated Time.

[Screen saver enable] When this check box is checked, the screen saver is enabled.

[Auto start NCBOOTis] When this check box is checked, NCBOOTis automatically starts the next time.

[Backup unit Enable] When this check box is checked, the registry and files are automatically saved during power–down. After power–down, the special battery is used to supply the power during saving.

[High Priority] This check box is used to set the priority of automatic backup task. To save some files with an application, uncheck this check box.

[Alarm for backup] This check box is used to set the interval in days at which a message appears to prompt the user for manual saving when the system operates for an extended period of time.

F.4.3 Option Setting Screen (160*i*/180*i*/210*i* Only)

On the option setting screen, application programs can be registered. When a program uses the data window library, the program does not run unless it is started after the work area for the data window library is initialized. By registering such a program in Ncboot32.exe, it can be executed after the initialization of the work area for the data window library.

Application programs are registered for each node.

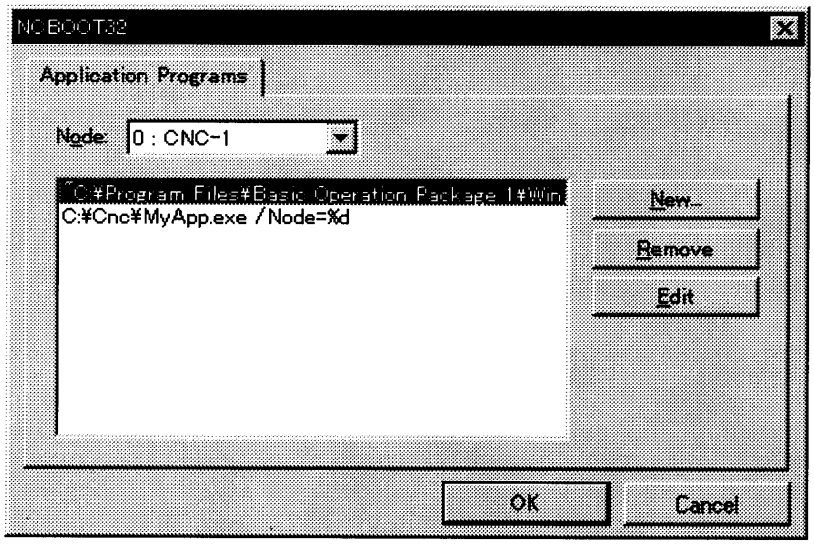

[Node] selects a node. In the list box in the center of the screen, the programs registered for the selected node are displayed.

[New...] registers a new program. When a blank character is included in the path, it is enclosed with double quotation marks.

[Remove] deletes a selected line.

[Edit] allows editing of a selected line. This button is used to edit arguments. The character string %d in the command line is replaced by a node number. To represent % itself, describe %%.

Example: To start basic operation package 1 after initialization of the work area for the data window library of the node, describe the following:

”C:\Program Files\Basic Operation Package 1\WinBOP32.exe” /Node=%d

NOTE
For the 160*i*s/180*i*s/210*i*s, the option setting screen is not provided.

G FSSB START–UP PROCEDURE/MATERIALS

G.1 OVERVIEW 966
G.2 SLAVE 967
G.3 AUTOMATIC SETTING 968
G.3.1 [Sample Setting 1] General Configuration (Semi–Closed Loop) 970
G.3.2 [Sample Setting 2] General Configuration (Closed Loop) 971
G.3.3 [Sample Setting 3] When the C–axis is a Cs Axis 973
G.3.4 [Sample Setting 4] Tandem Control Configuration 975
G.3.5 [Sample Setting 5] When the Simple Electronic Gear Box (EGB) Function is Used 977
G.4 MANUAL SETTING 2 979
G.5 MANUAL SETTING 1 986
G.6 ALARMS 987
G.7 ACTIONS FOR TROUBLE ENCOUNTERED AT START–UP TIME 992
G.8 EXAMPLES OF SETTINGS USING OTHER CONNECTIONS 994
G.8.1 Example 1: Learning Control 994
G.8.2 Example 2: When a 2–axis Amplifier is Shared by Two Paths 995
G.9 FSSB DATA DISPLAY 998
G.9.1 Amplifier Setting Screen 998
G.9.2 Axis Setting Screen 999
G.9.3 Amplifier Maintenance Screen 1000

G.1 OVERVIEW

With a system that uses the FSSB, the parameters below need to be set for axis setting. (Set other parameters as usually done.)

- No. 1023
- No. 1905
- No. 1910 to 1919
- No. 1936, 1937

For setting of these parameters, three methods are available.

1. Automatic setting

   By entering data including the relationship between axes and amplifiers on the FSSB setting screen, a calculation for axis setting is made automatically, and parameter Nos. 1023, 1905, 1910 through 1919, 1936, and 1937 are automatically set.

2. Manual setting 2

   Enter desired values directly in all of parameter Nos. 1023, 1905, 1910 through 1919, 1936, and 1937.

   Before setting the parameters, fully understand the functions of the parameters.

3. Manual setting 1(NOTE)

   Based on the setting of No. 1023, default axis setting is performed. Parameter Nos. 1905, 1910 through 1919, 1936, and 1937 need not be set. Automatic setting is not performed.

NOTE
With manual setting 1, usable functions are limited. So, when starting up the FSSB, use automatic setting or manual setting 2 whenever possible.

G.2 SLAVE

In a system using the FSSB, the CNC, servo amplifiers, and separate detector interface units are connected with each other via optical cables. These amplifiers and pulse modules are referred to as slaves. Assume that a 2–axis amplifier consists of two slaves, and a 3–axis amplifier consists of three slaves. Slave numbers (1, 2, 3, ..., 10) are assigned to the slaves in ascending order; a younger number is assigned to a slave that is closer to the CNC.

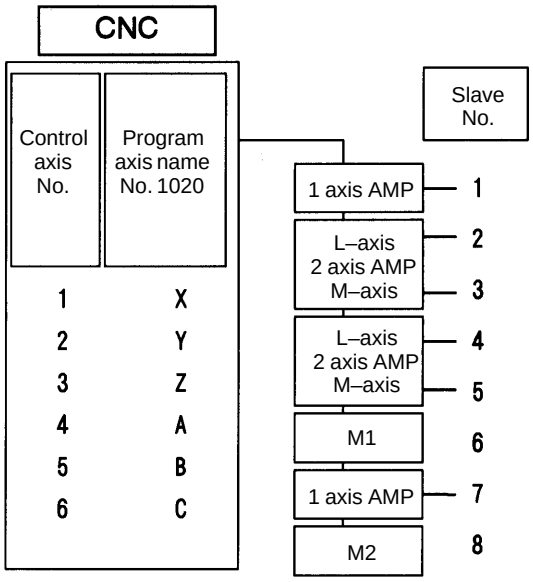

Note) M1/M2: Separate detector interface unit 1st/2nd

G.3 AUTOMATIC SETTING

When the following parameters are set, automatic setting can be performed using the FSSB setting screen:

Bit 0 of No. 1902 = 0
Bit 1 of No. 1902 = 0

For automatic setting on the FSSB setting screen, use the procedure below.

1 Set a servo axis number in No. 1023.

Be sure to match an axis number set in No. 1023 with the total number of axes of the servo amplifiers connected via optical cables.

2 On the servo initialization screen, initialize the servo parameters.

3 Turn off then on the power to the CNC.

4 Press function key SYSTEM .

5 Pressing the continuous menu key ▷ several times displays [FSSB].

6 Pressing soft key [FSSB] switches the screen display to the amplifier setting screen (or the FSSB setting screen selected previously), and displays the following soft keys:

```
[       ][       ][       ][       ][       ]
```

7 Press soft key [AMP].

8 On the amplifier setting screen, set a controlled axis number connected to each amplifier.

The amplifier setting screen lists the slaves in ascending order of slave numbers from top to bottom. So, when setting controlled axis numbers, consider which amplifier axis is to be connected to which CNC axis, sequentially, starting with the amplifier axis closest to the NC. On this setting screen, 0 and duplicate numbers cannot be entered.

```
  No.  AMP  SERIES  UNIT   CUR. [AXIS]  NAME
   1   A1-L    α    SVM    40AL   [ 1 ]   X
   2   A1-M    α    SVM     12A   [ 2 ]   Y
   3   A2-L    β    SVU     20A   [ 3 ]   Z
   4   A3-L    α    SVM     40A   [ 4 ]   A
   5   A3-M    α    SVM     80A   [ 5 ]   B
   7   A4-L    α    SVM    40AS   [ 6 ]   C


  NO.  EXTRA          PCB ID
   6    M1     A      0008 DETECTOR(4AXES)
   8    M2     A      0008 DETECTOR(4AXES)
>
MDI **** *** ***        13:11:56
[  AMP  ][  AXIS  ][ MAINT ][      ][ (OPRT) ]
```

9 Press soft key [SETING]. (This soft key appears when a value is entered.)

10 Press function key SYSTEM .

11 Pressing the continuous menu key ▷ several times displays [FSSB].

12 Pressing soft key [FSSB] switches the screen display to the amplifier setting screen, and displays the following soft keys:

```
[  AMP  ][  AXIS  ][ MAINT ][      ][ (OPRT) ]
```

13 Press soft key [AXIS].

14 On the axis setting screen, set information on each axis.

15 The axis setting screen lists the CNC axes in ascending order of axis numbers from top to bottom.
When any of the following is to be performed for each axis, the setting of this screen is required:

- Use of a separate detector
- Exclusive use of a DSP (CPU for servo control) by one axis (for use of a current loop period of 125 μs or learning control, for example)
- Use of a CS axis controlled axis
- Use of tandem control

```
(AXIS SETTING)
 AXIS  NAME   AMP    M1   M2  IDSP   Cs   TNDM
    1     X    A1-L   1    0     0    0      0
    2     Y    A1-M   0    1     0    0      0
    3     Z    A2-L   0    0     0    0      0
    4     A    A3-L   2    0     0    0      0
    5     B    A3-M   0    2     0    0      0
    6     C    A4-L   0    0     0    0      0




>
MDI **** *** ***         13:11:56
[  AMP  ][  AXIS  ][ MAINT ][      ][ (OPRT) ]
```

16 Press soft key [SETING]. (This soft key appears when a value is entered.)

This operation starts an automatic calculation, and parameter Nos. 1023, 1905, 1910 through 1919, 1936, and 1937 are automatically set.

Bit 1 of parameter No. 1902 is set to 1 to indicate that each of these parameters has been set. When the power is turned off then back on, axis settings are made according to each parameter.

- Notes on using the simple electronic gear box (EGB) function

  When using the simple electronic gear box (EGB) function, perform EGB axis setting (parameter No. 7771) before automatic setting using the FSSB setting screen. Without EGB axis setting, correct values cannot be set by automatic setting using the FSSB setting screen.

G.3.1
[Sample Setting 1]
General Configuration
(Semi–Closed Loop)

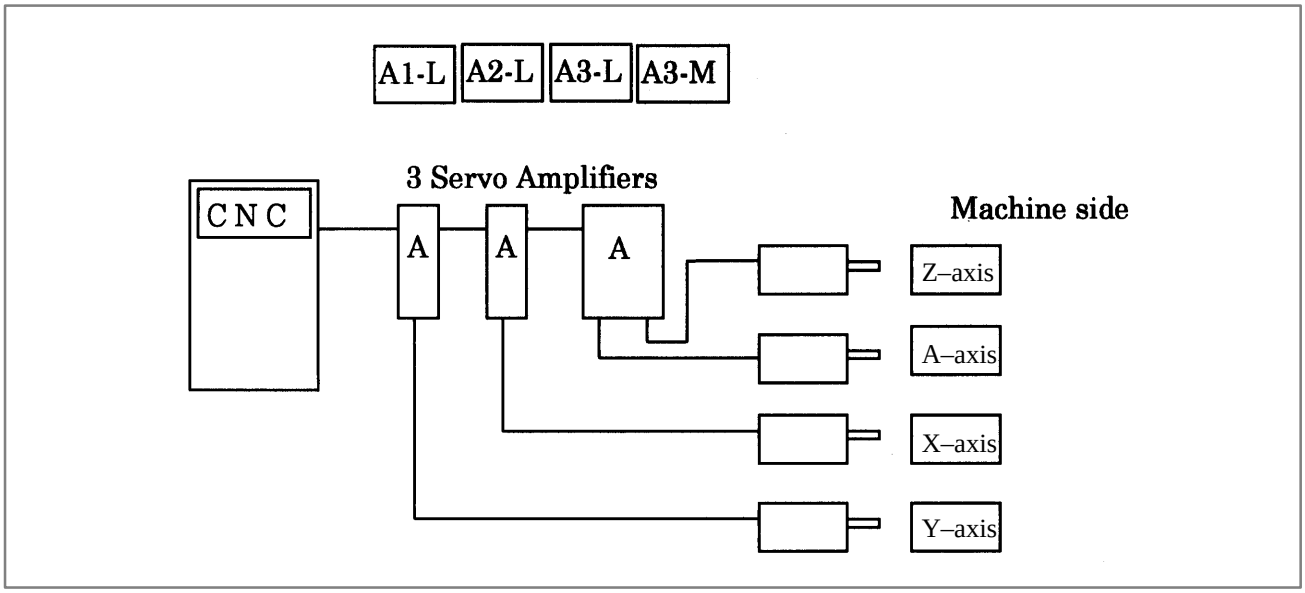

Step 1 Set the following with parameter No. 1023:
X : 1
Y : 2
Z : 3
A : 4

Step 2 Initialize the servo parameters for each axis.

Step 3 Turn on then off the power to the CNC.

Step 4 Enter the axis numbers on the amplifier setting screen.

```
(AMPLIFIER SETTING)
  No.  AMP  SERIES  UNIT   CUR. [AXIS]  NAME
   1   A1-L    α    SVM    40A  [ 2 ]   Y
   2   A2-L    α    SVM    40A  [ 1 ]   X
   3   A3-L    α    SVM    40A  [ 4 ]   A
   4   A3-M    α    SVM    80A  [ 3 ]   Z
  NO.  EXTRA  TYPE   PCB ID




>
MDI **** *** ***        13:11:56
[  AMP  ][  AXIS  ][ MAINT ][      ][ (OPRT) ]
```

Step 5 Press soft key [SETING]. (This soft key appears when a value is entered.)

Step 6 Press function key SYSTEM .

Step 7 Pressing the continuous menu key ▷ several times displays [FSSB].

Step 8 Pressing soft key [FSSB] switches the screen display to the amplifier setting screen, and displays the following soft keys:

```
[ AMP ][ AXIS ][ MAINT ][     ][ (OPRT) ]
```

Step 9 Press soft key [AXIS].

Step 10 Press soft key [(OPRT)] without entering any data, then press soft key [SETING].

Step 11 Turn off then on the power to the CNC. This completes the setting.

G.3.2 [Sample Setting 2] General Configuration (Closed Loop)

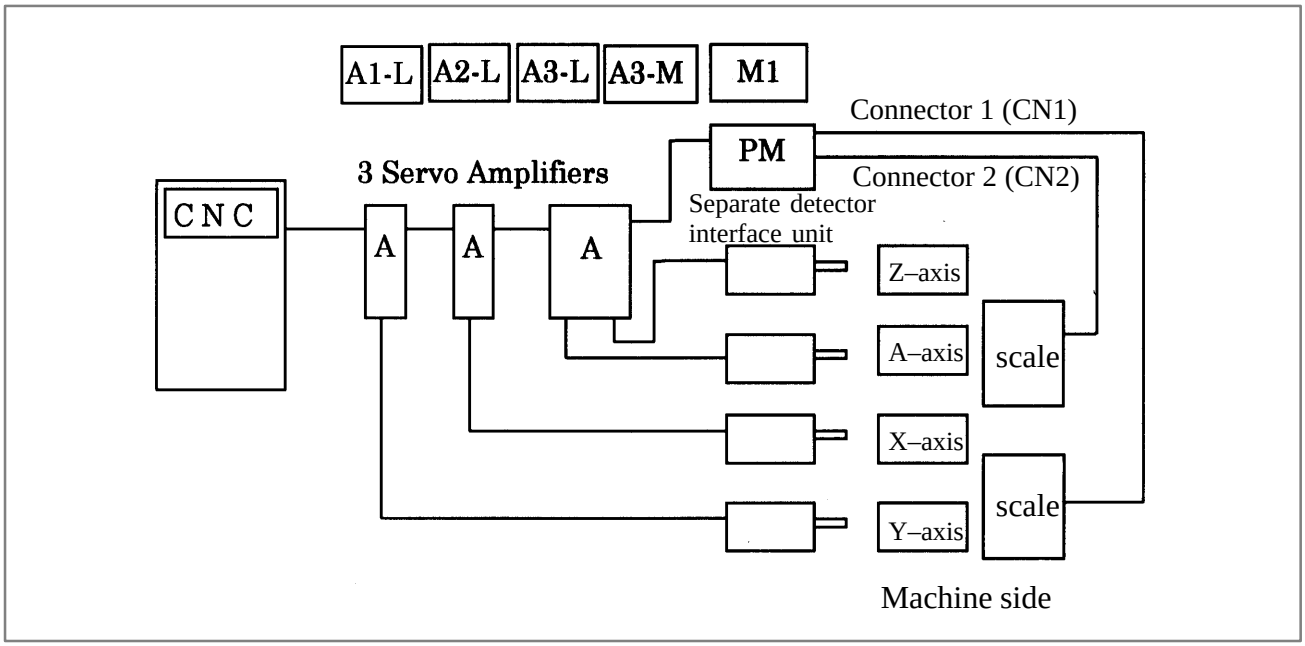

Step 1 Set the following with parameter No. 1023:

X : 1

Y : 2

Z : 3

A : 4

Step 2 Initialize the servo parameters for each axis.

Step 3 Turn on then off the power to the CNC.

Step 4 Enter the axis numbers on the amplifier setting screen.

```
(Amplifier setting)
  No.  AMP  SERIES  UNIT   CUR. [AXIS]  NAME
   1   A1-L    α    SVM    40A  [ 2 ]    Y
   2   A2-L    α    SVM    40A  [ 1 ]    X
   3   A3-L    α    SVM    40A  [ 4 ]    A
   4   A3-M    α    SVM    80A  [ 3 ]    Z
  NO.  EXTRA TYPE   PCB ID
   5    M1     A    0008 DETECTOR(4AXES)




>
MDI **** *** ***        13:11:56
[  AMP  ][  AXIS  ][ MAINT ][      ][ (OPRT) ]
```

Step 5 Press soft key [SETING]. (This soft key appears when a value is entered.)

Step 6 Press function key SYSTEM .

Step 7 Pressing the continuous menu key ▷ several times displays [FSSB].

Step 8 Pressing soft key [FSSB] switches the screen display to the amplifier setting screen, and displays the following soft keys:

```
[  AMP  ][  AXIS  ][ MAINT ][      ][ (OPRT) ]
```

Step 9 Press soft key [AXIS].

Step 10 Set the separate detector on the axis setting screen. (Separate detector interface unit: M1/M2)

```
(AXIS SETTING)
 AXIS  NAME   AMP    M1   M2  1DSP   Cs   TNDM
   1     X    A2-L   0    0    0     0     0
   2     Y    A1-L   1    0    0     0     0
   3     Z    A3-M   0    0    0     0     0
   4     A    A3-L   2    0    0     0     0









>
MDI **** *** ***        13:11:56
[  AMP  ][  AXIS  ][ MAINT ][      ][ (OPRT) ]
```

Step 11 Press soft key [SETING]. (This soft key is displayed when a value is entered.)

Step 12 Set bit 1 of parameter No. 1815 to 1 for the Y–axis and A–axis.

Step 13 Turn off then on the power to the CNC. This completes the setting.

G.3.3 [Sample Setting 3] When the C–Axis is a Cs Axis

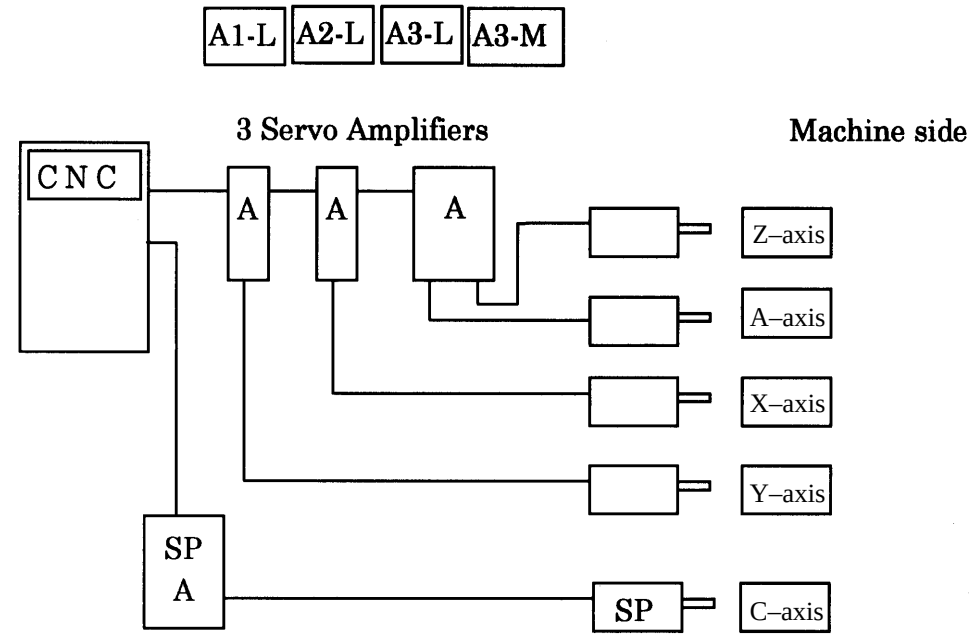

1 Spindle Amplifiers Cs contour control axis

Step 1 Set the following with parameter No. 1023:
X : 1
Z : 2
C : –1
Y : 3
A : 4

Step 2 Initialize the servo parameters for each axis.

Step 3 Initialize the spindle parameters for the spindle.

Step 4 Turn on then off the power to the CNC.

Step 5 Enter the axis numbers on the amplifier setting screen.

```
(AMPLIFIER SETTING)
  No.  AMP  SERIES  UNIT   CUR. [AXIS]  NAME
   1   A1-L    α    SVM    40A  [ 2 ]    Z
   2   A2-L    α    SVM    40A  [ 1 ]    X
   3   A3-L    α    SVM    40A  [ 4 ]    A
   4   A3-M    α    SVM    80A  [ 3 ]    Y
  NO.  EXTRA  TYPE   PCB ID




>
MDI **** *** ***        13:11:56
[  AMP  ][  AXIS  ][ MAINT ][      ][ (OPRT) ]
```

Step 6 Press soft key [SETING]. (This soft key appears when a value is entered.)

Step 7 Press function key SYSTEM .

Step 8 Pressing the continuous menu key ▷ several times displays [FSSB].

Step 9 Pressing soft key [FSSB] switches the screen display to the amplifier setting screen, and displays the following soft keys:

```
[  AMP  ][  AXIS  ][ MAINT ][      ][ (OPRT) ]
```

Step 10 Press soft key [AXIS].

Step 11 Set the Cs contour axis on the axis setting screen. (Cs)

```
(AXIS SETTING)
 AXIS  NAME   AMP    M1   M2  1DSP   Cs   TNDM
   1     X    A2-L   0    0    0     0     0
   2     Z    A1-L   0    0    0     0     0
   3     C      -    0    0    0     1     0
   4     Y    A3-M   0    0    0     0     0
   5     A    A3-L   0    0    0     0     0




>
MDI **** *** ***        13:11:56
[  AMP  ][  AXIS  ][ MAINT ][      ][ (OPRT) ]
```

Step 12 Press soft key [SETING]. (This soft key appears when a value is entered.)

Step 13 Turn off then on the power to the CNC. This completes the setting.

G.3.4 [Sample Setting 4] Tandem Control Configuration

The following two pairs of axes are tandem axes:
[The X–axis is a master axis, and the A–axis is a slave axis.]
[The Y–axis is a master axis, and the B–axis is a slave axis.]

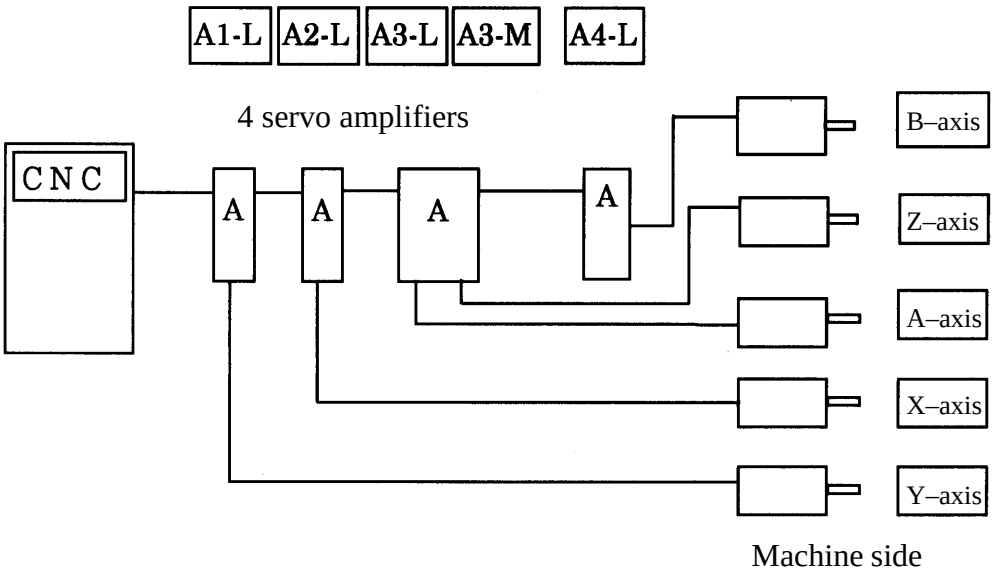

Step 1 Set the following with parameter No. 1023:
X : 1
Y : 3
Z : 5
A : 2
B : 4
No.1010=3
No.1817#6=1 (X axis, A axis, Y axis, B axis)
Tandem control option
Step 2 Initialize the servo parameters for each axis.
Step 3 Turn on then off the power to the CNC.

Step 4 Enter the axis numbers on the amplifier setting screen.

```
(AMPLIFIER SETTING)
  No.  AMP  SERIES  UNIT   CUR. [AXIS]  NAME
   1   A1-L    α    SVM    40A  [ 2 ]    Y
   2   A2-L    α    SVM    40A  [ 1 ]    X
   3   A3-L    α    SVM    40A  [ 4 ]    A
   4   A3-M    α    SVM    80A  [ 3 ]    Z
   5   A4-L    α    SVM    40A  [ 5 ]    B
  NO.  EXTRA  TYPE   PCB ID

>
MDI **** *** ***        13:11:56
[  AMP  ][  AXIS  ][ MAINT ][      ][ (OPRT) ]
```

Step 5 Press soft key [SETING]. (This soft key appears when a value is entered.)

Step 6 Press function key SYSTEM .

Step 7 Pressing the continuous menu key ▷ several times displays [FSSB].

Step 8 Pressing soft key [FSSB] switches the screen display to the amplifier setting screen, and displays the following soft keys:

```
[  AMP  ][  AXIS  ][ MAINT ][      ][ (OPRT) ]
```

Step 9 Press soft key [AXIS].

Step 10 Set the tandem axes on the axis setting screen. (TNDM)

```
(AXIS SETTING)
 AXIS  NAME   AMP    M1   M2  1DSP   Cs   TNDM
   1     X    A2-L   0    0    0     0     1
   2     Y    A1-L   0    0    0     0     3
   3     Z    A3-M   0    0    0     0     0
   4     A    A3-L   0    0    0     0     2
   5     B    A4-L   0    0    0     0     4

>
MDI **** *** ***        13:11:56
[  AMP  ][  AXIS  ][ MAINT ][      ][ (OPRT) ]
```

Step 11 Press soft key [SETING]. (This soft key appears when a value is entered.)

Step 12 Turn off then on the power to the CNC. This completes the setting.

G.3.5 [Sample Setting 5] When the Simple Electronic Gear Box (EGB) Function is Used

[EGB workpiece axis: A–axis, EGB dummy axis: B–axis (No. 7771 = 5)]

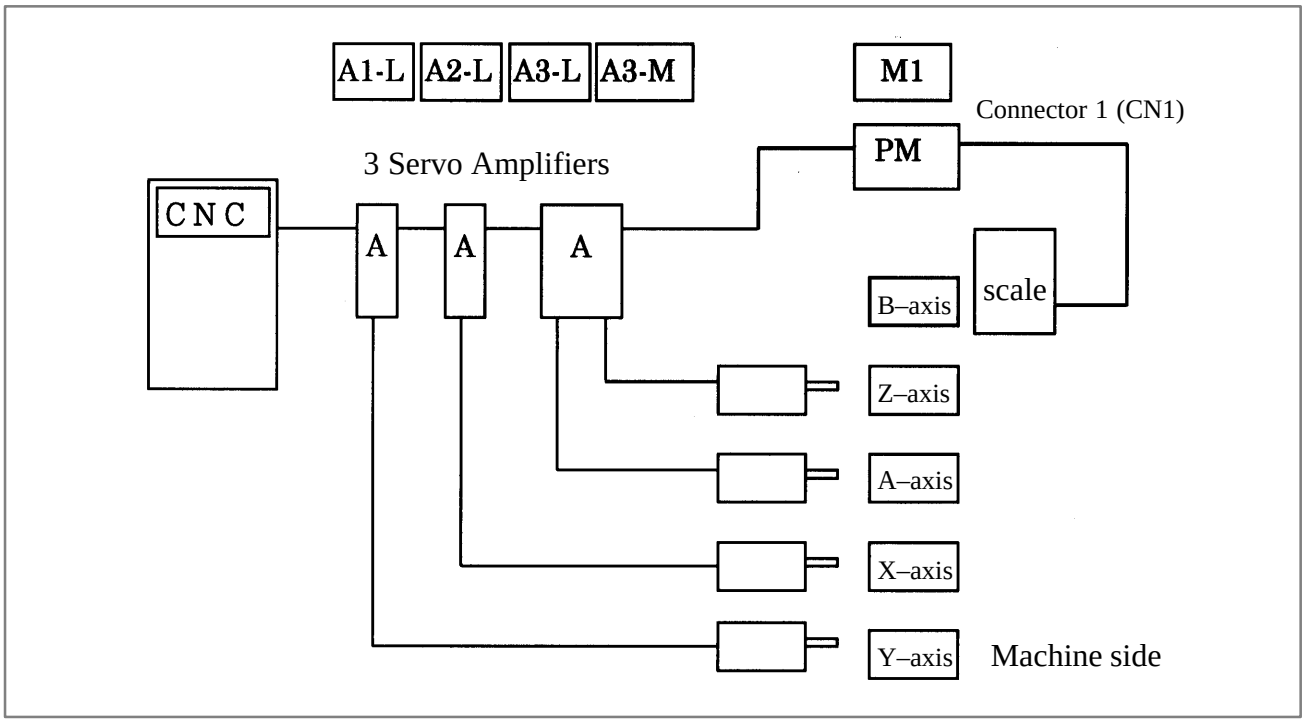

Step 1 Set the following with parameter No. 1023:
X : 1
Y : 2
Z : 5
A : 3
B : 4
No.7771=5
No.7772, No.7773
No.2011#0=1 (A axis, B axis)
Option parameter

Step 2 Initialize the servo parameters for each axis.

Step 3 Turn on then off the power to the CNC.

Step 4 Enter the axis numbers on the amplifier setting screen.

```
(AMPLIFIER SETTING)
  No.  AMP  SERIES  UNIT   CUR. [AXIS]  NAME
   1   A1-L    α    SVM    40A  [ 2 ]    Y
   2   A2-L    α    SVM    40A  [ 1 ]    X
   3   A3-L    α    SVM    40A  [ 4 ]    A
   4   A3-M    α    SVM    80A  [ 3 ]    Z
  NO.  EXTRA  TYPE   PCB ID
   5    M1     A    0008 DETECTOR(4AXES)




>
MDI **** *** ***        13:11:56
[  AMP  ][  AXIS  ][ MAINT ][      ][ (OPRT) ]
```

Step 5 Press soft key [SETING]. (This soft key appears when a value is entered.)

Step 6 Press function key SYSTEM .

Step 7 Pressing the continuous menu key ▷ several times displays [FSSB].

Step 8 Pressing soft key [FSSB] switches the screen display to the amplifier setting screen, and displays the following soft keys:

```
[  AMP  ][  AXIS  ][ MAINT ][      ][ (OPRT) ]
```

Step 9 Press soft key [AXIS].

Step 10 Set the EGB dummy axis on the axis setting screen. (M1)

```
(AXIS SETTING)
 AXIS  NAME   AMP    M1   M2  1DSP   Cs   TNDM
   1     X    A2-L   0    0    0     0      0
   2     Y    A1-L   0    0    0     0      0
   3     Z    A3-M   0    0    0     0      0
   4     A    A3-L   0    0    0     0      0
   5     B    --     1    0    0     0      0




>
MDI **** *** ***        13:11:56
[  AMP  ][  AXIS  ][ MAINT ][      ][ (OPRT) ]
```

Step 11 Press soft key [SETING]. (This soft key appears when a value is entered.)

Step 12 Turn off then on the power to the CNC. This completes the setting.

G.4 MANUAL SETTING 2

When the following parameters are set, each axis can be set manually:

No.1902#0=1
No.1902#1=0

When performing manual setting, set parameter Nos. 1023, 1905, 1910 through 1919, 1936, and 1937, fully understanding their functions.

	#7	#6	#5	#4	#3	#2	#1	#0
1902							ASE	FMD

[Data type] Bit

#0 (FMD) The FSSB setting mode is:

0 : Automatic setting mode. (When data including the relationship between axes and amplifiers is set on the FSSB setting screen, parameter Nos. 1023, 1905, 1910 through 1919, 1936, and 1937 are automatically set.)
1 : Manual setting 2 mode. (Parameter Nos. 1023, 1905, 1910 through 1919, 1936, and 1937 are set manually.)

#1 (ASE) When the FSSB setting mode is the automatic setting mode (when bit 0 of parameter No. 1902 = 0), automatic setting is:

0 : Not completed.
1 : Completed.
(This bit is automatically set to 1 when automatic setting is completed.)

	#7	#6	#5	#4	#3	#2	#1	#0
1905	PM2	PM1						FSL

[Data type] Bit axis

#0 (FSL) The type of interface between servo amplifiers and servo software is:

0 : Fast type.
1 : Slow type.

Two servo data transfer interface types are available: the fast type and slow type.

Set this bit so that the following conditions are satisfied:

- When a 1–axis amplifier is used, both of the fast and slow types can be used.
- When a 2–axis amplifier is used, the fast type must not be used for both axes. The slow type can be used for both axes.
- When a 3–axis amplifier is used, the first and second axes must satisfy the condition for a 2–axis amplifier, and the third axis must satisfy the condition for a one–axis amplifier.
- With an axis for which an odd number is set in parameter No. 1023, the fast type must be used. The slow type can also be used, however, for an EGB workpiece axis, learning–control axis, high–speed current loop axis, and high–speed interface axis.
- Only the slow type can be used with an axis for which an even number is set in parameter No. 1023. (Be sure to set this bit to 1).

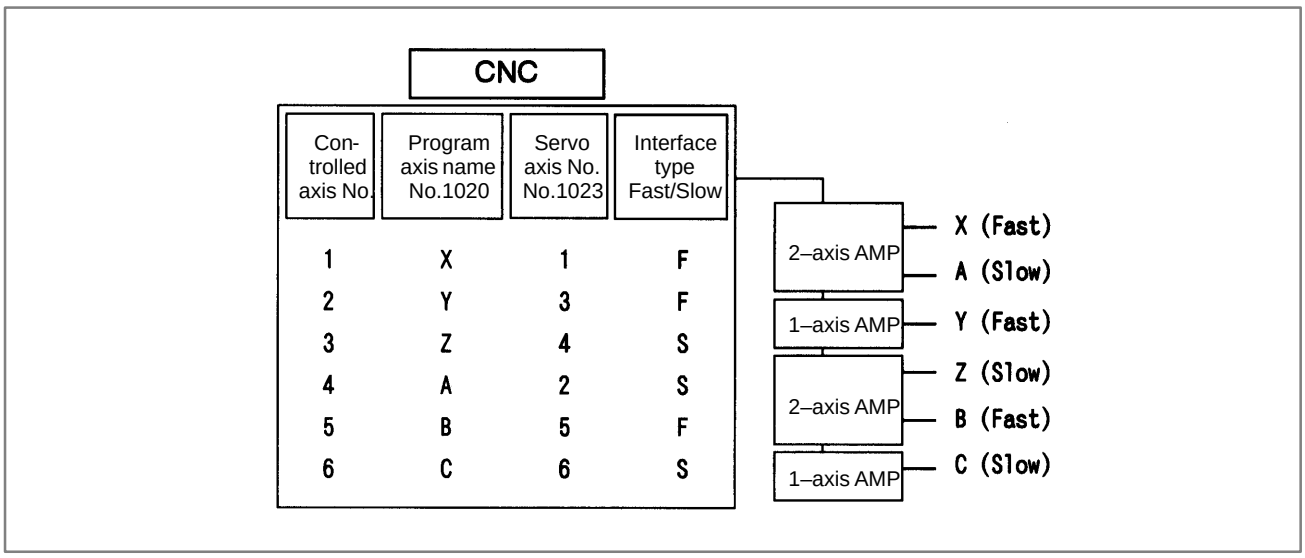

#6 (PM1) The first separate detector interface unit is:

0 : Not used.
1 : Used.

#7 (PM2) The second separate detector interface unit is:

0 : Not used.
1 : Used.

This parameter is automatically set by data input on the FSSB setting screen when the FSSB setting mode is the automatic setting mode (when bit 0 of parameter No. 1902 = 0). When the manual setting 2 mode is used (when bit 0 of parameter No. 1902 = 1), be sure to enter necessary data directly.

When a separate detector interface unit is used, connector numbers (parameter Nos. 1936 and 1937) need to be set.

PRM	1910	Address conversion table value for slave 1 (ATR)
PRM	1911	Address conversion table value for slave 2 (ATR)
PRM	1912	Address conversion table value for slave 3 (ATR)
PRM	1913	Address conversion table value for slave 4 (ATR)
PRM	1914	Address conversion table value for slave 5 (ATR)
PRM	1915	Address conversion table value for slave 6 (ATR)
PRM	1916	Address conversion table value for slave 7 (ATR)
PRM	1917	Address conversion table value for slave 8 (ATR)
PRM	1918	Address conversion table value for slave 9 (ATR)
PRM	1919	Address conversion table value for slave 10 (ATR)

[Data type] Byte

[Valid data range] 0 to 7, 16, 40, 48

Set an address conversion table value for each of slave 1 through 10.

The slave is the generic name of a servo amplifier or separate detector interface unit connected to the CNC via an FSSB optical cable. The numbers from 1 to 10 are assigned to the slaves in ascending order; a younger number is assigned to a slave that is closer to the CNC. A 2–axis amplifier consists of two slaves, and a 3–axis amplifier consists of three slaves. Set each of the parameters as described below according to which of the three cases is applicable: the slave is an amplifier, the slave is a separate detector interface unit, or there is no slave.

- When the slave is an amplifier:

  Set a value obtained by subtracting 1 from the setting of parameter No. 1023 for the axis to which the amplifier is assigned.

- When the slave is a separate detector interface unit:
  - For the first separate detector interface unit (closest to the CNC), set 16.
  - For the second separate detector interface unit (farthest from the CNC), set 48.

- When there is no slave:

  Set 40.

When using the simple electronic gear box (EGB) function, observe the note below.

NOTE

When using the simple electronic gear (EGB) function
An EGB axis (axis set in parameter No. 7771) actually requires no amplifier. However, make a setting, assuming that the EGB axis is connected to a dummy amplifier. That is, as the address conversion table value for a nonexistent slave, set a value obtained by subtracting 1 from the setting of parameter No. 1023 for the EGB axis instead of 40.

These parameters are automatically set by data input on the FSSB setting screen when the FSSB setting mode is the automatic setting mode (when bit 0 of parameter No. 1902 = 0). When the manual setting 2 mode is used (when bit 0 of parameter No. 1902 = 1), be sure to enter necessary data directly.

❍ Axis configuration and example of parameter setting

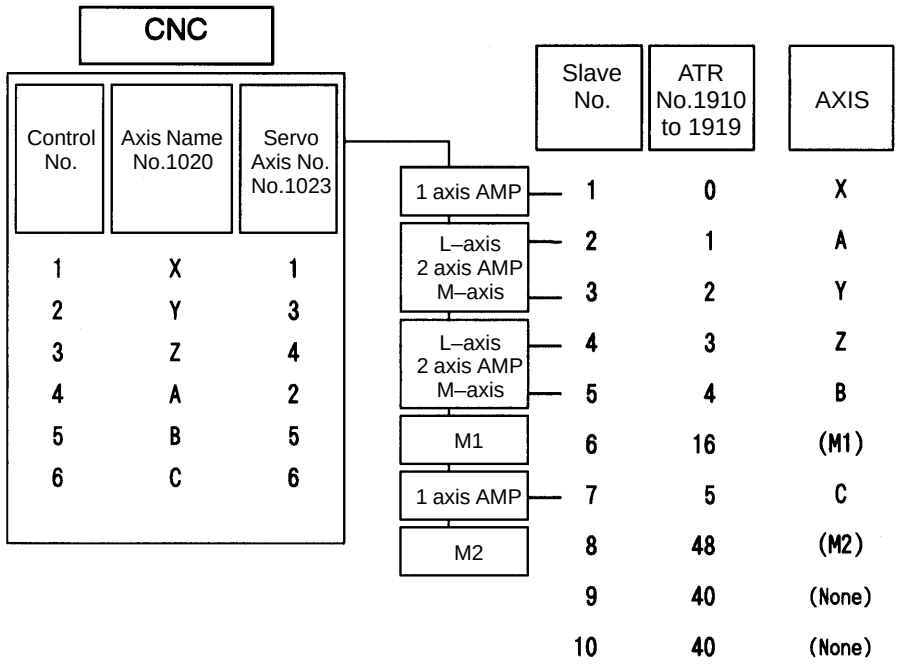

☆ M1/M2 : Separate detector interface unit 1st/2nd

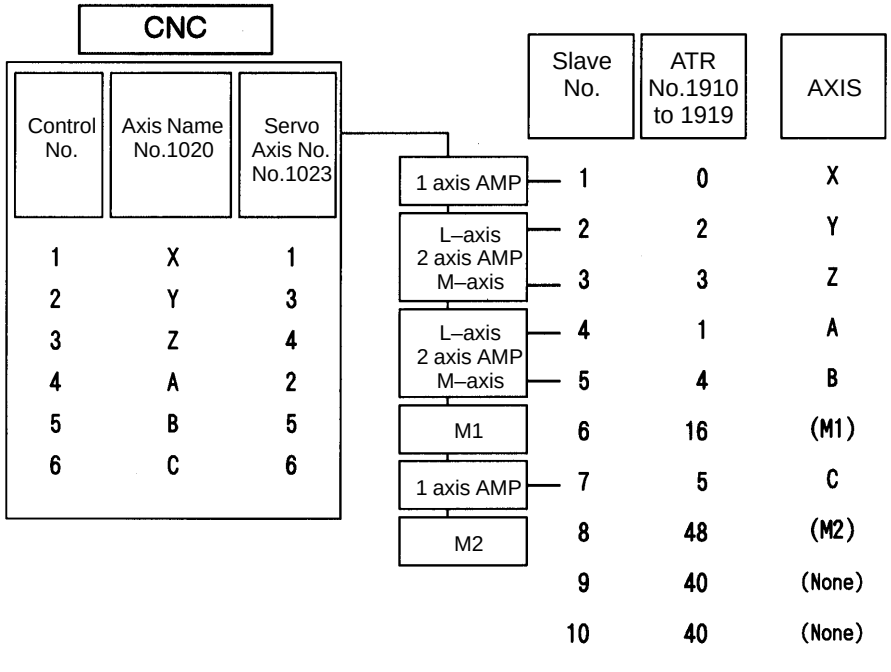

☆ M1/M2 : Separate detector interface unit 1st/2nd

❍ Axis configuration and example of parameter setting when the simple electronic gear box (EGB) function is used
(EGB workpiece axis: A–axis, EGB axis: B–axis (parameter No. 7771 = 5))

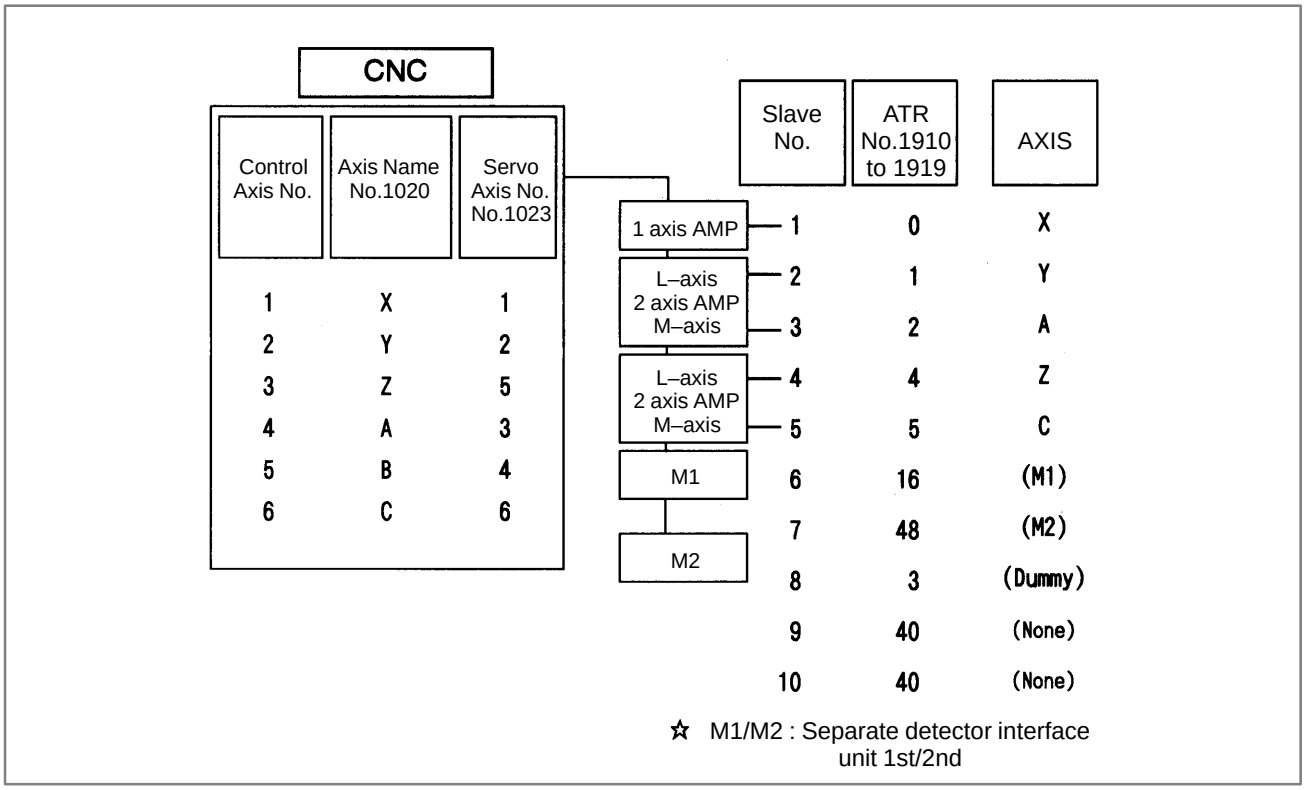

PRM	1936	Connector number for the first separate detector interface unit
PRM	1937	Connector number for the second separate detector interface unit

[Data type] Byte axis

[Valid data range] 0 to 7

When using a pulse module, set a value obtained by subtracting 1 from the pulse module connector number for each axis. That is, for connector numbers 1 to 8, set the values 0 to 7. Moreover, set bits 6 and 7 of parameter No. 1905. Set 0 for an axis for which no pulse module is used.

The user can freely determine which connector to use for which axis. Use connector numbers, starting with younger numbers. For example, connector number 4 cannot be used without using connector number 3.

Example:

Controlled axis	First connector number	Second connector number	No.1936	No.1937	No.1905 (#7,#6)
X	1	Not used	0	0	0,1
Y	Not used	2	0	1	1,0
Z	Not used	1	0	0	1,0
A	Not used	Not used	0	0	0,0
B	2	Not used	1	0	0,1
C	Not used	3	0	2	1,0

These parameters are automatically set by data input on the FSSB setting screen when the FSSB setting mode is the automatic setting mode (when bit 0 of parameter No. 1902 = 0). When the manual setting 2 mode is used (when bit 0 of parameter No. 1902 = 1), be sure to enter necessary data directly.

❍ Axis configuration and example of parameter setting in the manual setting 2 mode

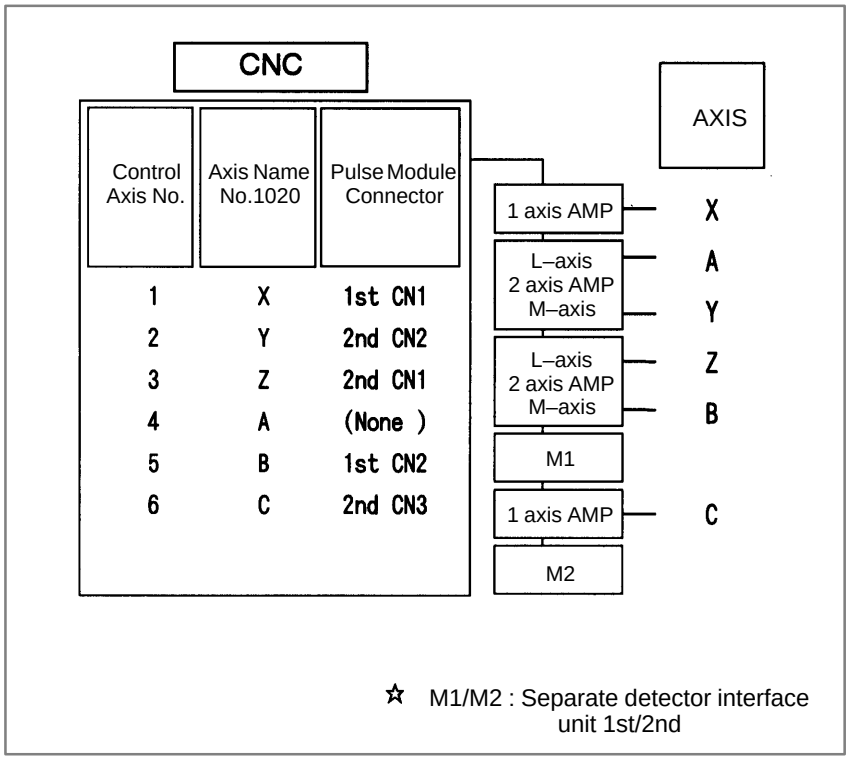

☆ M1/M2 : Separate detector interface unit 1st/2nd

No.	1902#0 FSBMD
	1

No.	1910	1911	1912	1913	1914	1915	1916	1917	1918	1919
	0	1	2	3	4	16	5	48	40	40

No.	1023	1905#0 FSBSL	1905#6 FSBM1	1905#7 FSBM2	1936	1937
X	1	0	1	0	0	0
Y	3	0	0	1	0	1
Z	4	1	0	1	0	0
A	2	1	0	0	0	0
B	5	0	1	0	1	0
C	6	1	0	1	0	2

G.5 MANUAL SETTING 1

When the following parameters are set, manual setting 1 is enabled:

Bit 0 of No. 1092 = 0
Bit 1 of No. 1902 = 0
Nos. 1910 through 1919 = 0 (all set to 0)

In manual setting 1, a setting is made at power–on so that the value set in parameter No. 1023 is assumed to be a slave number. That is, an axis for which the value of parameter No. 1023 is 1 is connected to the amplifier closest to the CNC. An axis for which the value of parameter No. 1023 is 2 is connected to the amplifier next closest to the CNC.

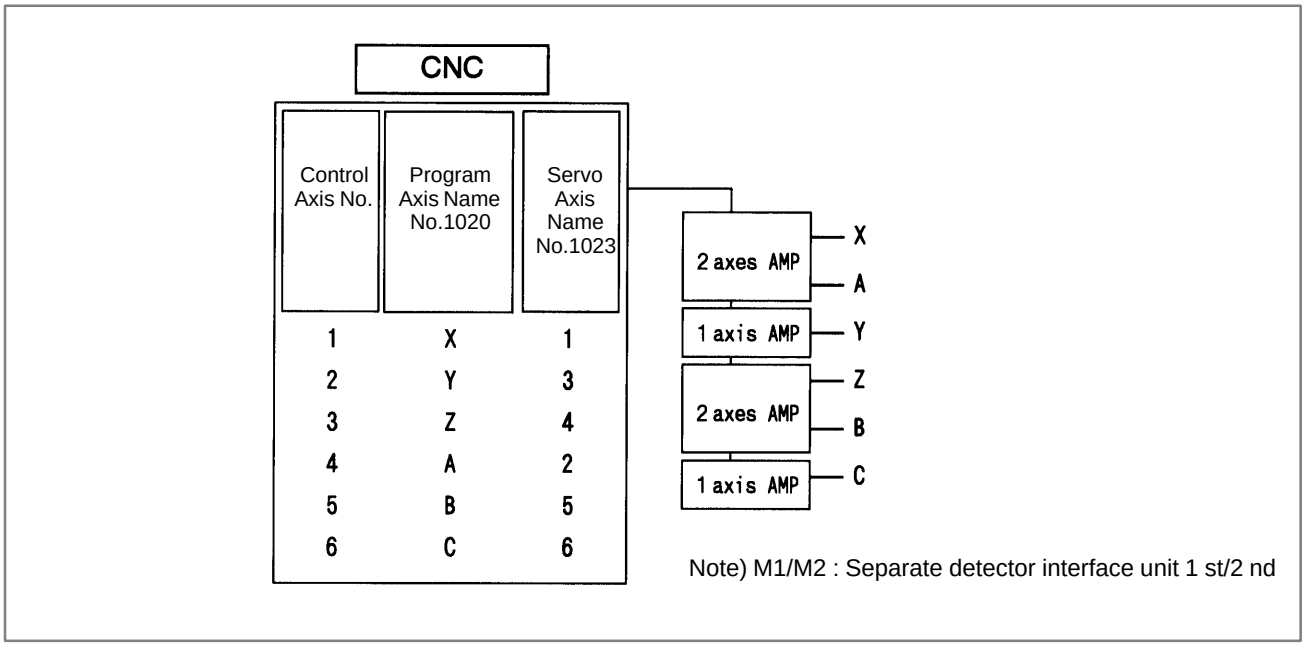

Note that some functions and settings cannot be used in manual setting 1 as described below.

- No separate detector interface unit can be used.
  This means that no separate position detector can be used.
- Set sequential numbers in parameter No. 1023.
  For example, 3 cannot be set for an axis without setting 2 for any axis.
- The following servo functions cannot be used:
  - ❑ Learning control
  - ❑ High–speed current loop
  - ❑ Simple electronic gear box (EGB)

G.6 ALARMS

Alarms related to pulse coders

NC alarm No.	Message	Description
360	n AXIS : ABNORMAL CHECKSUM (INT)	A checksum error occurred in the built–in pulse coder.
361	n AXIS : ABNORMAL PHASE DATA (INT)	A phase data error occurred in the built–in pulse coder.
362	n AXIS : ABNORMAL REV.DATA (INT)	A rotation speed count error occurred in the built–in pulse coder.
363	n AXIS : ABNORMAL CLOCK (INT)	A clock error occurred in the built–in pulse coder.
364	n AXIS : SOFT PHASE ALARM (INT)	The digital servo software detected invalid data in the built–in pulse coder.
365	n AXIS : BROKEN LED (INT)	An LED error occurred in the built–in pulse coder.
366	n AXIS : PULSE MISS (INT)	A pulse error occurred in the built–in pulse coder.
367	n AXIS : COUNT MISS (INT)	A count error occurred in the built–in pulse coder.
368	n AXIS : SERIAL DATA ER-ROR (INT)	Communication data from the built–in pulse coder cannot be received.
369	n AXIS : DATA TRANS. ER-ROR (INT)	A CRC or stop bit error occurred in the communication data being received from the built–in pulse coder.
380	n AXIS : BROKEN LED (EXT)	The LED of separate detector is erroneous.
381	n AXIS : ABNORMAL PHASE (EXT LIN)	A phase data error occurred in the separate linear scale.
382	n AXIS : COUNT MISS (EXT)	A pulse error occurred in the separate detector.
383	n AXIS : PULSE MISS (EXT)	A count error occurred in the separate detector.
384	n AXIS : SOFT PHASE ALARM (EXT)	The digital servo software detected invalid data in the separate detector.
385	n AXIS : SERIAL DATA ER-ROR (EXT)	Communication data from the separate detector cannot be received.
386	n AXIS : DATA TRANS. ER-ROR (EXT)	A CRC or stop bit error occurred in the communication data being received from the separate detector.

Alarms related to servo amplifiers

NC alarm No.	Message	Description
430	n AXIS : SV. MOTOR OVER-HEAT	A servo motor overheat occurred.
431	n AXIS : CNV. OVERLOAD	1) PSM: Overheat occurred. 2) β series SVU: Overheat occurred.
432	n AXIS : CNV. LOW VOLT CONTROL	1) PSM: Control power voltage has dropped. 2) PSMR: The control power supply voltage has dropped. 3) β series SVU: The control power supply voltage has dropped.
433	n AXIS : CNV. LOW VOLT DC LINK	1) PSM: The DC link voltage has dropped. 2) PSMR: The DC link voltage has dropped. 3) α series SVU: The DC link voltage has dropped. 4) β series SVU: The DC link voltage has dropped.
434	n AXIS : INV. LOW VOLT CONTROL	SVM: The control power supply voltage has dropped.
435	n AXIS : INV. LOW VOLT DC LINK	SVM: The DC link voltage has dropped.
436	n AXIS : SOFTTHERMAL (OVC)	The digital servo software detected the soft thermal state (OVC).
437	n AXIS : CNV. OVERCUR-RENT POWER	PSM: Overcurrent flowed into the input circuit.
438	n AXIS : INV. ABNORMAL CURRENT	1) SVM: The motor current is too high. 2) α series SVU: The motor current is too high. 3) β series SVU: The motor current is too high.
439	n AXIS : CNV. OVERVOLT POWER	1) PSM: The DC link voltage is too high. 2) PSMR: The DC link voltage is too high. 3) α series SVU: The C link voltage is too high. 4) β series SVU: The link voltage is too high.
440	n AXIS : CNV. EX DECEL-ERATION POW.	1) PSMR: The regenerative discharge amount is too large. 2) α series SVU: The regenerative discharge amount is too large. Alternatively, the regenerative discharge circuit is abnormal.
441	n AXIS : ABNORMAL CUR-RENT OFFSET	The digital servo software detected an abnormality in the motor current detection circuit.
442	n AXIS : CNV. CHARGE FAILURE	1) PSM: The spare discharge circuit of the DC link is abnormal. 2) PSMR: The spare discharge circuit of the DC link is abnormal.

NC alarm No.	Message	Description
443	n AXIS : CNV. COOLING FAN FAILURE	1) PSM: The internal stirring fan failed. 2) PSMR: The internal stirring fan failed. 3) β series SVU: The internal stirring fan failed.
444	n AXIS : INV. COOLING FAN FAILURE	SVM: The internal stirring fan failed.
445	n AXIS : SOFT DISCONNECT ALARM	The digital servo software detected a broken wire in the pulse coder.
446	n AXIS : HARD DISCONNECT ALARM	A broken wire in the built–in pulse coder was detected by hardware.
447	n AXIS : HARD DISCONNECT (EXT)	A broken wire in the separate detector was detected by hardware.
448	n AXIS : UNMATCHED FEEDBACK ALARM	The sign of feedback data from the built–in pulse coder differs from that of feedback data from the separate detector.
449	n AXIS : INV. IPM ALARM	1) SVM: IPM (intelligent power module) detected an alarm. 2) α series SVU: IPM (intelligent power module) detected an alarm.
453	n AXIS : SPC SOFT DISCONNECT ALARM	Software disconnection alarm of the α pulse coder. Turn off the power to the CNC, then remove and insert the pulse coder cable. If this alarm is issued again, replace the pulse coder.
456	ILLEGAL CURRENT LOOP	The current control cycle settings (parameter No. 2004, bit 0 of parameter No. 2003, and bit 0 of parameter No. 2013) are incorrect. Possible problems are as follows. – For the two axes whose servo axis numbers (settings of parameter No. 1023) are an odd number followed by an even number (a pair of axes 1 and 2 or axes 5 and 6, for example), a different current control cycle is set for each of the axes. – The requirements for slaves needed for the set current control cycle, including the number, type, and connection method of them, are not satisfied.
457	ILLEGAL HI HRV (250US)	Use of high–speed HRV is specified although the current control cycle is 200 μs.
458	CURRENT LOOP ERROR	The current control cycle setting does not match the actual current control cycle.
459	HI HRV SETTING ERROR	Of two axes having adjacent servo axis numbers (parameter No. 1023), odd number and even number, high–speed HRV control can be performed for one axis and not for the other.

Alarms related to servo amplifiers

NC alarm No.	Message	Description
460	n AXIS : FSSB DISCONNECT	FSSB communication was disconnected suddenly. The possible causes are as follows: 1) The FSSB communication cable is disconnected or broken. 2) The power to the amplifier dropped suddenly. 3) The amplifier issued a low–voltage alarm.
461	n AXIS : ILLEGAL AMP INTERFACE	Both axes of a 2–axis amplifier were assigned to the fast type interface.
462	n AXIS : SEND CNC DATA FAILED	Because of an FSSB communication error, a slave could not receive correct data.
463	n AXIS : SEND SLAVE DATA FAILED	Because of an FSSB communication error, the servo system could not receive correct data.
466	n AXIS : MOTOR/AMP COMBINATION	The maximum current value of the amplifier does not match the maximum current value of the motor.
467	n AXIS : ILLEGAL SETTING OF AXIS	The following servo functions are not enabled even when an axis using a DSP exclusively is set on the axis setting screen: 1) Learning control (bit 5 of parameter No. 2008 = 1) 2) High–speed current loop (bit 0 of parameter No. 2004 = 1) 3) High–speed interface axis (bit 4 of parameter No. 2005 = 1)
468	HI HRV SETTING ERROR(AMP)	Use of high–speed HRV is specified for a controlled axis of an amplifier which does not support high–speed HRV.

P/S alarms

NC alarm No.	Message	Description
5134	FSSB : OPEN READY TIME OUT	The FSSB did not become ready to open duringinitialization.
5135	FSSB : ERROR MODE	The FSSB entered an error mode.
5136	FSSB : NUMBER OF AMPS IS SMALL	The number of amplifiers recognized by the FSSB is insufficient, compared with the number of controlled axes.
5137	FSSB : CONFIGURATION ERROR	The FSSB detected a configuration error.
5138	FSSB : AXIS SETTING NOT COMPLETE	Axis setting has not been performed in automatic setting mode. Perform axis setting using the FSSB setting screen.
5139	FSSB : ERROR	The servo system could not be initialized normally. The cause may be an optical cable failure or incorrect connection with an amplifier and other modules.
5197	FSSB : OPEN TIME OUT	The FSSB did not open when the CNC had allowed the FSSB to open.
5198	FSSB : ID DATA NOT READ	The initial ID information for the amplifier cannot be read because of a failure in the temporaryassignment.
5311	FSSB : ILLEGAL CONNECTION	A connection related to FSSB is illegal.This alarm is issued when either of the following is found: 1 Two axes having adjacent servo axis numbers (parameter No. 1023), odd number and even number, are assigned to amplifiers to which different FSSB systems are connected. 2 The system does not satisfy the requirements for performing HRV control, and use of two pulse modules connected to different FSSB systems having different FSSB current control cycles is specified.

G.7 ACTIONS FOR TROUBLE ENCOUNTERED AT START–UP TIME

- MDI input is abnormal (each time data is entered, the power needs to be turned off).

  First, disconnect the optical cable of the NC, then turn off then on the power. Next, check the items below.

  (A) Check parameter No. 1902.

  Action: hen parameter
  No. 1902 = 00000000, set the following:
  No. 1905 = 00000000
  Nos. 1910 through 1919 = 0

  Action: hen parameter
  No. 1902 = 00000001 or 00000010, set the following:
  No. 1905 = Appropriate value
  Nos. 1910 through 1919 = Appropriate value

  (B) When bit 1 of parameter No. 1815 = 1, check parameter Nos. 1910 through 1919 to see if 16 or 48 is set.

  Action: If neither 16 nor 48 is set, set bit 1 of No. 1815 to 1.

  (C) Check if communication is open (the green LED is on).

  Action: If communication is not open, check the power supply for the amplifier and optical cable connection.

- The separate detector can be recognized, but feedback pulses from the separate detector are abnormal.

  (A) Check parameter No. 1902.

  Action: The setting of parameter
  No. 1902 = 00000000 is incorrect. When parameter
  No. 1902 = 00000001, set the following:
  No. 1905 = 01000000 or 10000000
  Nos. 1910 through 1919 = Appropriate value
  Nos. 1936 and 1937 = Appropriate value

  Action: When parameter No. 1902 = 00000010, set connector numbers for M0 and M1 in axis setting on the FSSB screen.

- In axis setting on the FSSB screen, connector numbers for M1 and M2 cannot be set.

  Action: Check the FSSB screen to see if separate detector interface unit IDs are read correctly. If pulse module IDs are not read correctly, check the separate detector interface unit connections.

- The settings on the FSSB screen are canceled when the power is turned off then back on.

  Action: After setting desired values, press soft key [SETING] on the amplifier setting screen and axis setting screen.

- P/S alarm 5138 “AXIS SETTING NOT COMPLETE” is issued.

  Action: Automatic setting on the FSSB screen is not terminated normally. Make settings correctly on the FSSB amplifier setting screen and axis setting screen, and press soft key [SETING] on both screens. At this time, be sure to make settings on the amplifier setting screen and the axis setting screen in this order.

Action: When automatic setting on the FSSB screen is not performed, set all of parameter Nos. 1902, 1905, 1910 through 1919, 1936, and 1937 to 0 before starting manual setting.

- The invalid amplifier/motor combination alarm (466) is issued.

  Action: Check if the maximum current value of the amplifier read on the ID screen matches the setting of parameter No. 2165. Recheck the amplifier/motor combination.

  Action: Initialize the servo parameters of each axis.

- When the power is turned off then back on after modifying parameter No. 1902, the system alarm (920) is issued.

  Action: Disconnect the optical cable of the CNC, then turn off then on the power.
  Set all of parameter Nos. 1902, 1905, 1910 through 1919, 1936, and 1937 to 0, then turn off then on the power, then make an FSSB setting all over again.

G.8 EXAMPLES OF SETTINGS USING OTHER CONNECTIONS

G.8.1 Example 1: Learning Control

- **Conceptual diagram of FSSB parameter setting for using learning control**

When learning control is used, one NC controlled axis uses one DSP (two axes of the servo axis card) exclusively.

(1) Set bit 0 of parameter No. 1902 to 1 to disable automatic setting.

(2) Assign two axes of the axis card to each of learning control axes X and C. (Parameter No. 1023 X = 1, C = 3)

(3) Assign the remaining controlled axes to the axis card (Parameter No. 1023 Z = 5, A = 6, B = 7)

(4) Set bit 0 of parameter No. 1905 to 1 for the A–axis, for which an even number is set in parameter No. 1023.

(5) When using a 2–axis amplifier, one of the two axes must always be set for the slow type. So, set bit 0 of parameter No. 1905 to 1.

(6) Set the attributes of parameter Nos. 1910 through 1914 to 0, 2, 4, 5, and 6, and set the attributes of the remaining parameters to 40 (for absence of a slave).

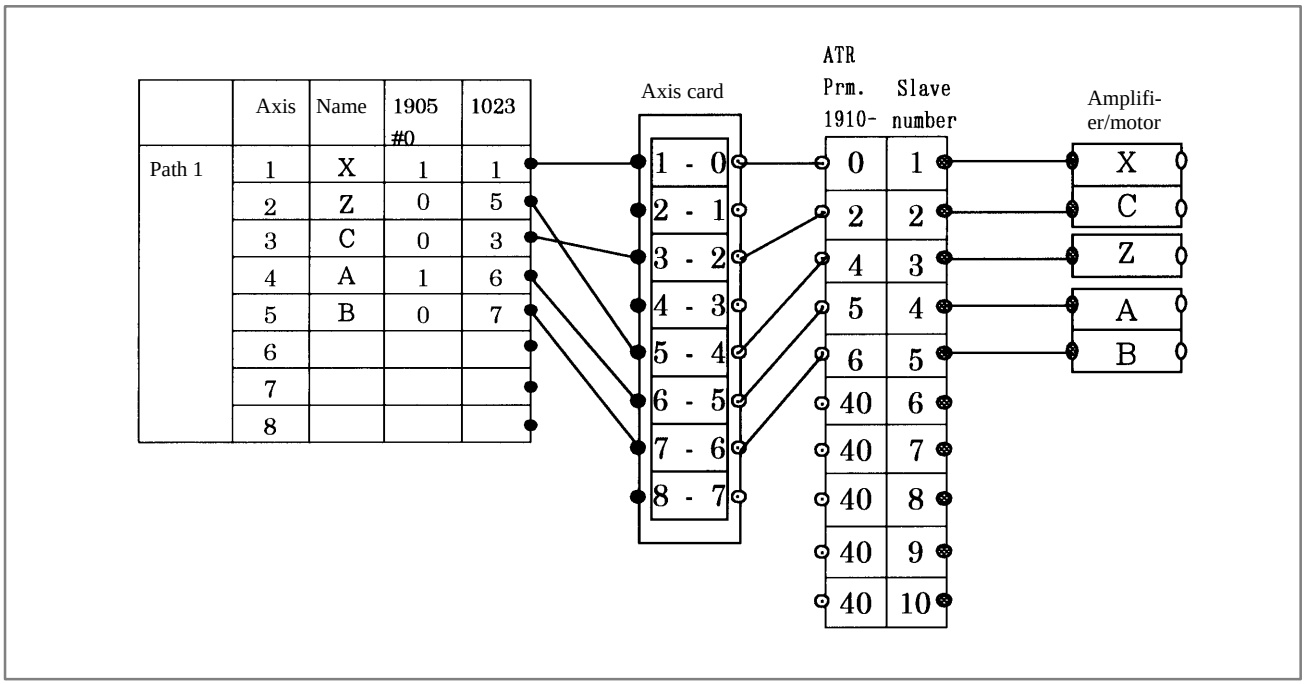

G.8.2 Example 2: When a 2–Axis Amplifier is Shared by Two Paths

Example: FSSB setting for the following:

Hardware connection

Mother board – 2–axis amplifier (LX/LZ) – 2–axis amplifier (LA/RA) – 2–axis amplifier (LC/RC)
Sub–board – 2–axis amplifier (RX/RZ) – 2–axis amplifier (LY/RY)

Controlled axis configuration

Mother board: LX, LZ, LC, LA, LY
Sub–board: RX, RZ, RC, RA, RY

Method of setting

When the servo system of another path is controlled as in this example, automatic FSSB setting is not possible. Manual setting needs to be used.

• FSSB setting procedure for controlling servo axes of another path in a multi–path system

When a motor connected to a path other than the local path is to be used in using a 2–axis amplifier, set the axis card number (DSP) of the remote path in parameter No. 1023.

Procedure for setting

(1) Set bit 0 of parameter No. 1902 to 1 to use the manual setting mode.

(2) By hardware connection, the slave number of each motor is determined. So, in parameter Nos. 1910 through 1919, set (slave number – 1) and 40 (for absence of a slave).

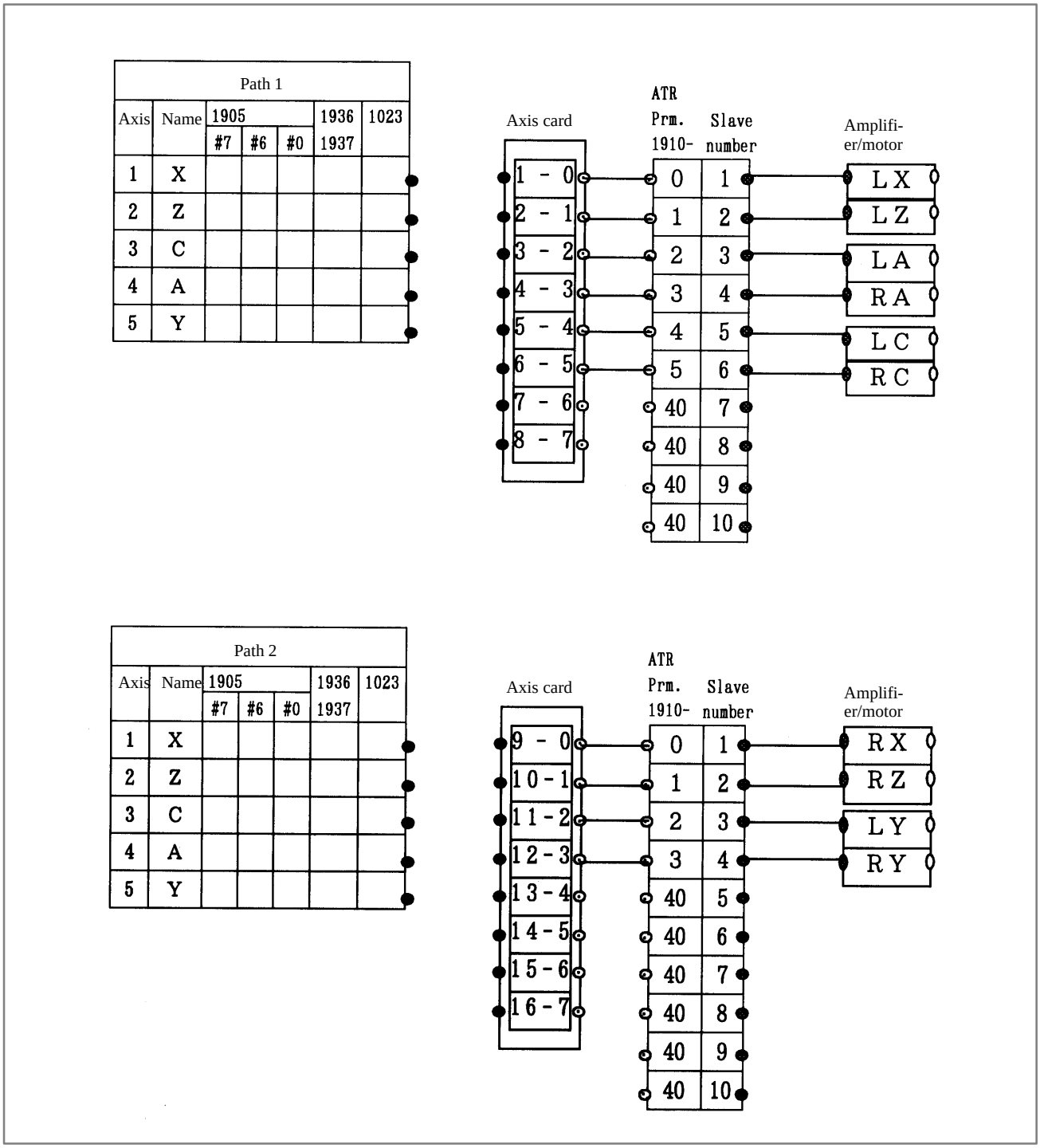

(3) Set an axis card number (DSP number) in parameter No. 1023 to connect an NC controlled axis with a motor.

(4) For an axis for which an even number is set in parameter No. 1023, set bit 0 of parameter No. 1905 to 1.

With the settings above, a servo motor connected to another path can be controlled.

When a separate detector interface unit is connected to use a separate scale, bits 7 and 6 of parameter No. 1905, and parameter Nos. 1936 and 1937 need also be set.

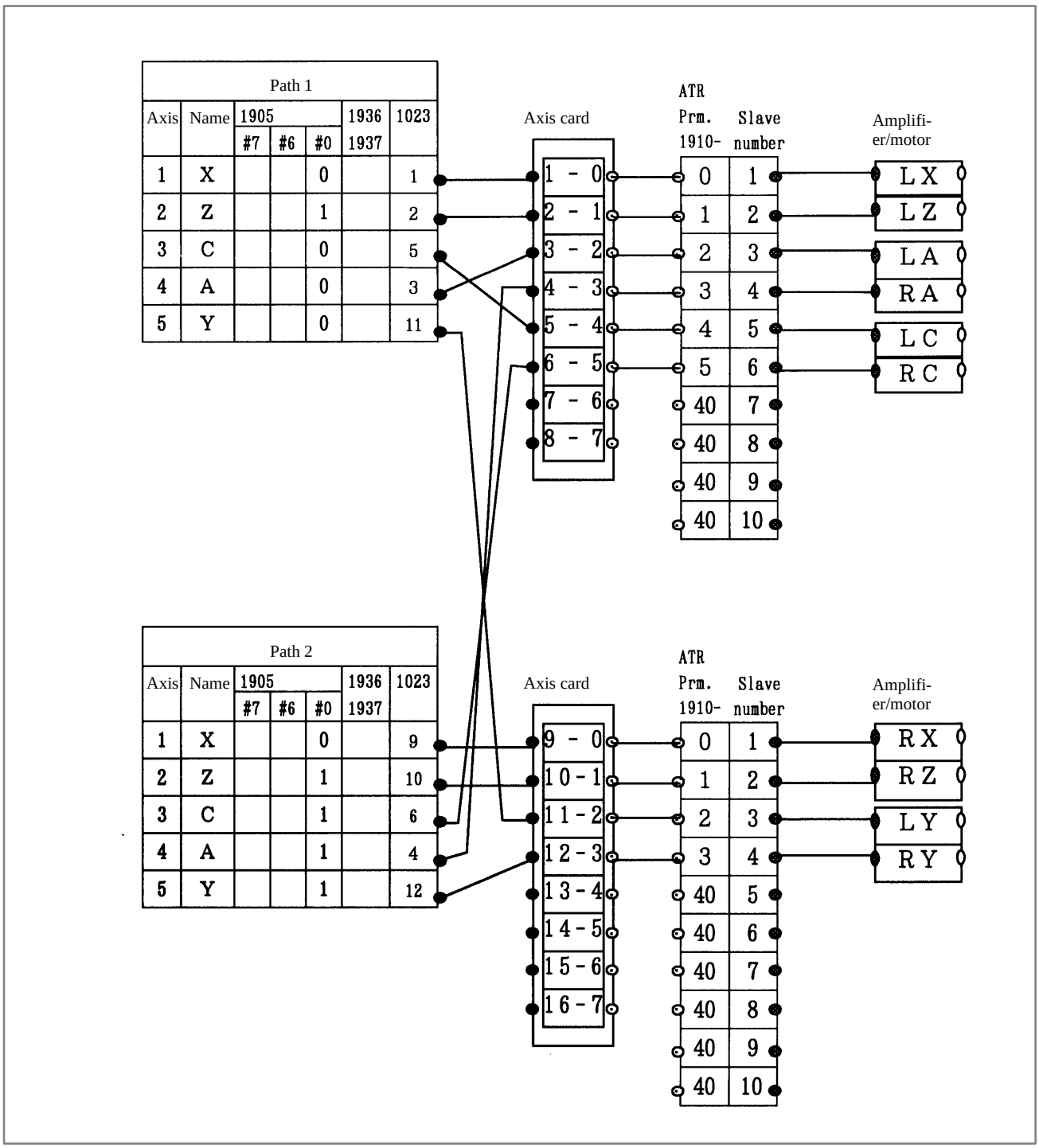
Path 1
Axis
Name
1905
#7
#6
#0
1936
1937
1023
1 X 0 1
2 Z 1 2
3 C 0 5
4 A 0 3
5 Y 0 11
Axis card
1 - 0
2 - 1
3 - 2
4 - 3
5 - 4
6 - 5
7 - 6
8 - 7
ATR
Prm.
1910-
Slave
number
0 1
1 2
2 3
3 4
4 5
5 6
40 7
40 8
40 9
40 10
Amplifi-
er/motor
LX
LZ
LA
RA
LC
RC
Path 2
1 X 0 9
2 Z 1 10
3 C 1 6
4 A 1 4
5 Y 1 12
9 - 0
10 - 1
11 - 2
12 - 3
13 - 4
14 - 5
15 - 6
16 - 7
RX
RZ
LY
RY

G.9 FSSB DATA DISPLAY

The FSSB setting screen displays FSSB–based amplifier and axis information, and allows amplifier and axis information to be set.

1 Press function key SYSTEM .

2 Pressing the continuous menu key ▷ several times displays [FSSB].

3 Pressing soft key [FSSB] switches the screen display to the amplifier setting screen (or the FSSB setting screen selected previously), and displays the following soft keys:

```
[  AMP  ][  AXIS  ][ MAINT ][      ][ (OPRT) ]
```

There are three types of FSSB setting screens: the amplifier setting screen, axis setting screen, and amplifier maintenance screen.

Pressing soft key [AMP] switches the screen display to the amplifier setting screen.

Pressing soft key [AXIS] switches the screen display to the axis setting screen.Pressing soft key [MAINT] switches the screen display to the amplifier maintenance screen.

G.9.1 Amplifier Setting Screen

The amplifier setting screen displays slave information divided into amplifier information and separate detector interface unit information.

```
(AMPLIFIER SETTING)      O1000 N00001
  NO.
    1   A1-L      α    SVM-HV  40AL   1     X
    2   A1-M      α       SVM   12A   2     Y
    3   A2-L      β       SVM   40A   3     Z
    4   A3-L      α       SVM   20A   4     A
    5   A3-M      α       SVM   40A   5     B
    7   A4-L      α       SVU  240A   6     C


  NO.       PCB ID
    6    M1       A    0000 DETECTOR(8AXES)
    8    M2       B    12AB
>_
MDI **** *** ***         13:11:56
[  AMP  ][  AXIS  ][ MAINT ][      ][ (OPRT) ]
```

The amplifier setting screen displays the items below.

- NO.: Slave number

  The serial numbers for to up to ten slaves (up to eight amplifiers and up to two pulse modules) connected via the FSSB are displayed sequentially. A younger number is assigned to a slave closer to the CNC.

- AMP: Amplifier type

  Amplifier type information starts with the character A, which stands for “amplifier.” The character A is followed by the ordinal number of an amplifier counted from the amplifier closest to the CNC, then is followed by a letter indicating which axis of the amplifier is used (L for the first axis, and M for the second axis).

- AXIS NO: Controlled axis number

  The controlled axis numbers set in parameter Nos. 1920 through 1929 are displayed.

  When a value outside the range 1 to the maximum number of controlled axes is set, 0 is displayed.
- NAME: Controlled axis name

  The axis name set in the parameter No. 1020 corresponding to a controlled axis number is displayed. When the controlled axis number is 0, – is displayed.
- As amplifier information, the following information items are displayed:
  - UNIT: Type of servo amplifier unit
  - SERIES: Servo amplifier series
  - CURRENT: Maximum current value
- As separate detector interface unit information, the information items below are displayed.
  - EXTRA
    The character M, which stands for “separate detector interface unit,” is followed by the ordinal number of a separate detector interface unit counted from the separate detector interface unit closest to the CNC.
  - TYPE
    The type of a separate detector interface unit is displayed by a letter.
  - PCB ID
    The ID of a separate detector interface unit is displayed using four digits in hexadecimal. For a separate detector module (8 axes), DETECTOR (8AXES) is displayed after the separate detector interface unit ID. For a separate detector module (4 axes), DETECTOR (4AXES) is displayed after the separate detector interface unit ID.

G.9.2 Axis Setting Screen

The axis setting screen displays axis information.

```
(AXIS SETTING)                O1000 N00001
                          M1  M2        Cs
   1      X   A1-L      0   0     0     0     1
   2      Y   A1-M      1   0     1     0     0
   3      Z   A2-L      0   0     0     1     0
   4      A   A3-L      0   0     0     0     2
   5      B   A3-M      0   0     0     0     0
   6      C   A4-L      0   0     0     0     0




>_
MDI **** *** ***          13:11:56
[  AMP  ][  AXIS  ][ MAINT ][      ][ (OPRT) ]
```

The axis setting screen displays the items below.

- AXIS NO: Controlled axis number

  The NC controlled axis numbers are displayed sequentially.
- NAME: Controlled axis name
- AMP: Type of amplifier connected to each axis
- M1: Connector number for separate detector interface unit 1

  The connector number for separate detector interface unit 1 set in parameter No. 1931 is displayed.
- M2: Connector number for separate detector interface unit 2

  The connector number for separate detector interface unit 2 set in parameter No. 1932 is displayed.
- 1DSP

  The value set in bit 0 (1DSP) of parameter No. 1904 is displayed. The value 1 is displayed for an axis (leaning control axis, high–speed current loop axis, high–speed interface axis) that exclusively uses a DSP.
- CS: Cs contour control axis

  The value set in parameter No. 1933 is displayed. The value 1 is displayed for a Cs contour control axis.
- TANDEM (M series only)

  The value set in parameter No. 1934 is displayed. For a master axis and slave axis used for tandem control, an odd number and a subsequent even number are displayed.

G.9.3 Amplifier Maintenance Screen

The amplifier maintenance screen displays servo amplifier maintenance information. There are two types of amplifier maintenance screens as shown below. The user can switch between the two screens with the page keys [↑] and [↓].

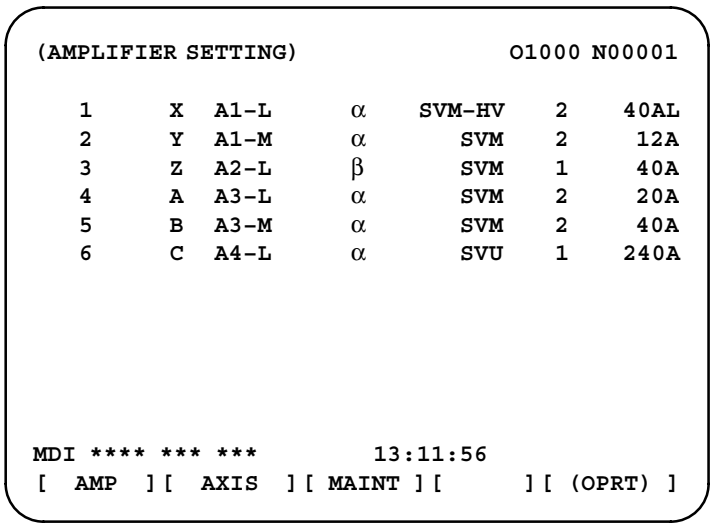

```
(AMPLIFIER MAINTENANCE)        O1000 N00001
                                    NO.
   1      X       01A     970123        01
   2      Y       01A     970123        01
   3      Z       01A     970123        01
   4      A       02B     970123        01
   5      B       02B     970123        01
   6      C       02B     970123        01





MDI **** *** ***        13:11:56
[  AMP  ][  AXIS  ][ MAINT ][      ][ (OPRT) ]
```

The amplifier maintenance screens display the following items:

- AXIS NO: Controlled axis number
- NAME: Controlled axis name
- AMP: Type of an amplifier connected to each axis
- SERIES: Series of a servo amplifier connected to each axis
- UNIT: Unit type of a servo amplifier connected to each axis
- NO. OF AXES: Maximum number of axes of an amplifier connected to each axis
- CURRENT: Maximum current value of an amplifier connected to each axis
- VERSION: Version of an amplifier unit connected to each axis
- TEST: Test date of an amplifier connected to each axis

  Example) 010123: January 23, 2001
- MAINTENANCE: Engineering change drawing number of an amplifier connected to each axis

H NOTATION OF MDI KEYS

i series CNC have two types of MDI keypads : English type and Symbolic type.
The table below shows correspondence between English keys and Symbolic keys.
This manual uses English type in the text.
Therefore when a user uses Symbolic type MDI keypads and encounters an English key in the text, please refer to the correspondence table shown below.

Name	English key	Symbolic key
CANCEL key	CAN	
POSITION key	POS	
PROGRAM key	PROG	
OFFSET/ SETTING key	OFFSET SETTING	
CUSTOM key	CUSTOM	
SYSTEM key	SYSTEM	
MESSAGE key	MESSAGE	
GRAPH key	GRAPH	
SHIFT key	SHIFT	
INPUT key	INPUT	

Name	English key	Symbolic key
ALTER key	ALTER	
INSERT key	INSERT	
DELETE key	DELETE	
PAGE UP key	↑ PAGE	
PAGE DOWN key	PAGE ↓	
HELP key	HELP	
RESET key	RESET	
CUSTOM/GRAPH key	CUSTOM GRAPH	

Index

≪Symbols≫

[Sample setting 1] general configuration (semi–closed loop), 970
[Sample setting 2] general configuration (closed loop), 971
[Sample setting 3] when the C–axis is a Cs axis, 973
[Sample setting 4] tandem control configuration, 975
[Sample setting 5] when the simple electronic gear box (FGB) function is used, 977
α*i* Servo Information Screen, 694
α*i* Servo Warning Interface, 692
α*i* Spindle Information Screen, 713

≪A≫

AC spindle (analog interface), 717
AC spindle (serial interface), 698, 699
Actions for trouble encountered at start–up time, 992
Address, 450
Adjusting reference position (dog method), 687
Alarm 300 (Request for Reference Position Return), 767
Alarm 401 (V Ready Off), 768
Alarm 404 (V Ready On), 772
Alarm 417 (Digital Servo System is Abnormal), 778
Alarm 462 (SEND CNC DATA FAILED) Alarm 463 (SEND SLAVE DATA FAILED), 775
Alarm 5134 (FSSB: Open Ready Time Out), 787
Alarm 5136 (FSSB: Number of Amps is Small), 791
Alarm 700 (Overheat: Control Unit), 779
Alarm 701 (Overheat: Fan Motor), 780
Alarm 704 (Spindle Speed Fluctuation Detection Alarm), 782
Alarm 749 (Serial Spindle Communication Error), 783
Alarm 750 (Spindle Serial Link Startup Failure), 784
Alarm 85 to 87 (Reader/Puncher Interface Alarm), 759
Alarm 90 (Reference Position Return is Abnormal), 765
Alarm 900 (ROM Parity), 794
Alarm 926 (FSSB Alarm), 805
Alarm 930 (CPU Interrupt), 811
Alarm 935 (SRAM ECC Error), 813
Alarm 950 (PMC System Alarm), 815
Alarm 951 (PMC Watchdog Alarm), 818
Alarm 972 (NMI Alarm on an Option Board), 819
Alarm 973 (NMI Alarm with an Unknown Cause), 820
Alarm 974 (F–BUS Error), 821
Alarm 975 (BUS Error), 824
Alarm 976 (Local BUS Error), 825
Alarm display, 29
Alarm history screen, 29
Alarm list, 835
Alarms, 987
Alarms (serial spindle), 900
Alarms 910 and 911 (Sram Parity), 796
Alarms 912 to 919 (Dram Parity), 799
Alarms 920 and 921 (Servo Alarms), 801
Amplifier maintenance screen, 1000
Amplifier setting screen, 998
Associated parameters, 691
Automatic Operation Cannot be Done, 740
Automatic setting, 968
Automatic setting of standard parameters, 710
Axis setting screen, 999

≪B≫

Backup Unit, 268, 398
Basic Unit, 221
Basic units, 324
Block diagram, 718
Boot Screen, 954
Boot slot configuration screen, 917
Boot system, 915

≪C≫

C board, serial communication board, 302
C Board, Serial Communication Board, Symbol CAP*i* T Board, and PMC–RE Board, 187
Cable Clamping and Shielding, 383
Calculation of S analog voltage and related parameters, 719
CE Card, 258
Changing start sequences, 952
Check items related to connection with a backbone, 660
Checking and changing of the connection host, 651
Checking communication, 662
Checking the setting of each parameter, 661
Cheek items related to connection with the hub, 660
Clearing alarm history, 29
Clearing Symbol CAP*i* T Memory, 421
Clearing Symbol CAP*i* T Data, 420
CNC Alarm Screen, 961
CNC Display Unit for *i*s series CNC, 334
CNC Display Unit with PC Functions and PANEL *i*, 331
CNC state display, 98
Color setting, 131
Color setting screen, 131
Communication parameter input method, 627
Communication Status, 495
Configuration display of software, 24
Configuration of PCBs, 25
Configuration of Printed Circuit Board Connectors and Cards, 175
Configuring a large network, 614, 621, 627

Confirming the parameters required for data output, 402
Connector and card configurations of printed circuit boards, 280
Contents displayed, 66
Contrast adjustment, 135
Corrective Action for Failures, 725
Correspondence between operation mode and parameters on spindle tuning screen, 707
Countermeasures Against Noise, 377
Cycle Start LED Signal has Turned Off, 748

≪D≫

Data input/output on the all IO screen, 422
Data input/output using a memory card, 437
Data sampling for storage type waveform diagnosis, 106
Data Server Board, 200
Deleting file name and files, 420
Deletion of external operator messages record, 36
Demounting a Card PCB, 355
Demounting a DIMM Module, 358
DeviceNet board, 311
DeviceNet interface board, 219
Digital servo, 669
Display and operation, 1
Display method, 25, 63, 112, 457, 702
Display on the 7–segment LED at power–on, 947
Display Unit, 221
Displaying diagnostic page, 66
Displaying servo tuning screen, 684
Distributed I/O Setting, 368
DNC1/Ethernet function, 603
Dogless reference position setting, 690
Dump/Restore of Symbol CAP*i* T Data, 419

≪E≫

EMB_ETH FACTOLINK log screen, 666
EMB_ETH FOCAS1/Ether log screen, 666
EMB_ETH FTP transfer log screen, 666
EMB_ETH MASTER CTRL log screen, 665
Embedded Ethernet and PCMCIA Ethernet, 600
Embedded Ethernet error message screen, 653
Embedded Ethernet function, 599
Embedded Ethernet maintenance screen, 655
Embedded Ethernet operations, 637
Enthernet board, 309
Environmental conditions outside cabinet, 376
Error codes (serial spindle), 912
Error messages, 665
Error messages and required actions, 933
Ethernet Board, 215
Example 1: learning control, 994
Example 2: when a 2–axis amplifier is shared by two paths, 995
Examples of settings using other connections, 994
Execution period of PMC, 454
Explanation of screens, 954
External operator messages record, 36

≪F≫

FACTOLINK function, 601, 637
FACTOLINK parameter setting screen, 608
FANUC two–byte character code table, 158
File operation, 957
FL–net board, 315
FOCAS1/Ethernet function, 601
FOCAS1/Ethernet parameter setting screen, 615
For lathe, 701
FS16*i*/18*i*/21*i* Motherboard, 175
FS160*is*/180*is*/210*is* Motherboard, 247
FSSB data display, 998
FSSB start–up procedure/materials, 965
FTP file transfer function, 605, 638
FTP file transfer parameter setting screen, 622
Function keys and soft keys, 2
Function number, 944
Functional differences between the embedded Ethernet function and the Ethernet function based on the option board, 605
Functions on the IPL screen, 959

≪G≫

General, 687, 690
General of interface, 448
Glossary for Ethernet, 667
Graphic of wave diagnosis data, 104
Graphic screen (M series), 22
Graphic screen (T series), 21
Grounding, 379

≪H≫

Handle Operation Cannot be Done, 735
Hardware Configuration, 246
Hardware configuration, 270, 939
Hardware Overview, 246
Hardware overview, 271
Heat Generated in Each Unit, 243
Heat generation of the units, 351

Help function, 63
Help screen, 20
Host file deletion, 641
Host file list display, 638
Host file search, 641
HSSB interface board, 208, 303

≪I≫

I/O, 227
I/O Link–II Board, 211
I/O link–II board, 308
ID Information Screen (αi Servo Information Screen/αi Spindle Information Screen), 28
In a connector panel I/O unit, data is input to an unexpected address, 757
In a connector panel I/O unit, no data is output to an expansion unit, 758
Initial setting servo parameters, 670
Input and output of data, 399
Input and output of each file (super CAP*i* M), 413
Input and output of each file (super CAP*i* T), 413
Input From and Output to I/O Devices Cannot be Performed Input/Output Cannot be Performed Properly, 755
Input/output of conversational data in a lump(super CAP*i* M), 411
Input/output of various types of data, 645
Input/output super CAP*i* data, 411
Inputting and outputting floppy files, 432
Inputting and outputting offset data, 430
Inputting and outputting parameters, 429
Inputting and outputting programs, 425
Inputting and outputting the operation history data, 56
Inputting CNC parameters, 406
Inputting custom macro variable values, 408
Inputting part programs, 409
Inputting pitch error compensation amount, 408
Inputting PMC parameters, 407
Inputting tool compensation amount, 409
Inputting/ outputting data, 402
Inputting/Outputting Symbol CAP*i* T, 417
Installing and Removing Optional Boards, 259
Installing and Removing the CE Card, 261
Installing and Removing the Mother Board, 259
Interface between CNC and PMC, 447
Inverter PCBs and Connector Units, 184
Investigating the Conditions Under which Failure Occurred, 725
IPL Screen, 958

≪J≫

Jog Operation Cannot be Done, 731

≪K≫

Kind of data in sub memory, 419

≪L≫

Layout of the 7–segment LED and switches, 943
LCD–Mounted Type *i* Series Hardware, 164
LCD–Mounted Type *i*s Series Hardware, 245
LCD/MDI unit, 329
LED display and maintenance of stand–alone type unit, 941
LED display during automatic operation, 945
LED display when a system alarm is issued, 946
LED display when the push switch is pressed, 945
Liquid Crystal Display (LCD), 363
List input/output signals, 499
List of addresses, 519
List of alarm codes (CNC), 836
List of alarms (PMC), 875
List of functions, 601
List of maintenance parts, 914
List of operations, 114
List of signals by each mode, 497
List of Units and Printed Circuit Boards, 221, 264
LOAD BASIC SYSTEM function, 931
Loader Control Board, 204

≪M≫

Main CPU Board of CNC Display Unit with PC Functions and PANEL *i*, 316
Main CPU Board of Series 16*i*/18*i*/21*i*/160*i*/180*i*/210*i*/160*is*/180*is*/210*is*, 280
Maintenance information input/output, 130
Maintenance information screen, 127
Maintenance of heat exchanger of heat pipe type, 359
Maintenance of open CNC (boot–up and IPL), 950
Manual setting 1, 986
Manual setting 2, 979
Matters common to both LCD–mounted type and stand–alone type *i* series (hardware), 353
MDI Unit, 222
MEMORY CARD FILE DELETE screen, 929
MEMORY CARD FORMAT function, 930
Memory card types (functions), 938
Memry card slot, 936
Message screen, 20
Method A of gear change for machining center, 701

Method B of gear change for machining center (PRM 3705#2=1), 701
Module configuration screen, 27
Mother Board of CNC Display Unit for *is* Series, 319
Mounting a Card PCB, 356
Mounting a DIMM Module, 358
Mounting and Demounting Card Pcbs, 354
Mounting and Demounting Dimm Modules, 357
Mounting and removing a mini–slot option board (except DeviceNet board), 337
Mounting and removing an option board, 335
Mounting and removing the back panel, 340
Mounting and removing the DeviceNet board, 338
Mounting and removing the main CPU board and a full–size option board, 335
Mounting the back panel, 340
Mounting the board, 336, 337, 338

≪N≫

NC program output, 643
NC status display, 945
No Manual Operation nor Automatic Operation Can be Executed, 727
Noise Suppressor, 382
Notation of MDI keys, 1002
Notes, 37, 111, 134, 147
Notes on using the FACTOLINK function for the first time, 607
Notes on using the FOCAS1/Ethernet function for the first time, 614
Notes on using the FTP file transfer function for the first time, 621
Notes on using the MDI unit, 386
Nothing is Displayed on the LCD when the Power is Turned On, 750

≪O≫

Offset/setting screen (M series), 15
Offset/setting screen (T series), 13
Online Setting, 494
Online setting screen, 494
Operating monitor, 112
Operation, 419, 690, 944
Operation Before Power–On, 944
Operation history, 38
Operation of each function, 948
Option Setting Screen (160*i*/180*i*/210*i* Only), 964
Other screens, 961
Other Units, 228
Other units, 330
Outline of spindle control, 699, 717
Outputting CNC parameters, 403
Outputting custom macro common variables, 431
Outputting custom macro variable values, 405
Outputting part program, 405
Outputting pitch error compensation amount, 404
Outputting PMC parameters, 404
Outputting tool compensation amount, 405
Outputting waveform diagnosis data (storage type), 108
Overview of Hardware, 166

≪P≫

Parameter, 37, 138
Parameter input/output, 145
Parameter setting, 38, 684
Parameter setting of the FACTOLINK function, 607
Parameter setting of the FOCAS1/Ethernet function, 614
Parameter setting of the FTP file transfer function, 621
Parameters, 113, 133, 611, 625
Periodic maintenance screens, 148
PMC PRM Screen, 489
PMC screen, 457
PMCDGN screen, 485
PMCLAD screen, 459
Position screen, 3
Power motion manager, 138
Printed Circuit Boards, 223
Printed circuit boards of control unit, 324
PROFIBUS Board, 213
PROFIBUS master board, 313
PROFIBUS slave board, 314
Program screen, 4, 6, 8, 9, 10, 11

≪R≫

Registered data input/output, 156
Removing the board, 335, 337, 338
Removing the panel, 340
Replaceing the Fuse, 396
Replacing a fan unit, 347
Replacing Battery, 232
Replacing Fan Motors, 236
Replacing Fuse on Control Unit, 231
Replacing Fuses on Various Units, 371
Replacing LCD Backlight, 239
Replacing Procedure of Mother Board, 395
Replacing the Battery, 266, 387, 397
Replacing the battery, 343
Replacing the Fan, 390
Replacing the Fan Motor, 266, 397

Replacing the Fuse, 389
Replacing the fuse of the control unit, 342
Replacing the fuse of the LCD unit, 348
Replacing the Fuse on the Units, 265
Replacing the LCD Back–Light, 267, 393, 398
Replacing the LCD backlight, 349
Replacing the Maintenance Parts of CNC Display Unit for *i*s Series CNC, 395
Replacing the Maintenance Parts of CNC Display Unit for PC Functions and PANEL *i*, 387
Replacing the Motherboard, 229
Replacing the Touch Panel Protection Sheet, 267, 394, 398
RISC Board, 197
RISC board, data server board, RISC + data server board, 293

≪S≫

Screen configuration and operating procedure, 918
Screen display, 29, 36, 43, 131, 139
Screen display and operation, 127
Screen display and setting, 148
Screen displayed immediately after power Is turned on, 23
Separation of Signal Lines, 377
Series 16*i*/160*i*/160*i*s, 271
Series 16*i*/160*i*s, 166
Series 18*i*/180*i*/180*i*s, 273
Series 18*i*/180*i*s, 168
Series 21*i*/210*i*/210*i*s, 274
Series 21*i*/210*i*s, 169
Servo Alarms, 826
Servo tuning screen, 684
Setting input/output–related parameters, 423
Setting module screen, 24
Setting of online connection, 494
Setting parameters, 100
Setting parameters for input/output, 400
Setting screen display and setting, 154
Setting the embedded Ethernet function, 607
Setting the input signal or output signal to be recorded in the operation history, 47
Seven–segment LED display, 945
Signal Ground (SG) Connection of Control Unit, 380
Slave, 967
Slot status display, 23
Soft key transition triggered by the function key [GRAPH], 21, 22
Soft key transition triggered by the function key [HELP], 20
Soft key transition triggered by the function key [MESSAGE], 20
Soft key transition triggered by the function key [OFFSET SETTING], 13, 15
Soft key transition triggered by the function key [POS], 3
Soft key transition triggered by the function key [PROG] (When the soft key [BG–EDT] is pressed in all modes), 11
Soft key transition triggered by the function key [PROG] in the EDIT mode, 6
Soft key transition triggered by the function key [PROG] in the HNDL, JOG, or REF mode, 9
Soft key transition triggered by the function key [PROG] in the MDI mode, 8
Soft key transition triggered by the function key [PROG] in the MEM mode, 4
Soft key transition triggered by the function key [PROG] in the TJOG or THDL mode, 10
Soft key transition triggered by the function key [SYSTEM], 17
Soft keys, 2
Software configuration screen, 27
SPC Alarms, 831
Specification, 449
Specification of PMC, 449
Spindle Alarms, 832
Spindle monitor screen, 705
Spindle setting and tuning screen, 702
Spindle setting screen, 702
Spindle tuning screen, 703
SRAM DATA BACKUP screen, 926
SRAM operation, 956
Stand–Alone Type *i* Series Hardware, 269
Starting the boot system, 916
Status Screen (160*i*/180*i*/210*i*), 962
Status screen display and setting, 149
Structure, 165
Sub–CPU Board, 193
Sub–CPU board, 289
Switching between the embedded Ethernet devices, 635
Symbol CAP*i* T Board, 307
System configuration screen, 25
System data check screen, 921
System data delete screen, 923
System data loading screen, 919
System data manipulation, 955
SYSTEM DATA SAVE screen, 924
System files and user files, 917

System reserve area of internal relay, 451
System screen, 17

≪T≫

The display on the LCD unit flashes, 754
Total Connection Diagrams, 170, 246
Total connection diagrams, 275
Troubleshooting, 660, 723
Tuning S analog voltage (D/A converter), 721

≪U≫

Units and printed circuit boards, 324
Using the DNC1/Ethernet function on a small network, 620
Using the FACTOLINK function on a small network, 613
Using the FOCAS1/Ethernet function on a small network, 619
Using the FTP file transfer function on a small network, 626

≪W≫

Warning Interface for the α*i* Spindle, 711
Warning screen displayed when an option is changed, 124
Warning screen displayed when system software is replaced (system label check error), 126
Waveform diagnostic function, 100
Waveform diagnostic parameter screen, 101

Revision Record

FANUC Series 16*i*/160*i*/160*i*s/18*i*/180*i*/180*i*s/21*i*/210*i*/210*i*s−MODEL B MAINTENANCE MANUAL (B−63525EN)

Edition	Date	Contents	Edition	Date	Contents
02	Nov., 2001	• Addition of following models: – Series 160*i*s/180*i*s/210*i*s–MODEL B – Series 18*i*/180*i*/180*i*s–MB5 • Addition of functions • Addition of alarms			
01	Jun., 2001				

- *No part of this manual may be reproduced in any form.*
- *All specifications and designs are subject to change without notice.*